LYNE

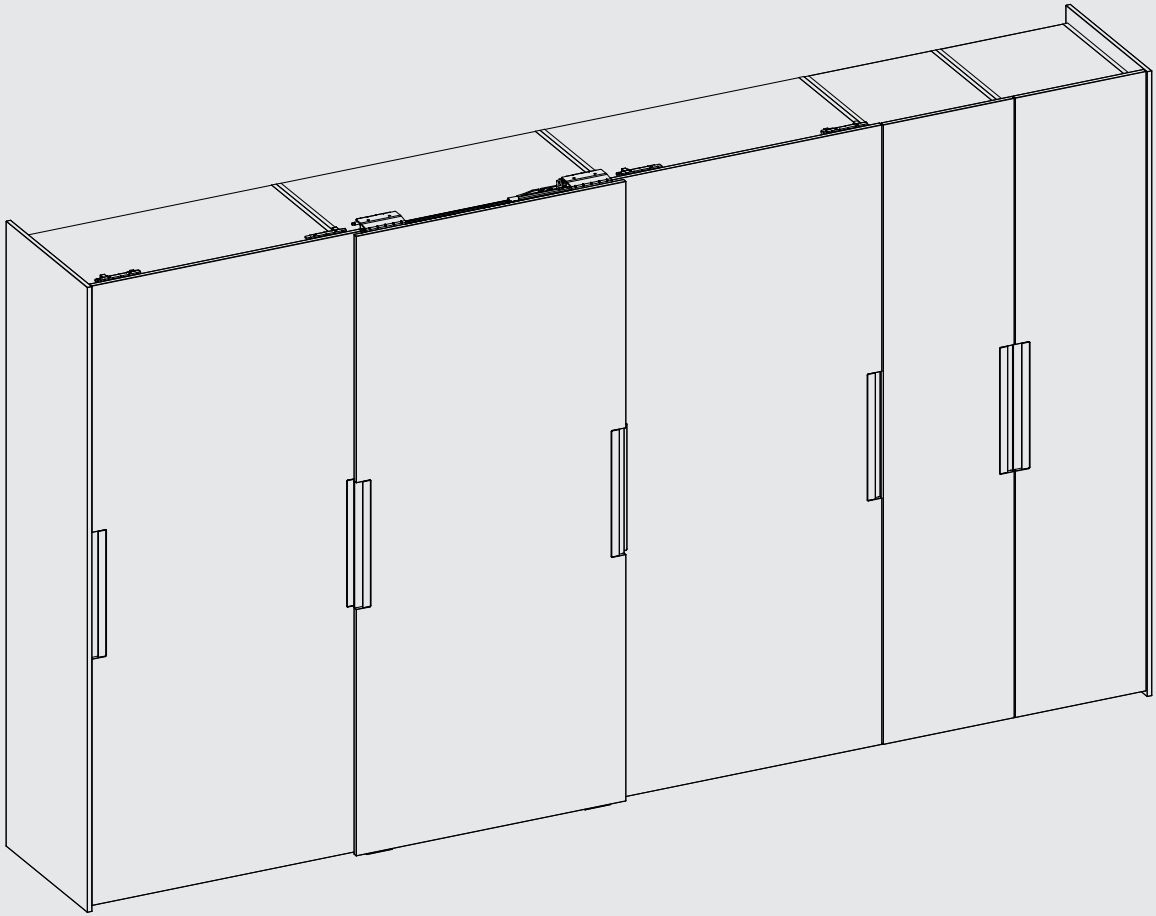

MYCS

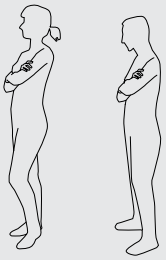

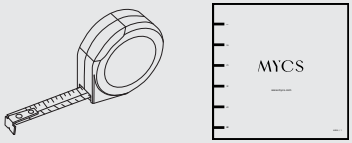

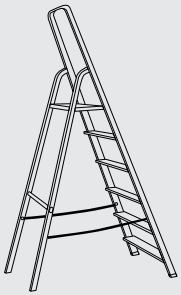

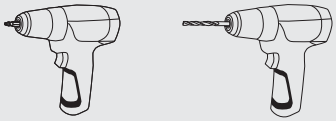

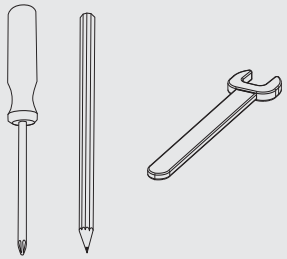

10043		**10048** 4x25		**10054** 3,5x16	
10044 3x16		**10049**		**10055**	
10045	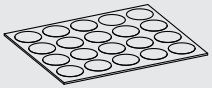	**10050**		**10056** 8x20	
10046		**10051** **10052**		**10057**	
10047 8x30		**10053**		**10058**	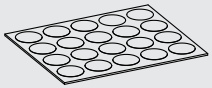

10059 3x16		**10060** 4,5x50		**10066** 4x16	
10061		**10068**		**10067** 3,5x20	
10062		**901.300.01**		**10017**	
10069		**10063**		**10070**	
10071 4x16		**10072** 3x20		**10079**	
10081		**10064**		**10065**	
10080		**102.119.06**		**102.119.07**	

10074
10075

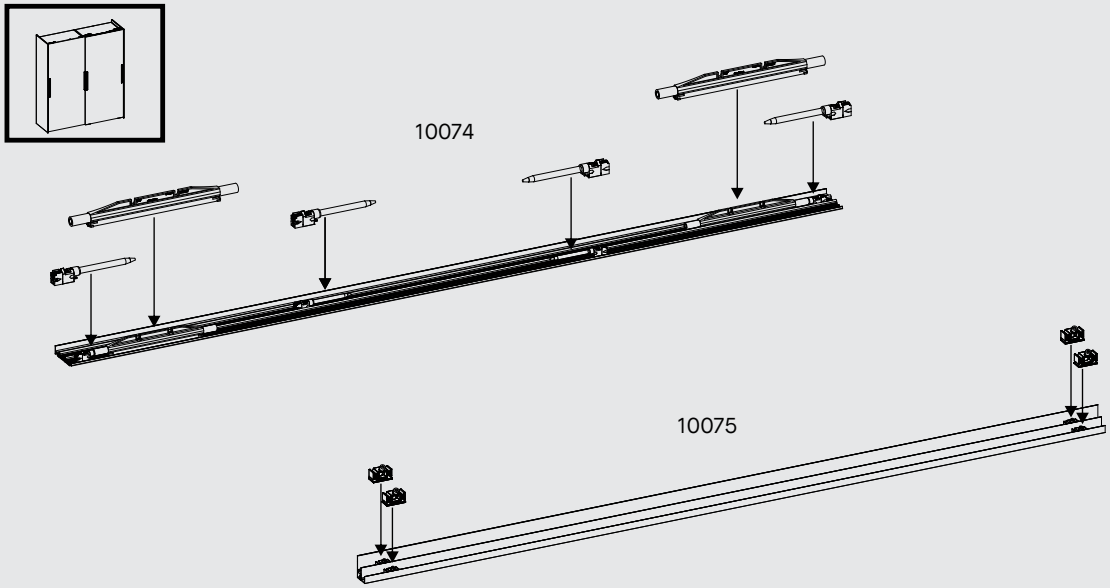

10077

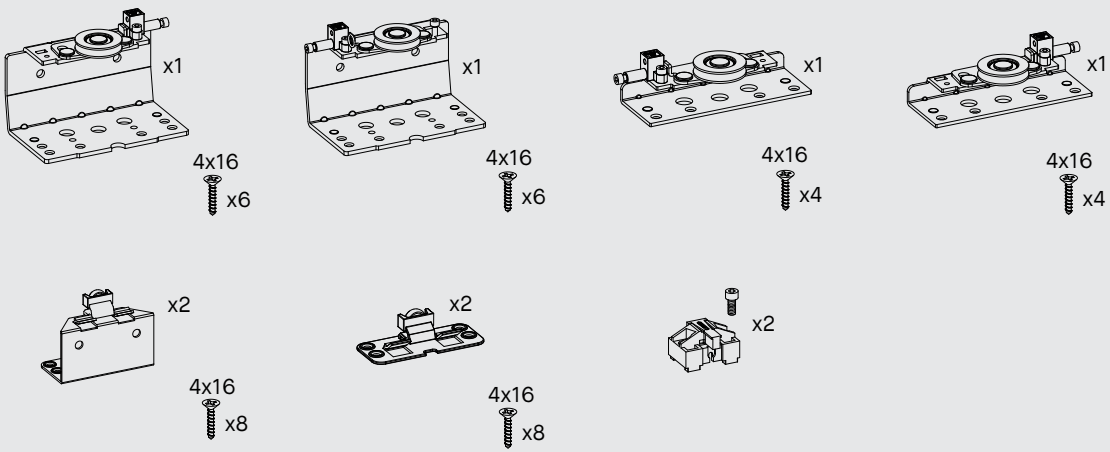

10073
10076

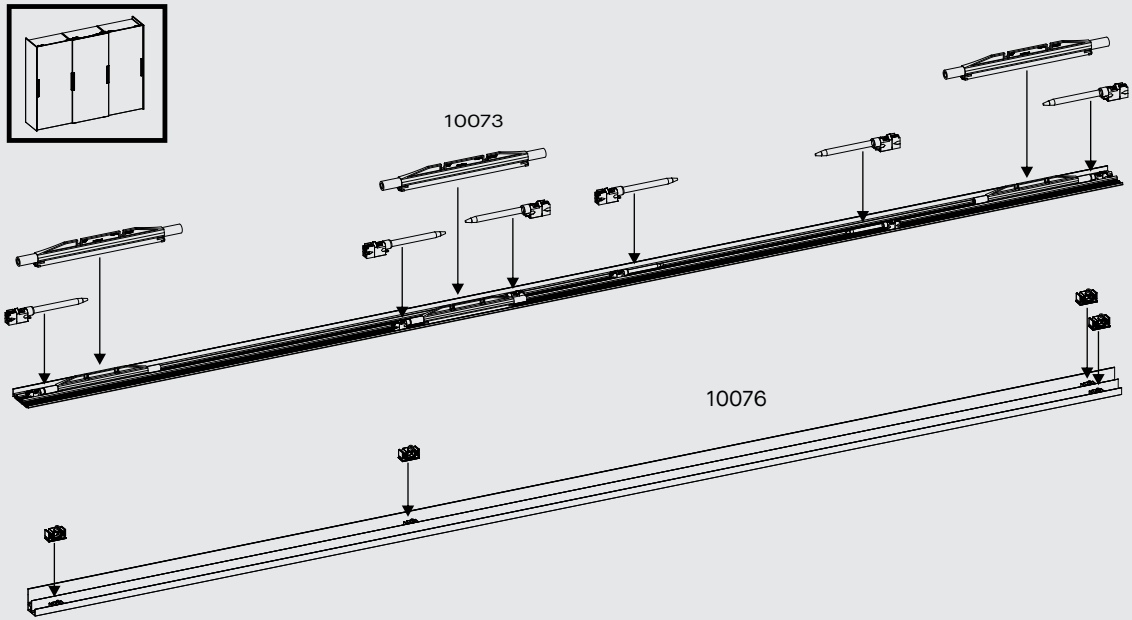

10078

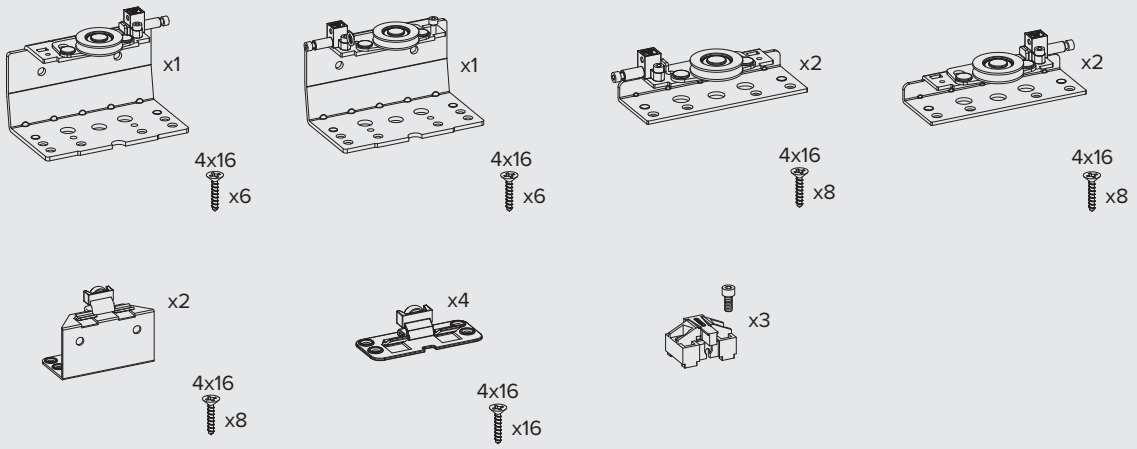

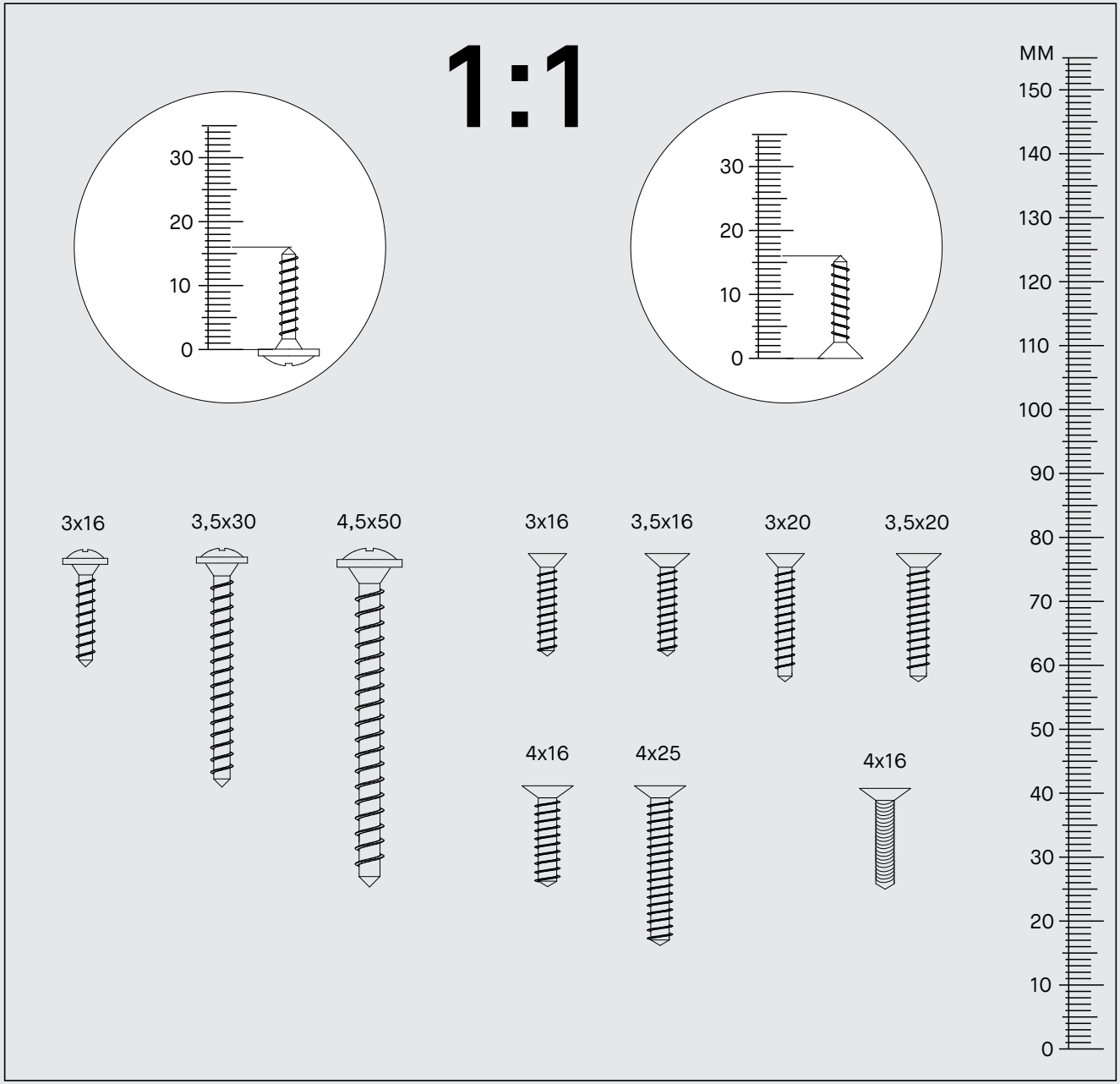
1:1
MM
3x16
3,5x30
4,5x50
3x16
3,5x16
3x20
3,5x20
4x16
4x25
4x16

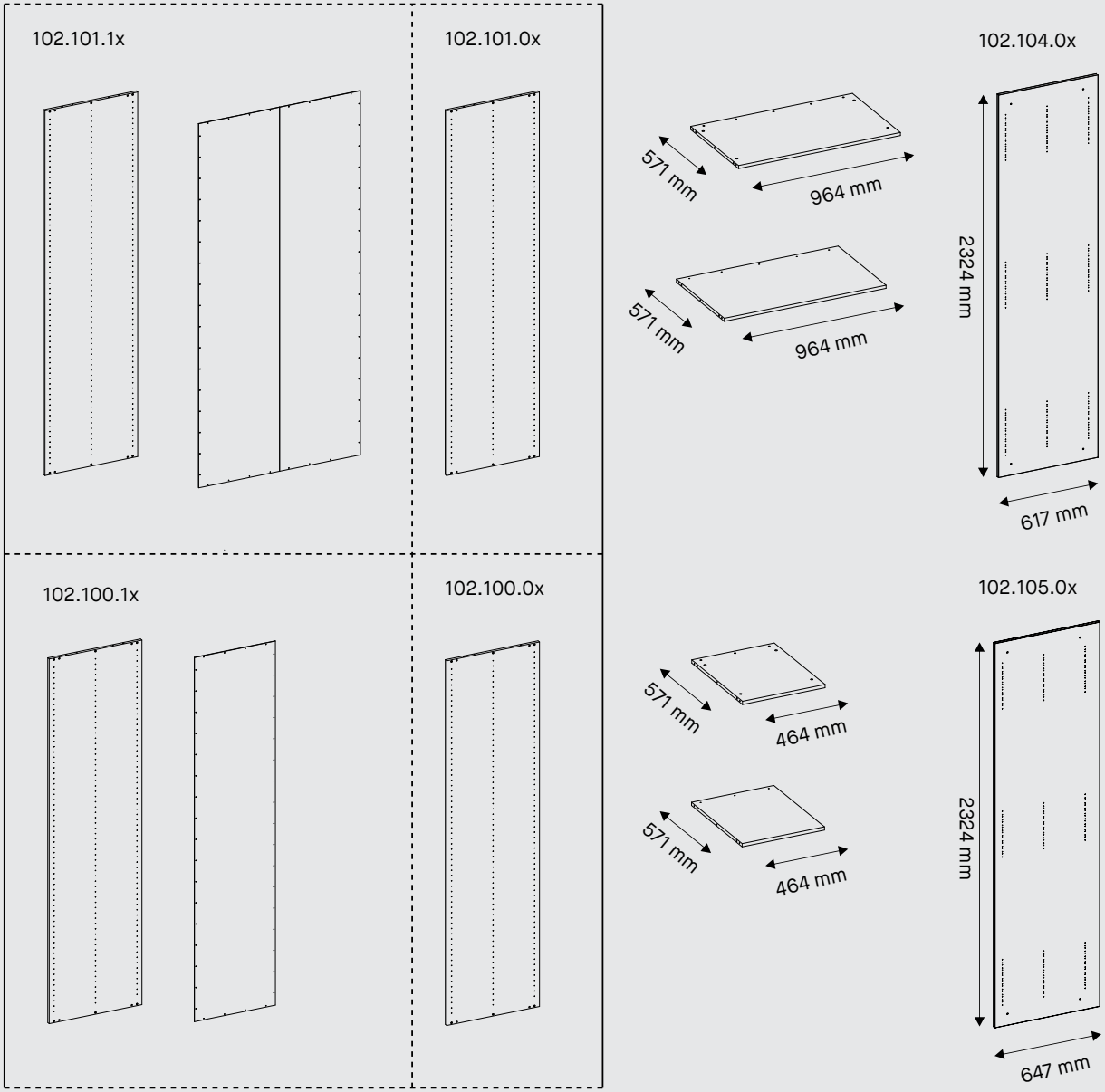
102.101.1x
102.101.0x
102.104.0x
571 mm
964 mm
571 mm
964 mm
2324 mm
617 mm
102.100.1x
102.100.0x
102.105.0x
571 mm
464 mm
571 mm
464 mm
2324 mm
647 mm

102.112.00

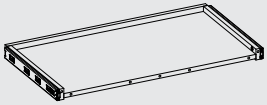

102.119.05

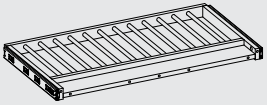

102.111.00

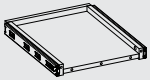

102.119.04

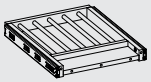

102.112.01

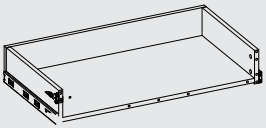

102.111.01

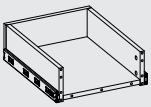

102.103.0x

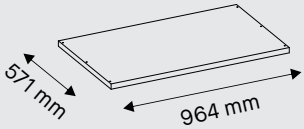

102.102.0x

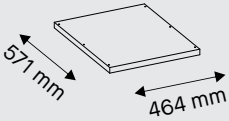

102.13.0x1

102.115.0x

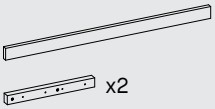

102.117.0x

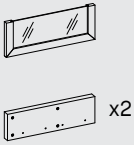

102.114.0x

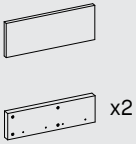

102.118.0x

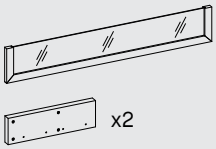

102.116.0x

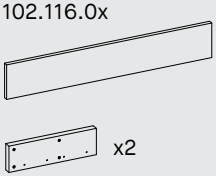

102.106.0x

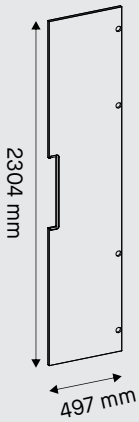

102.107.0x

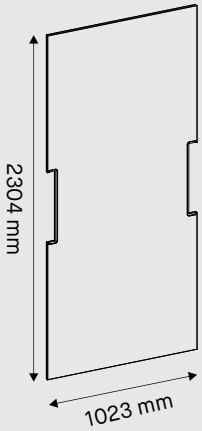

102.109.0x

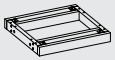

102.108.0x

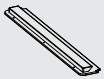

102.110.0x

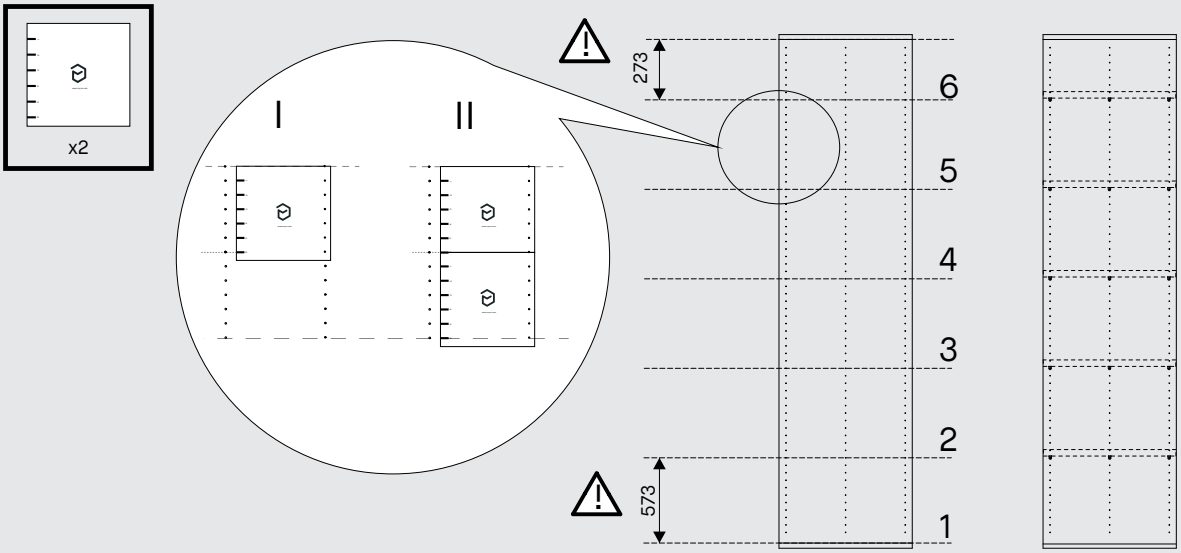
x2
I
II
273
573
6
5
4
3
2
1

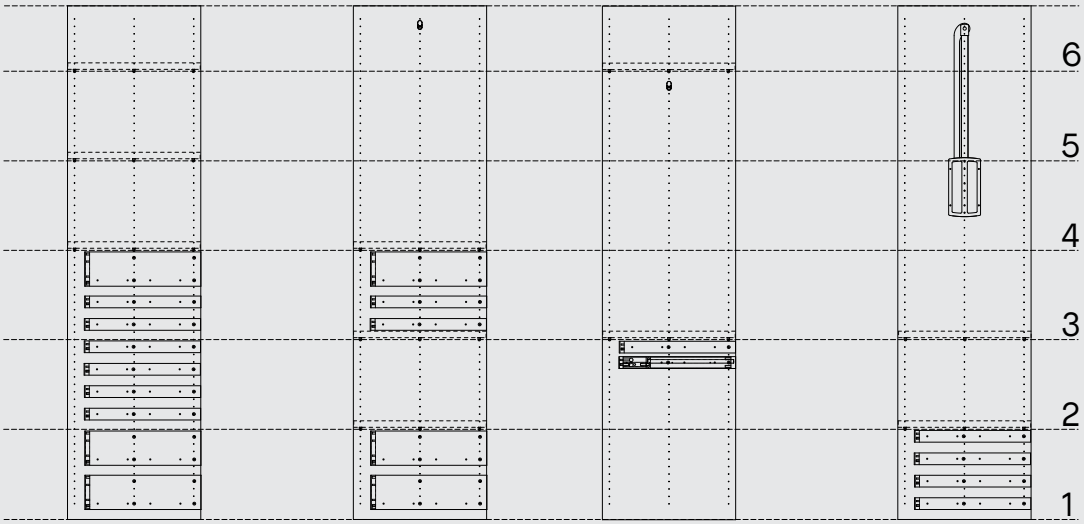
6
5
4
3
2
1

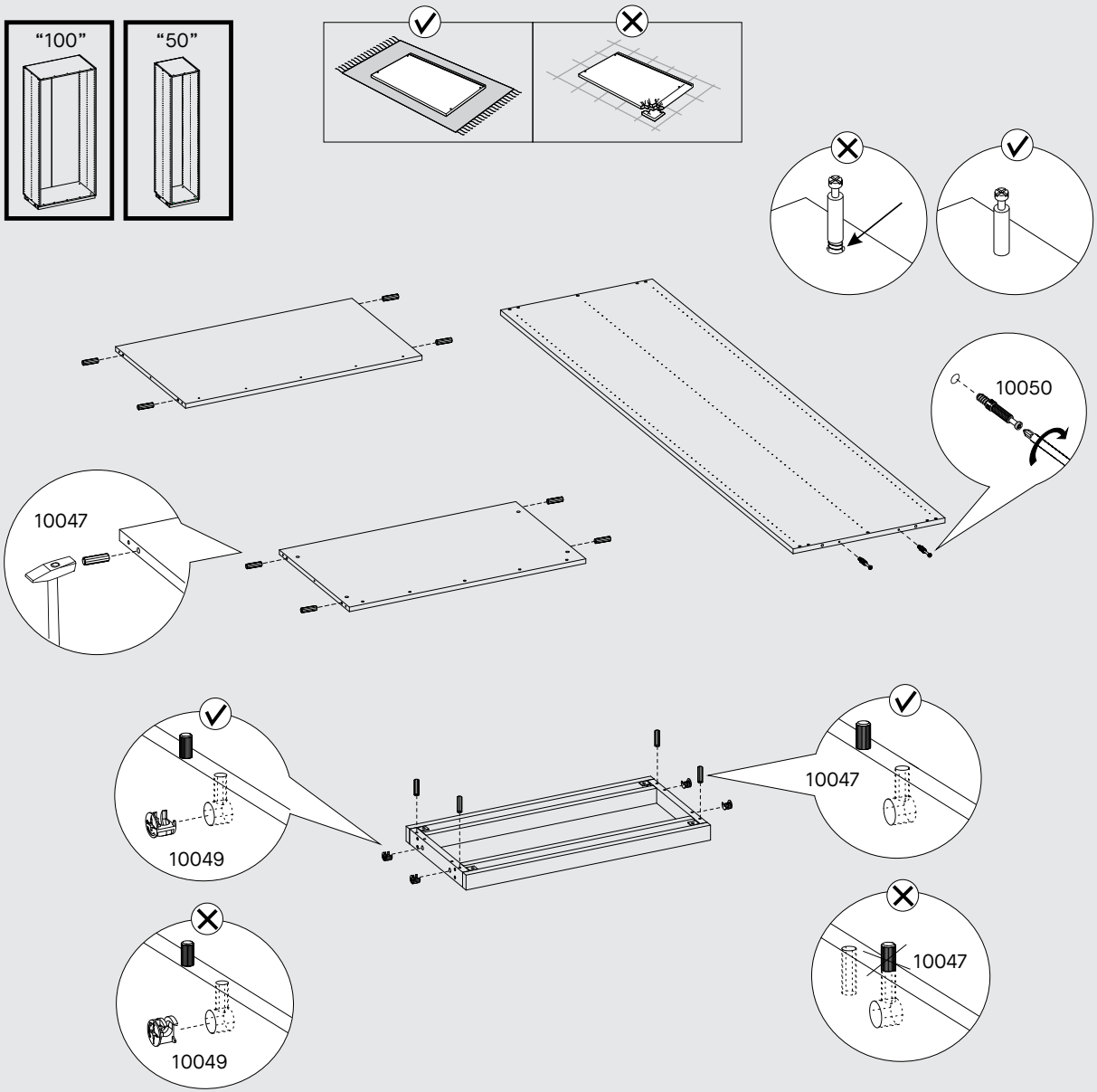
“100”
“50”
10050
10047
10049
10047
10049
10047

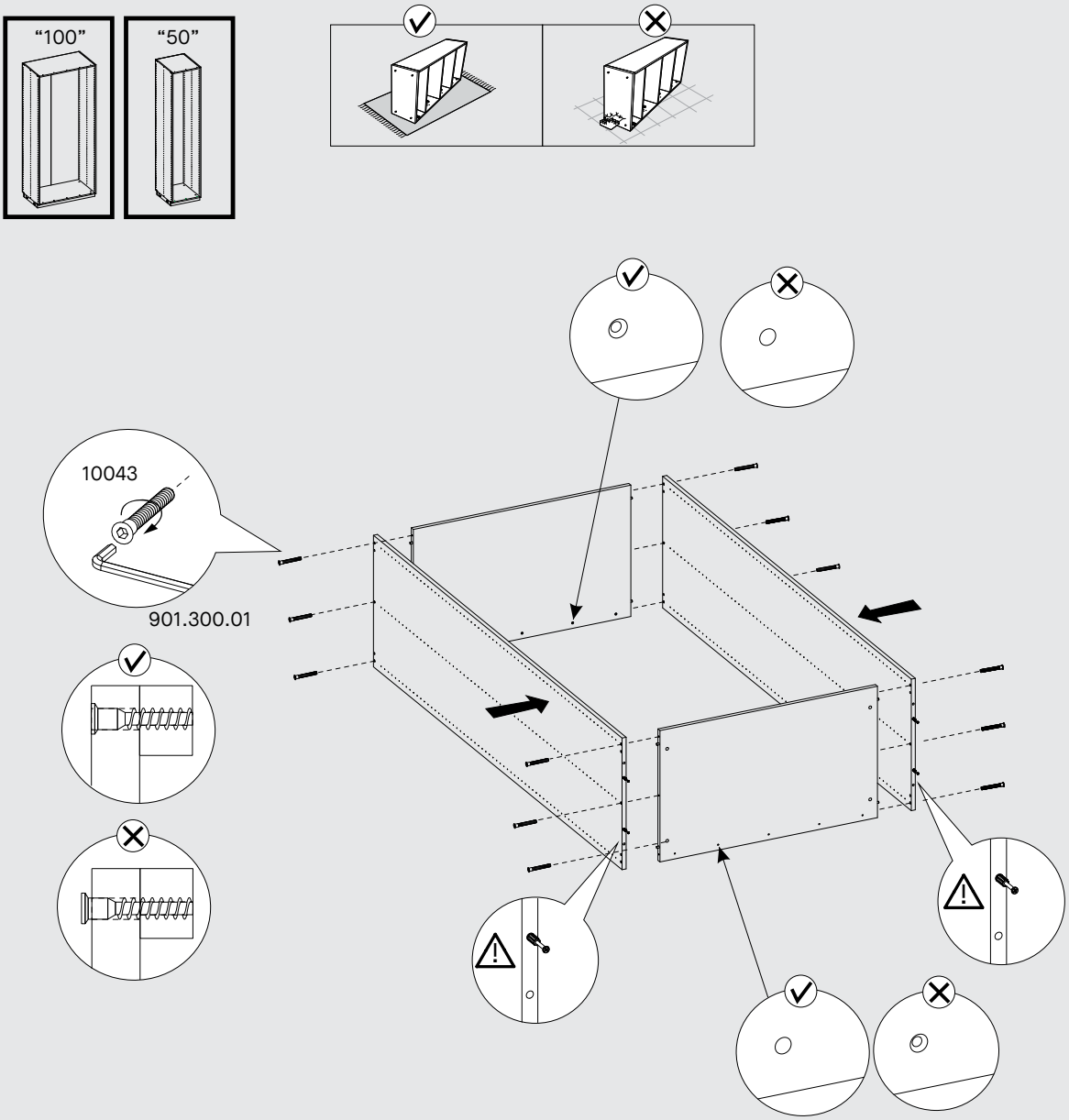
“100”
“50”
10043
901.300.01

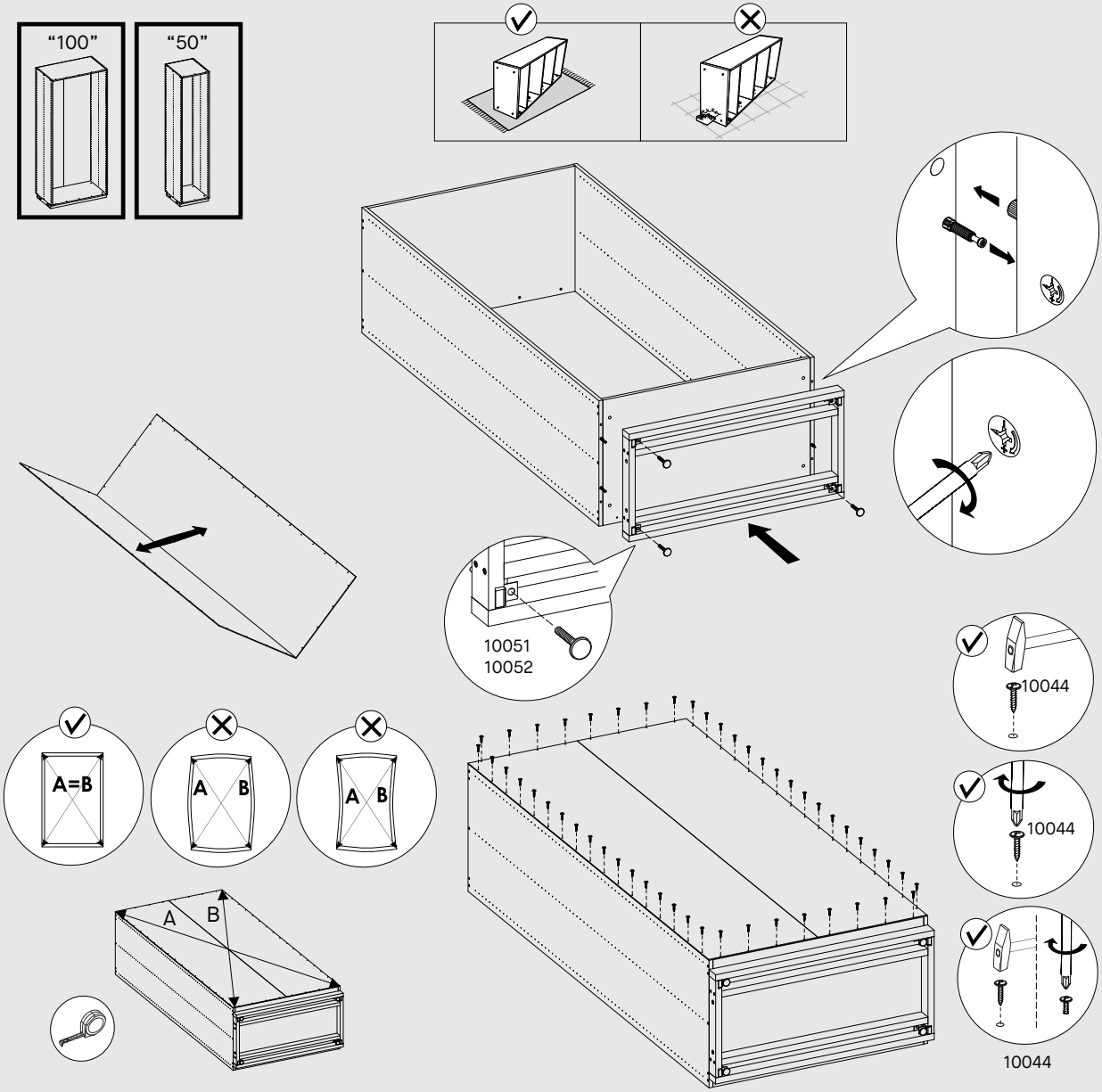
“100”
“50”
10051
10052
A=B
A
B
A
B
A
B
10044
10044
10044

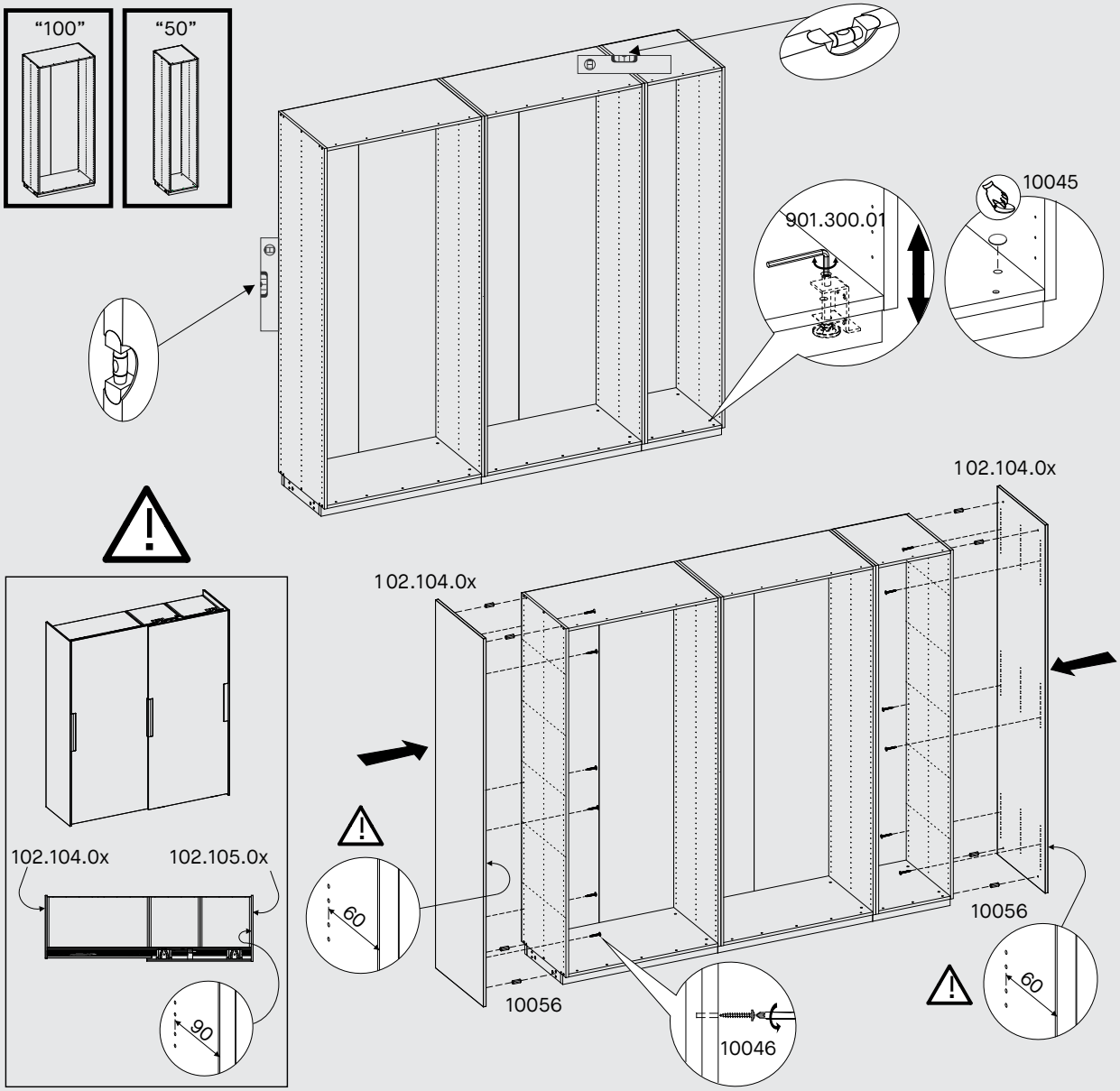
“100”
“50”
901.300.01
10045
102.104.0x
102.104.0x
102.104.0x
102.105.0x
60
90
10056
10046
10056
60

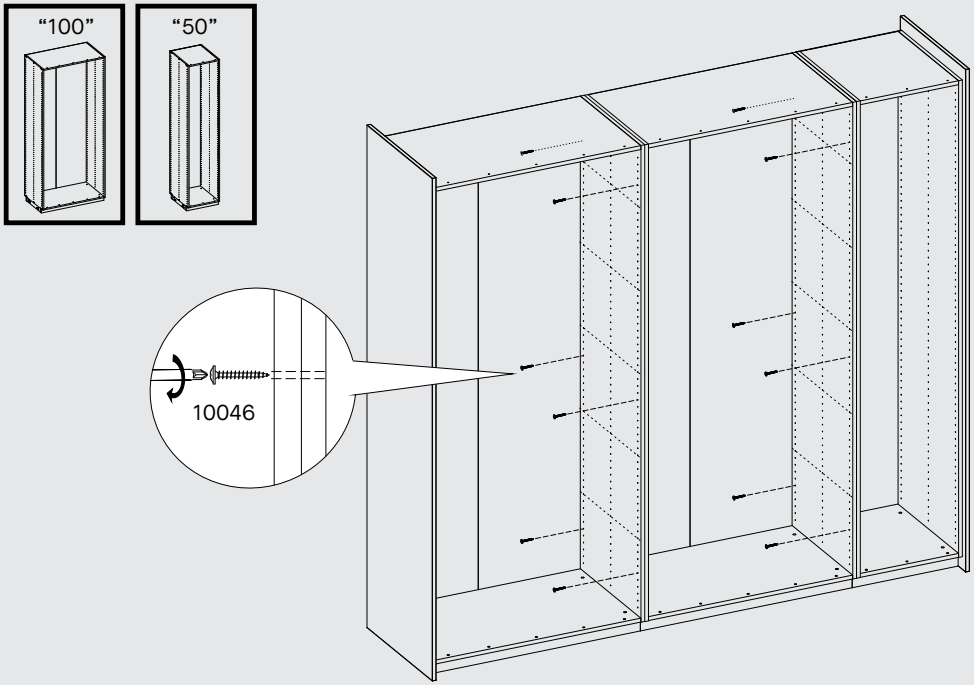
“100”
“50”
10046

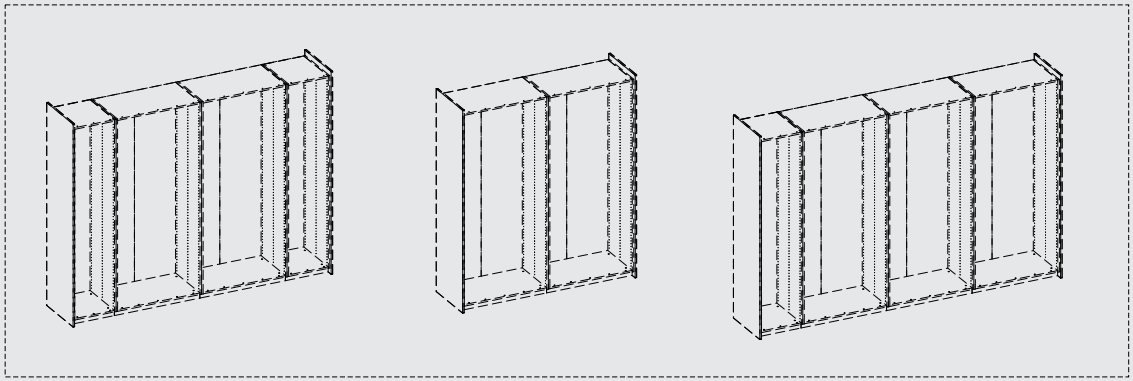

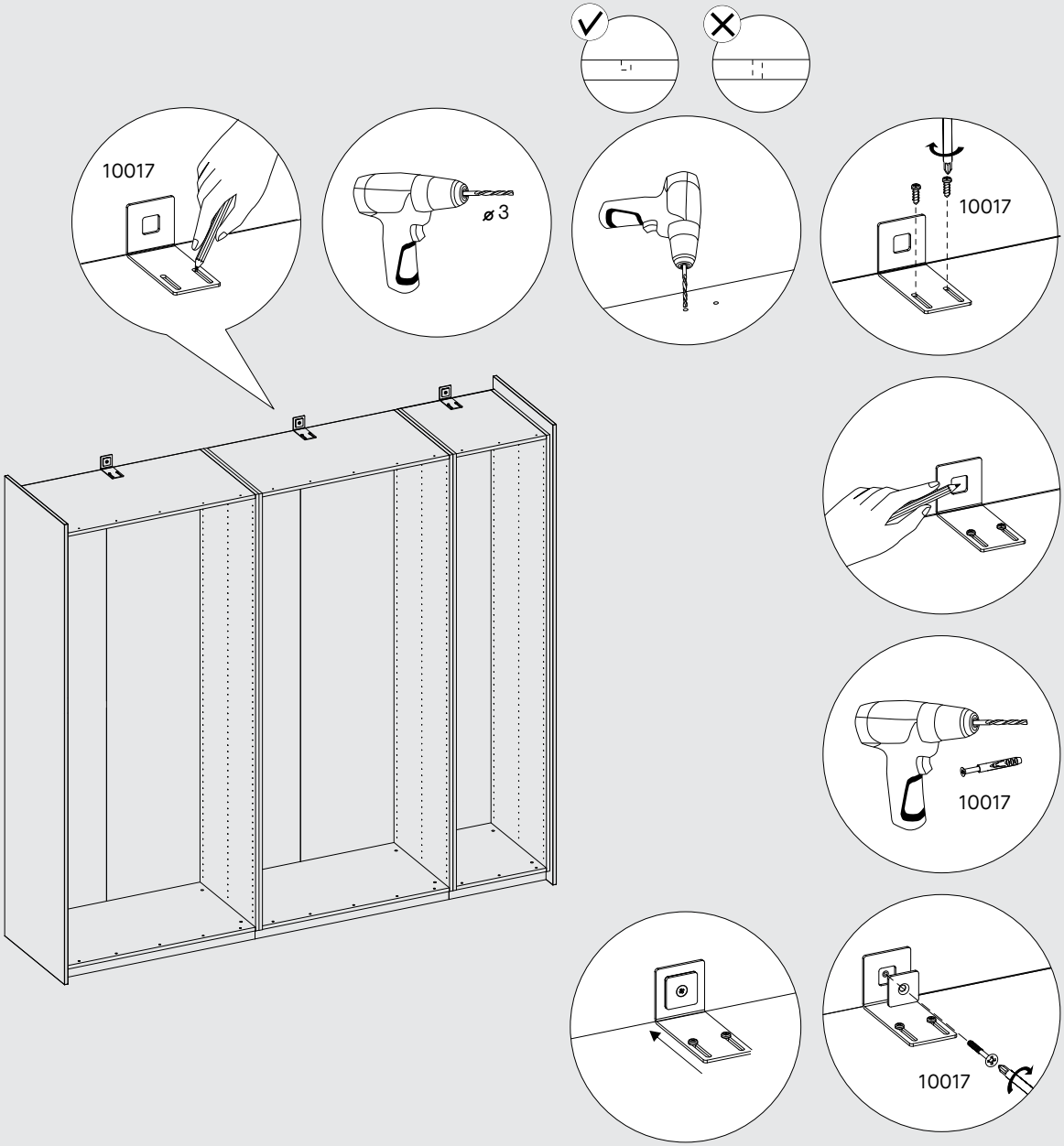
10017
⌀ 3
10017
10017
10017

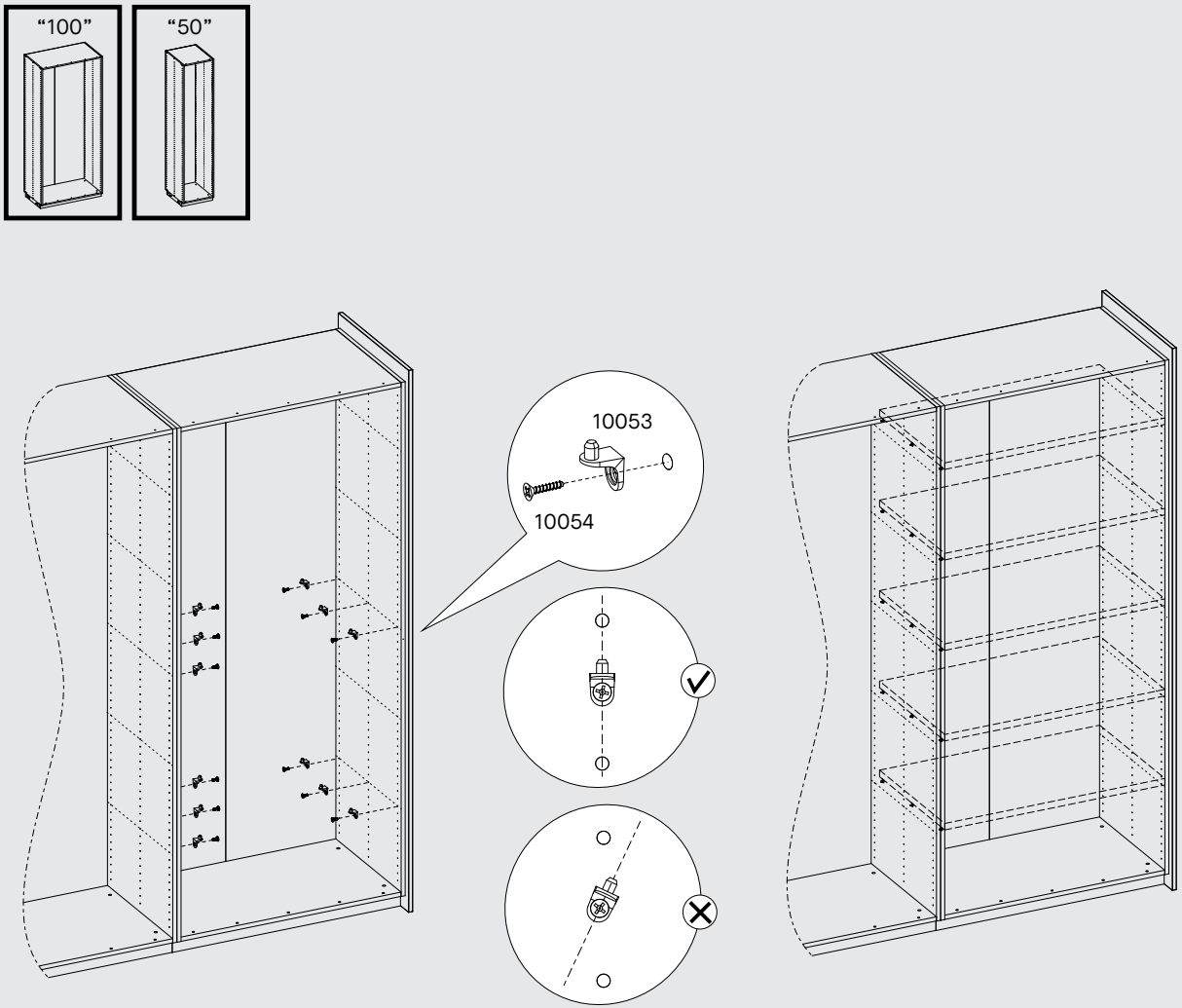
“100”
“50”
10053
10054

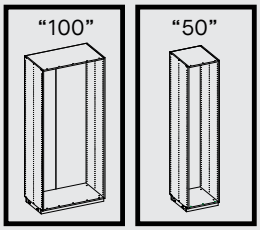
“100”
“50”

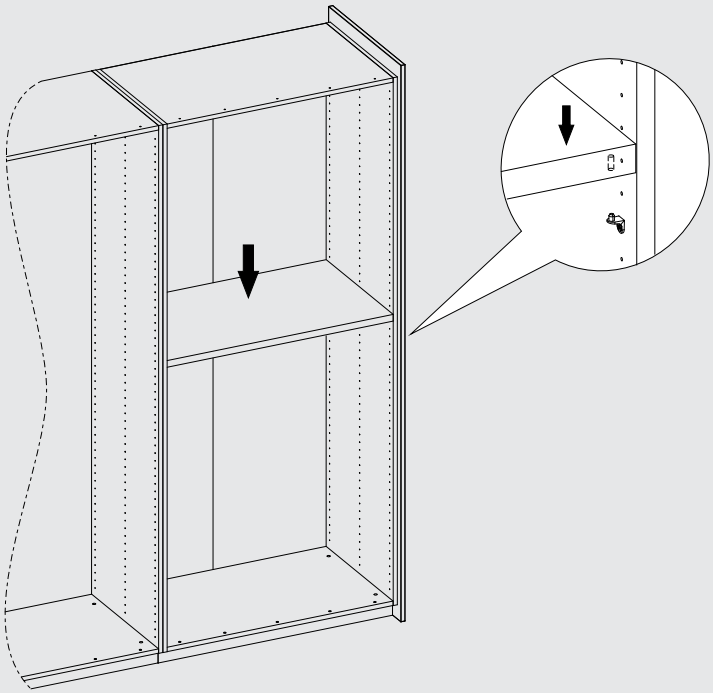

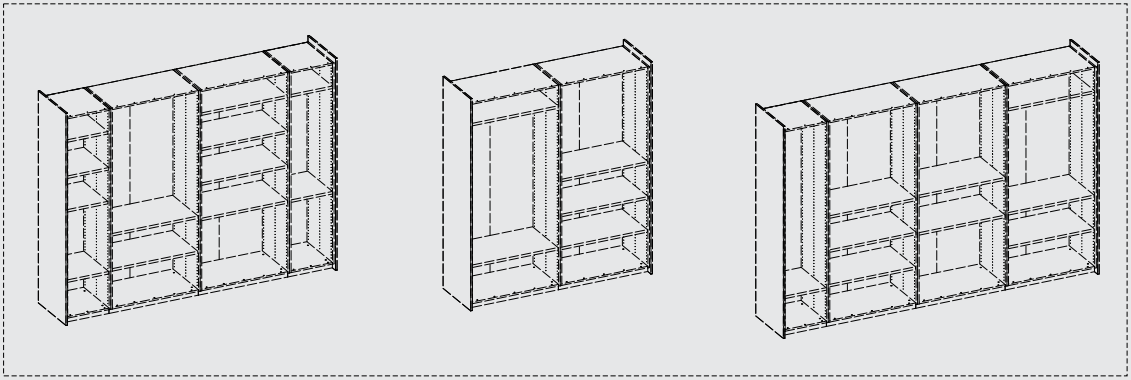

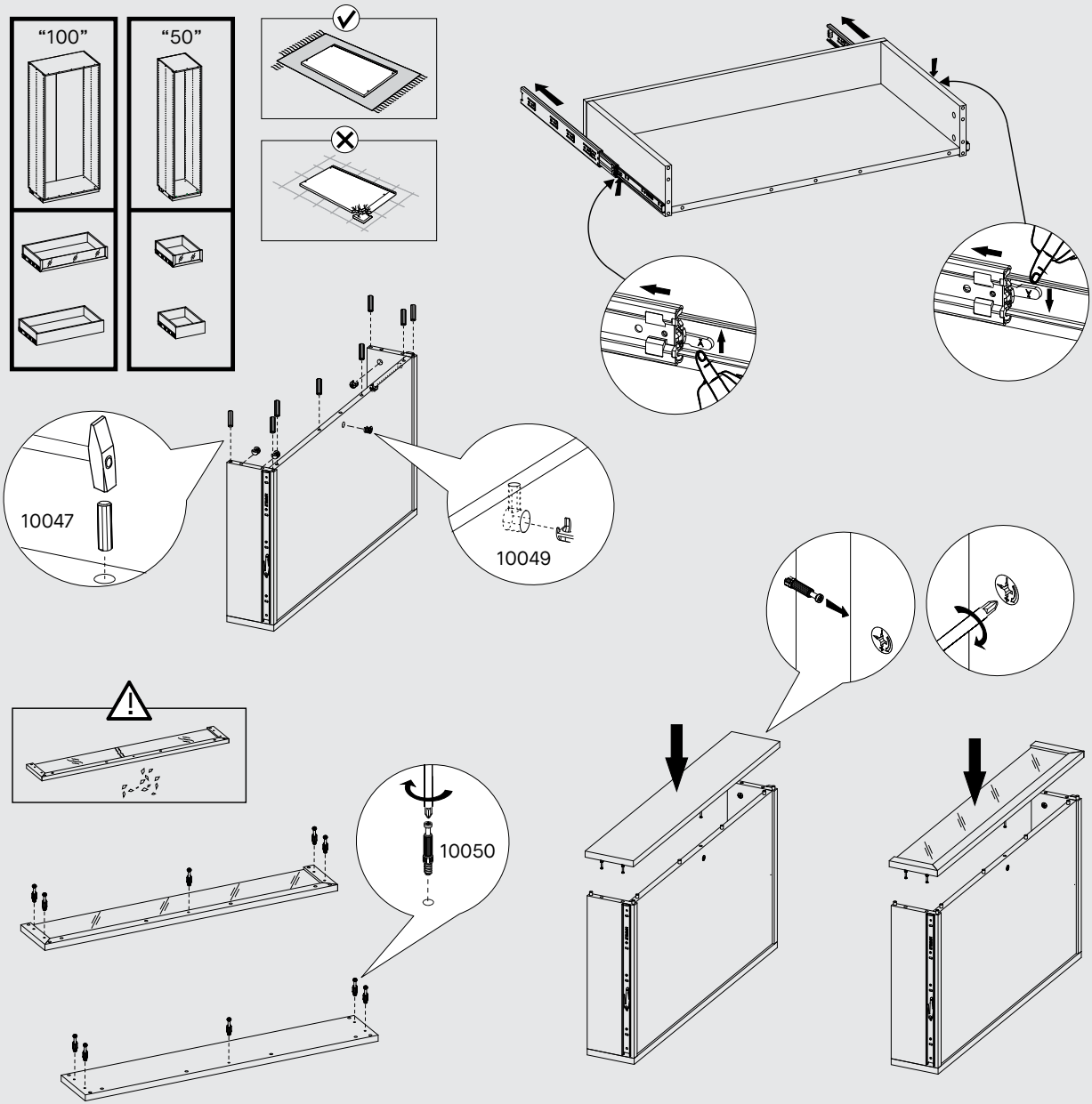
“100”
“50”
10047
10049
10050

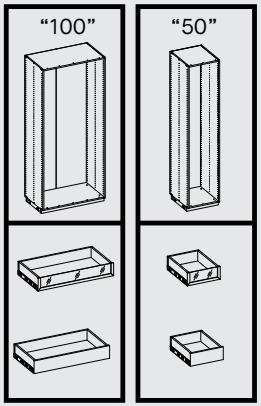
“100”
“50”

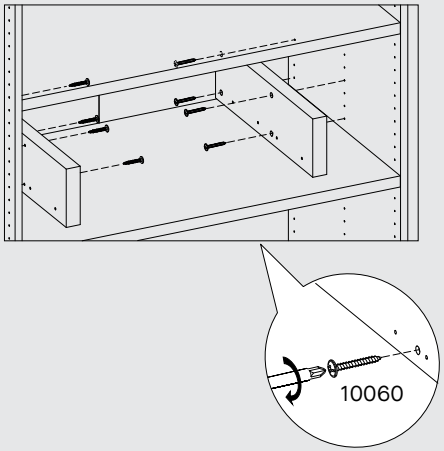
10060

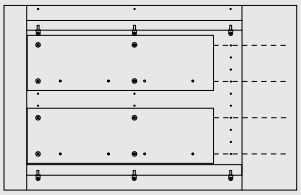

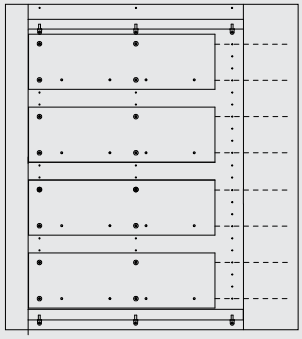

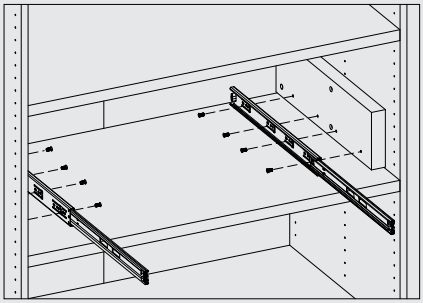

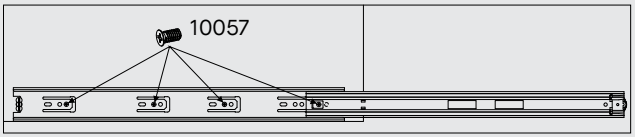
10057

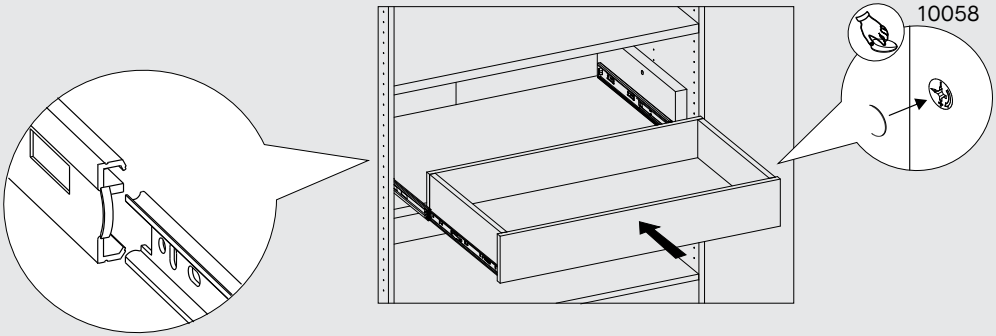
10058

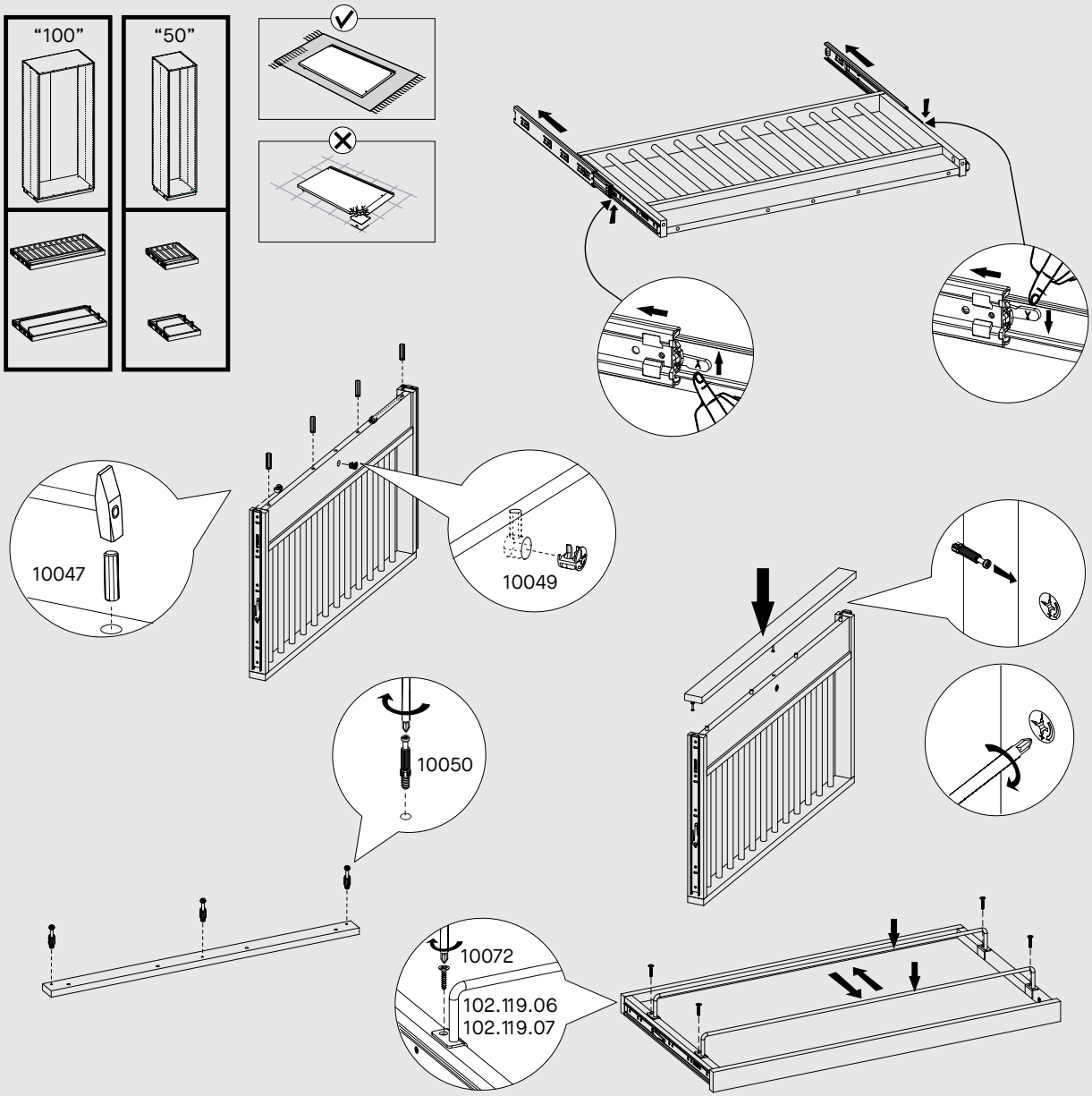
“100”
“50”
10047
10049
10050
10072
102.119.06
102.119.07

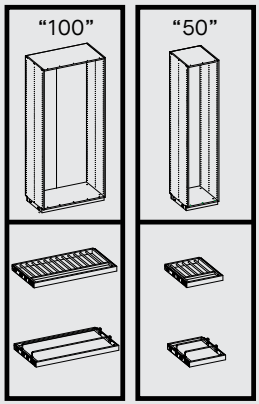
“100”
“50”

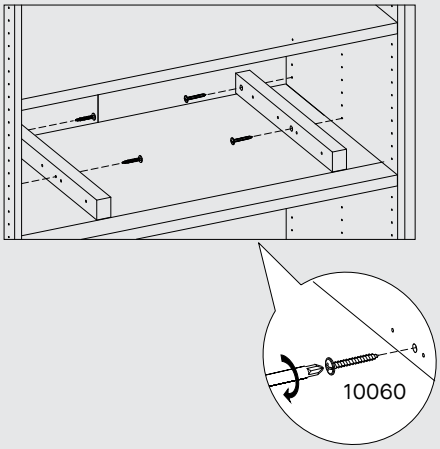
10060

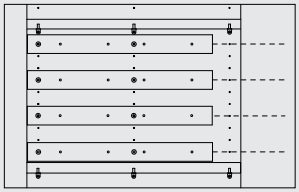

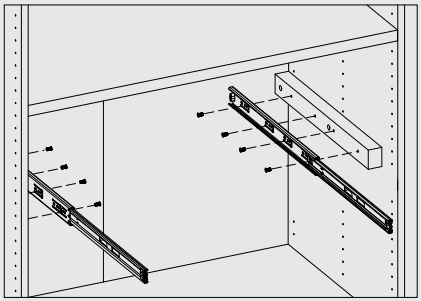

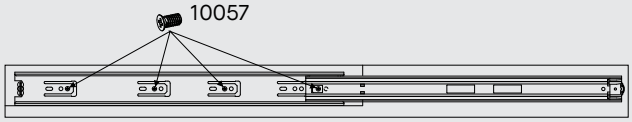
10057

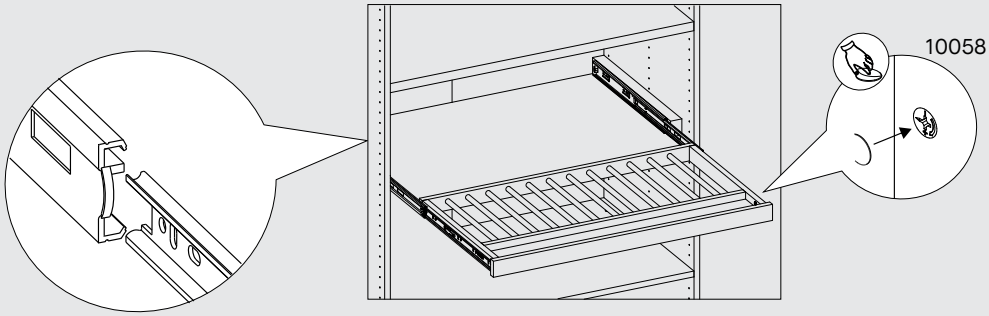
10058

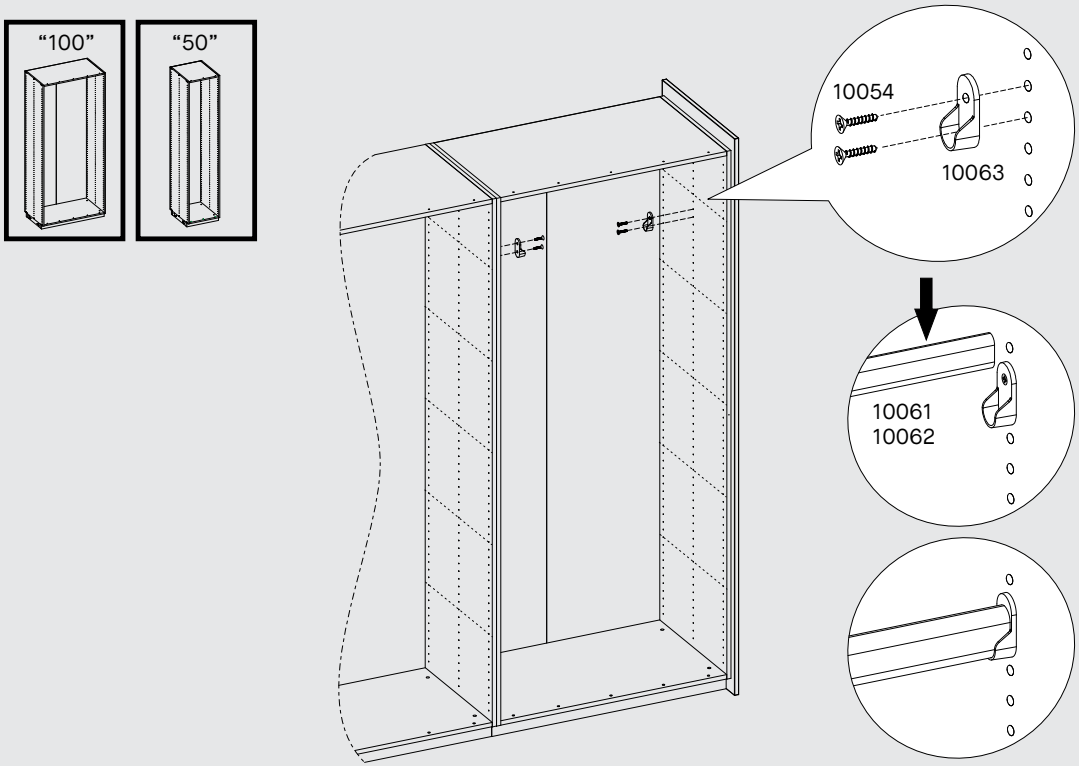
“100”
“50”
10054
10063
10061
10062

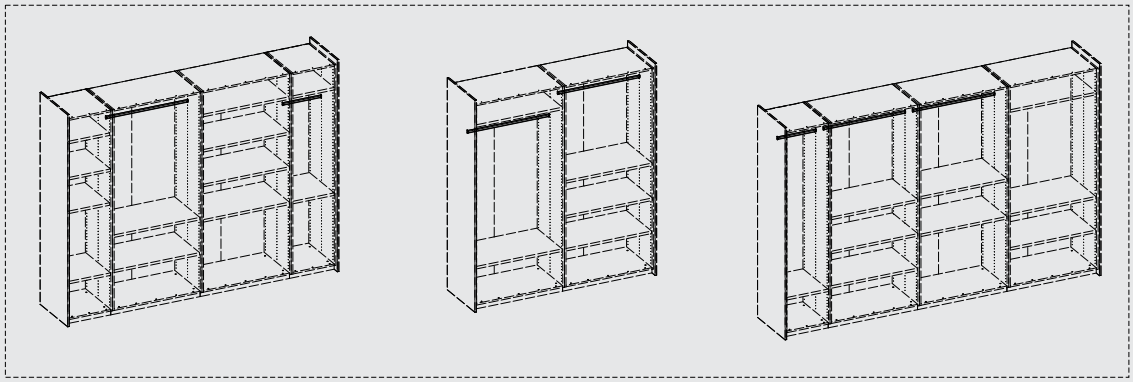

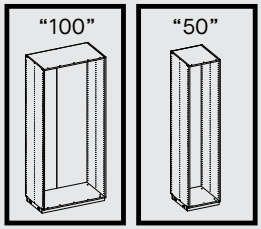
“100”
“50”

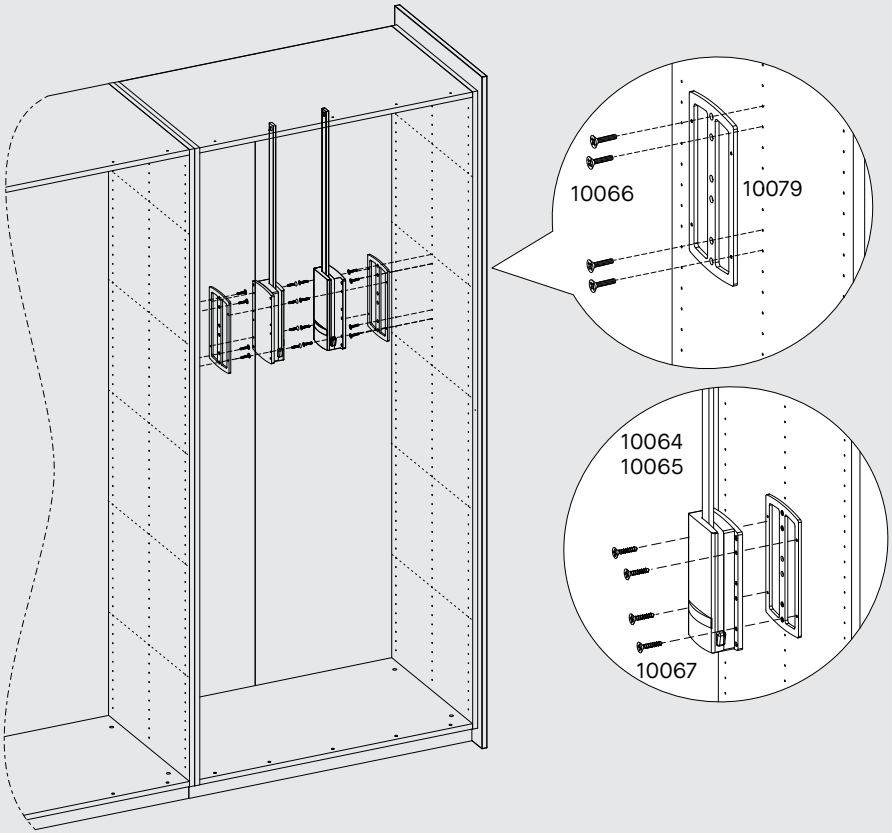
10066
10079
10064
10065
10067

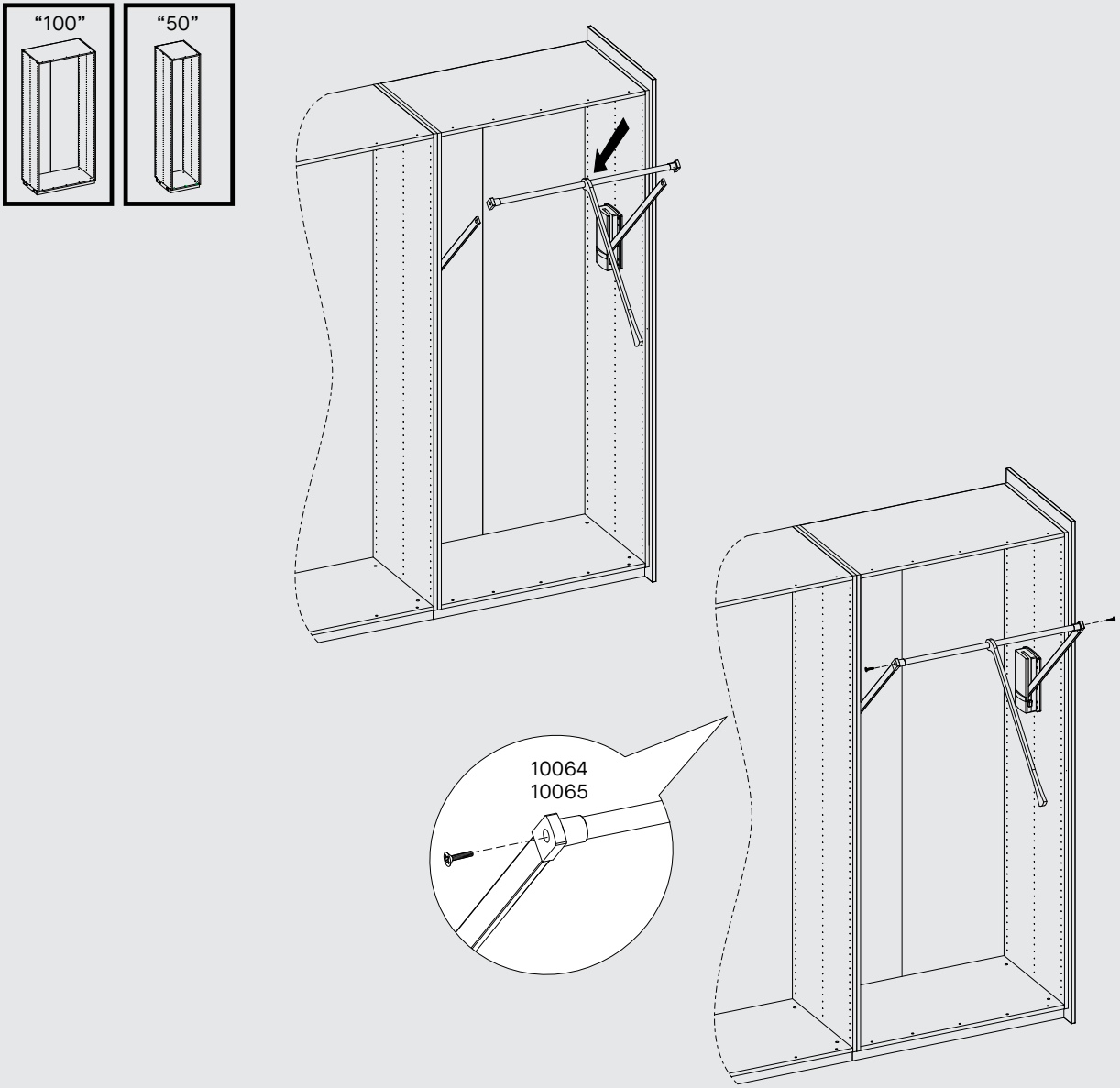
“100”
“50”
10064
10065

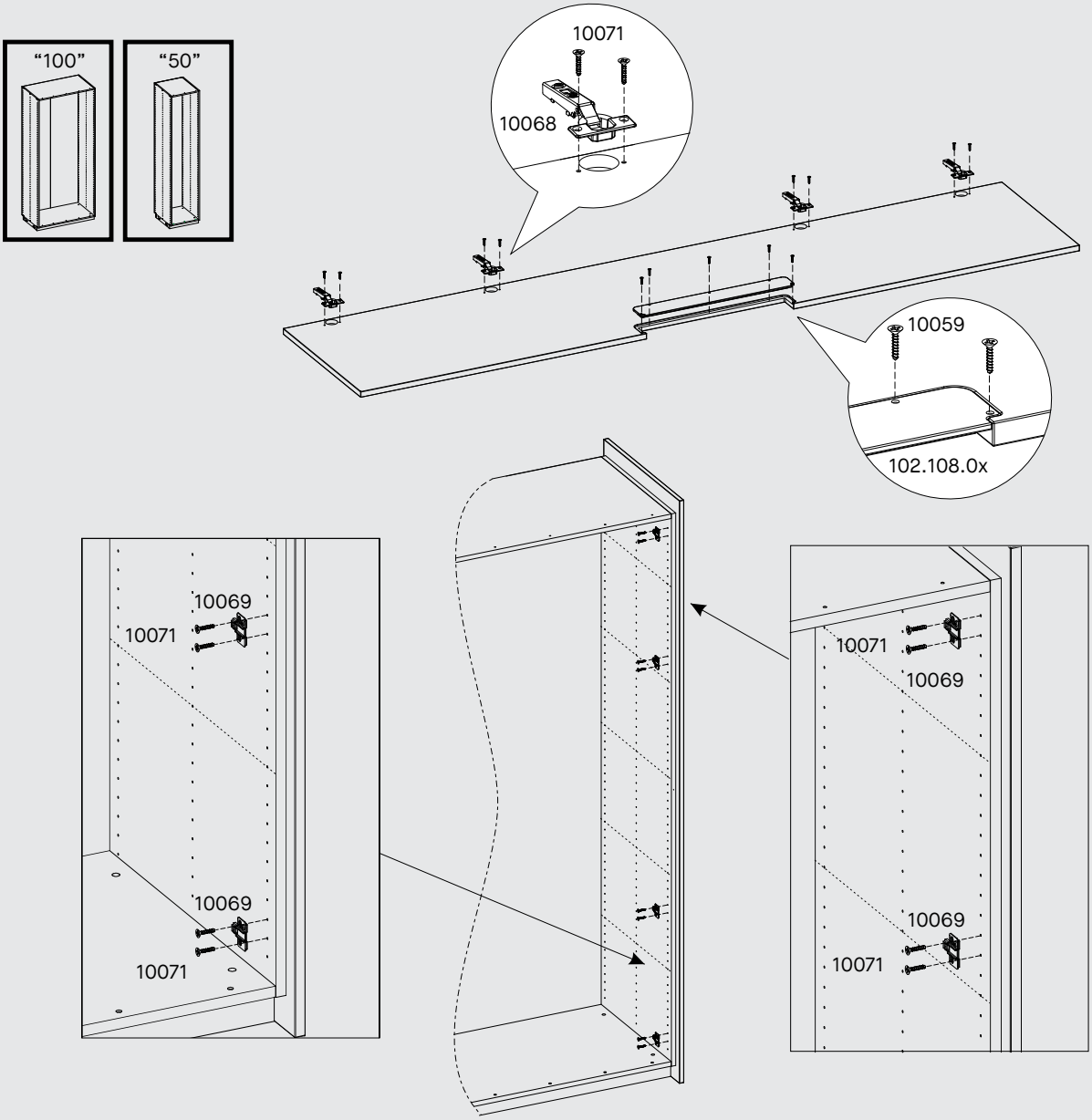
“100”
“50”
10071
10068
10059
102.108.0x
10069
10071
10069
10071
10071
10069
10069
10071

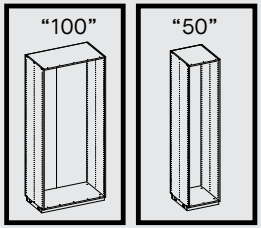
“100”
“50”

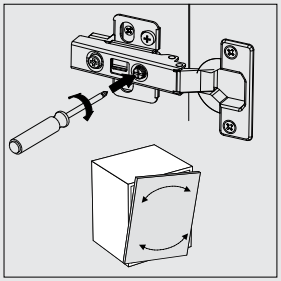

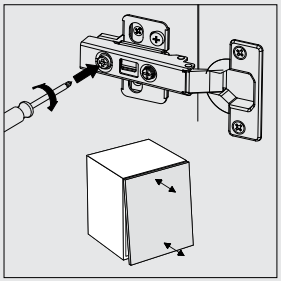

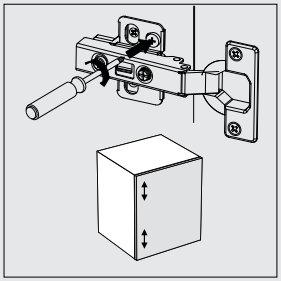

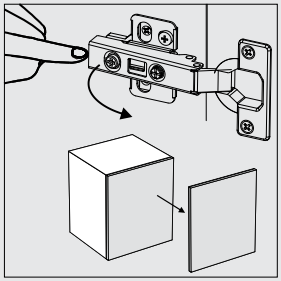

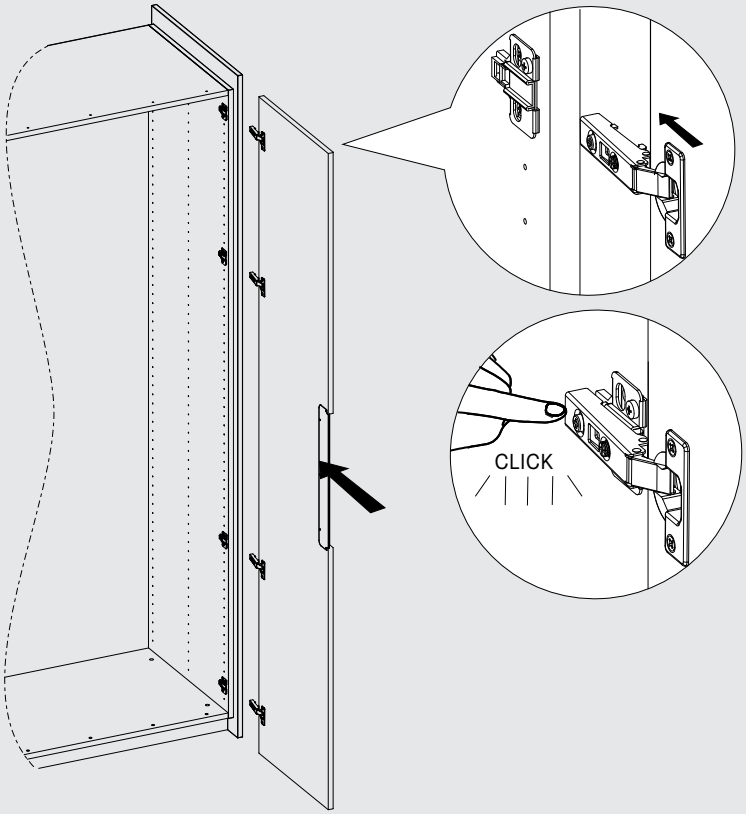
CLICK

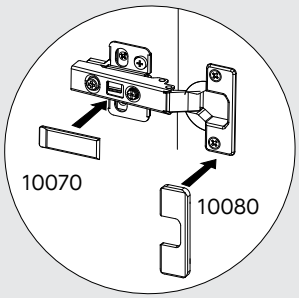
10070
10080

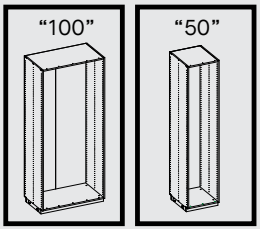
“100”
“50”

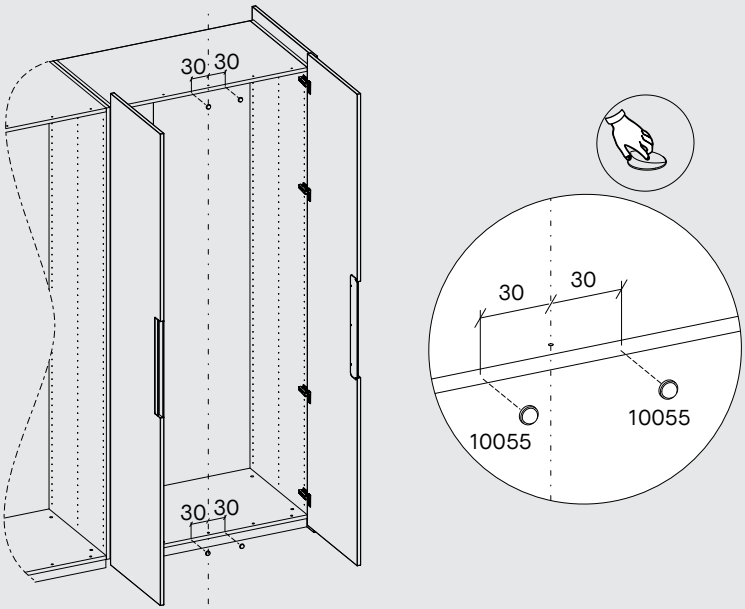
30 30
30 30
30
30
10055
10055

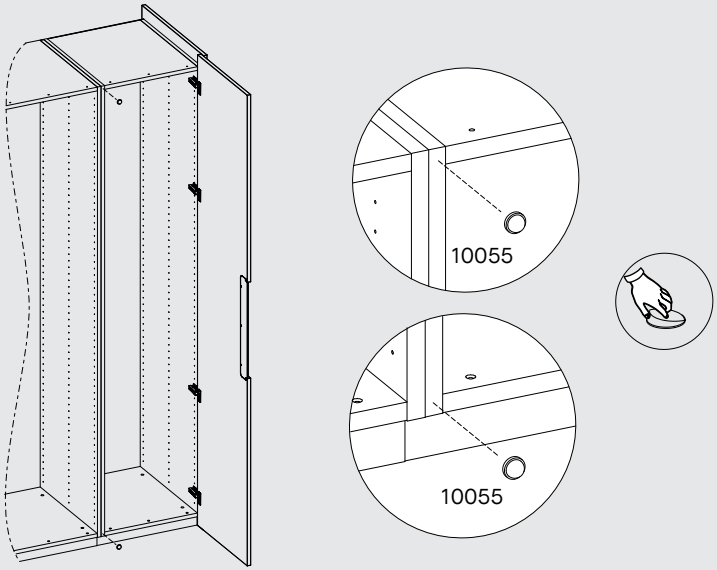
10055
10055

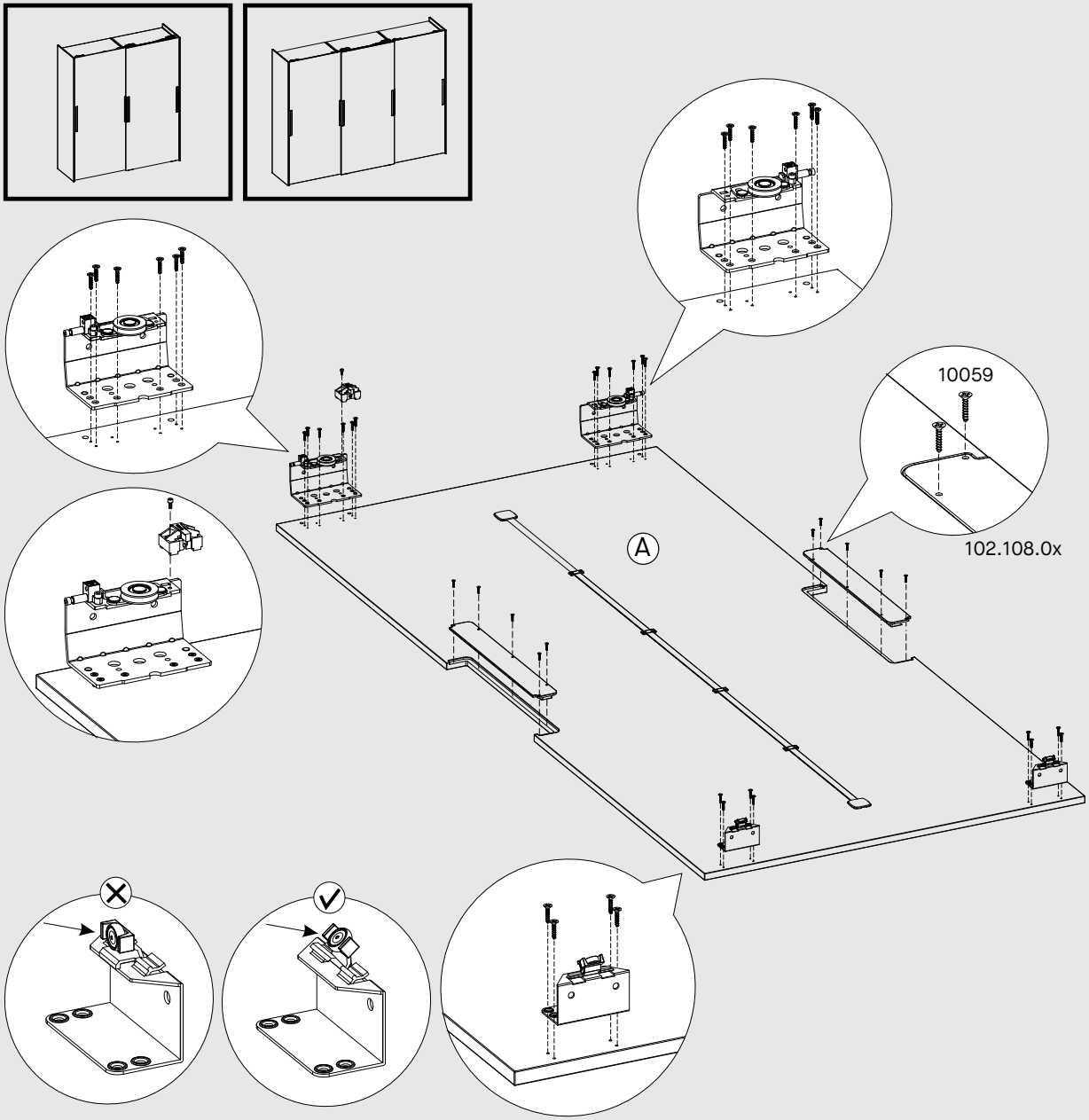
10059
102.108.0x
A

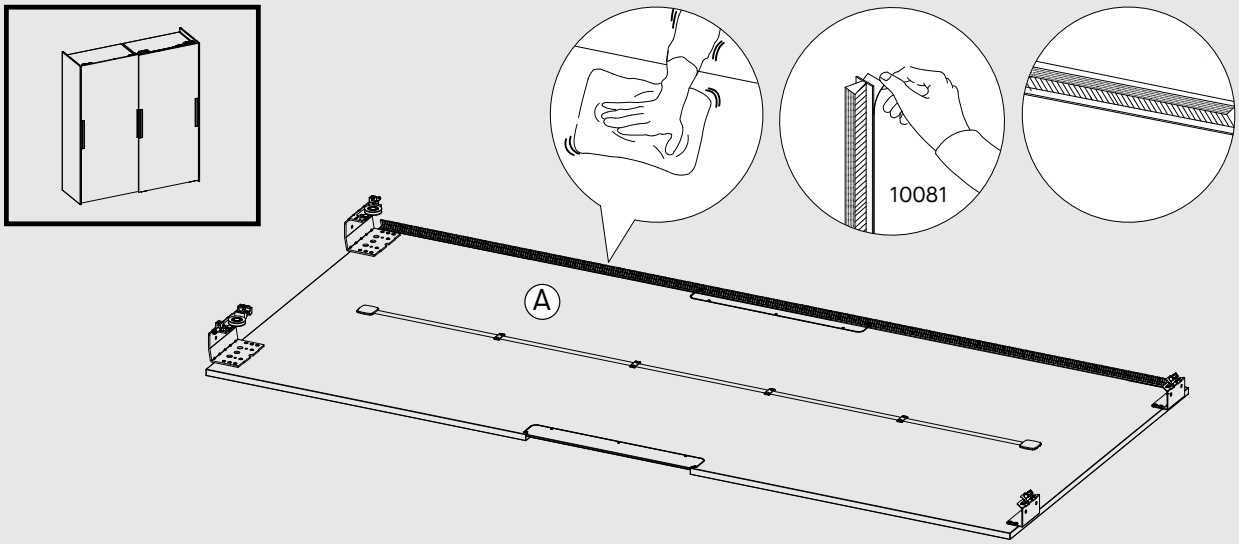
10081
A

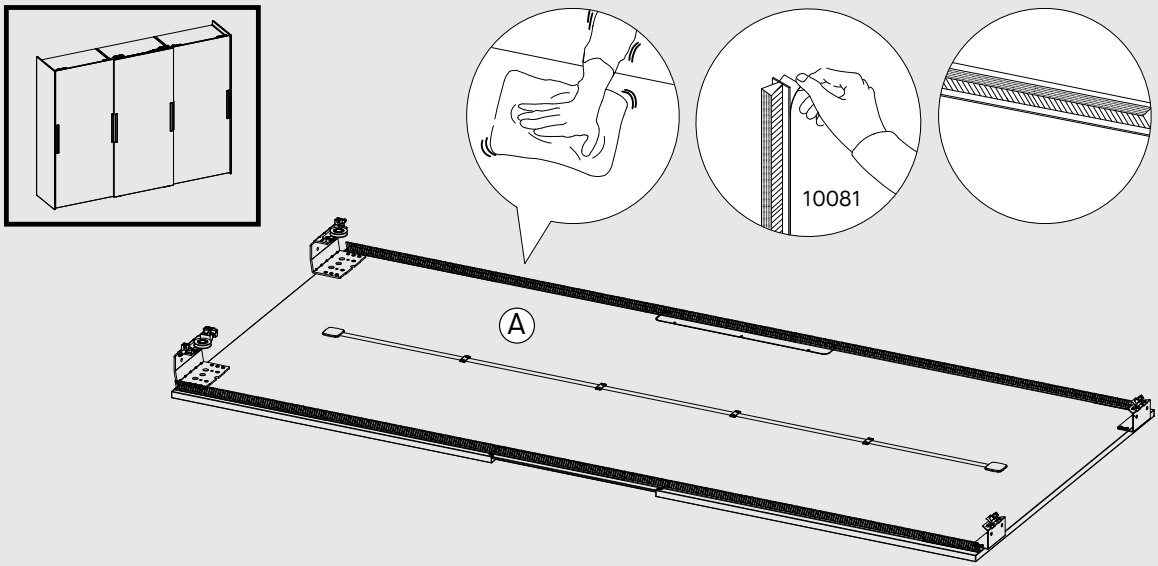
10081
A

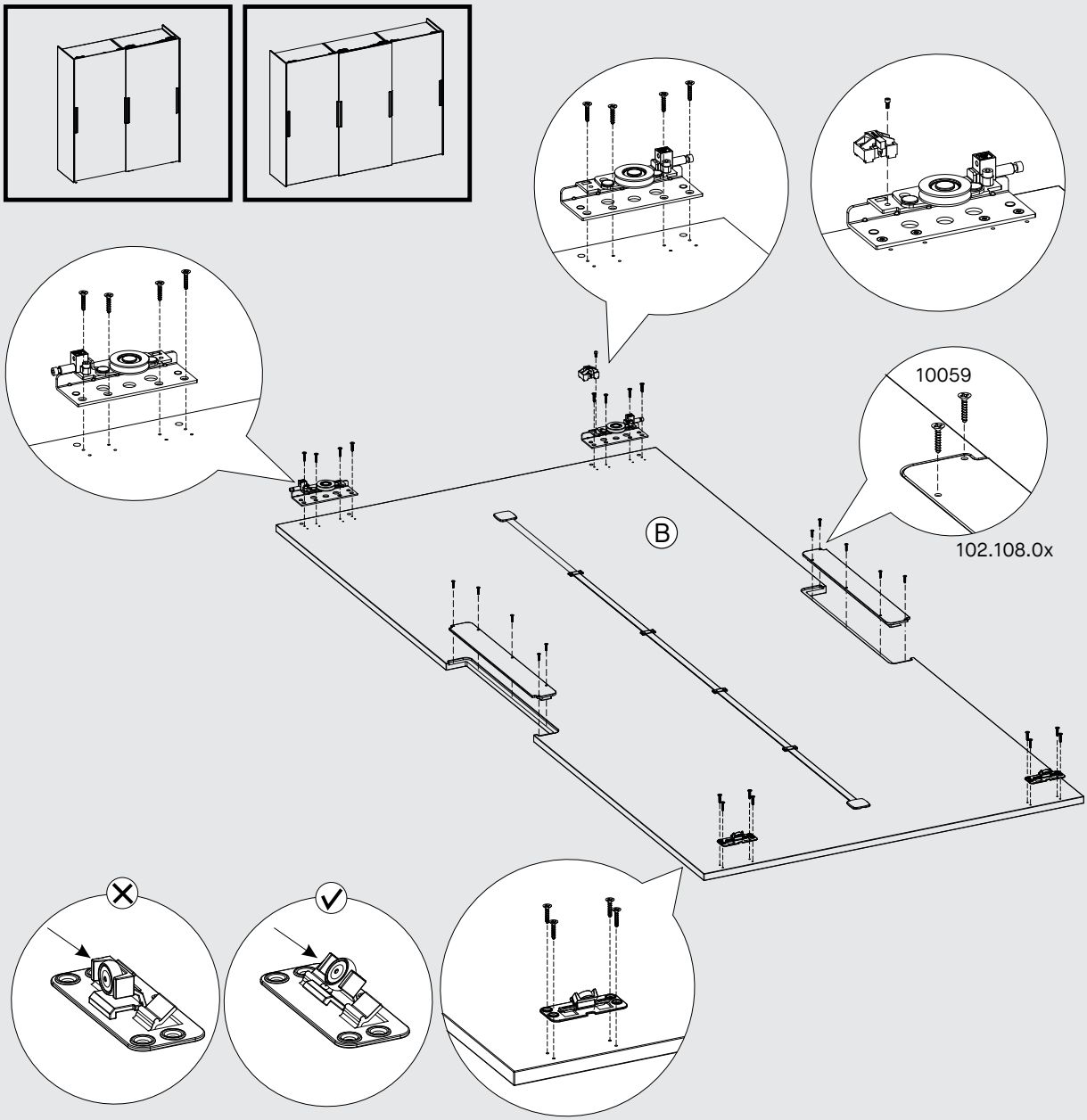
10059
102.108.0x
B

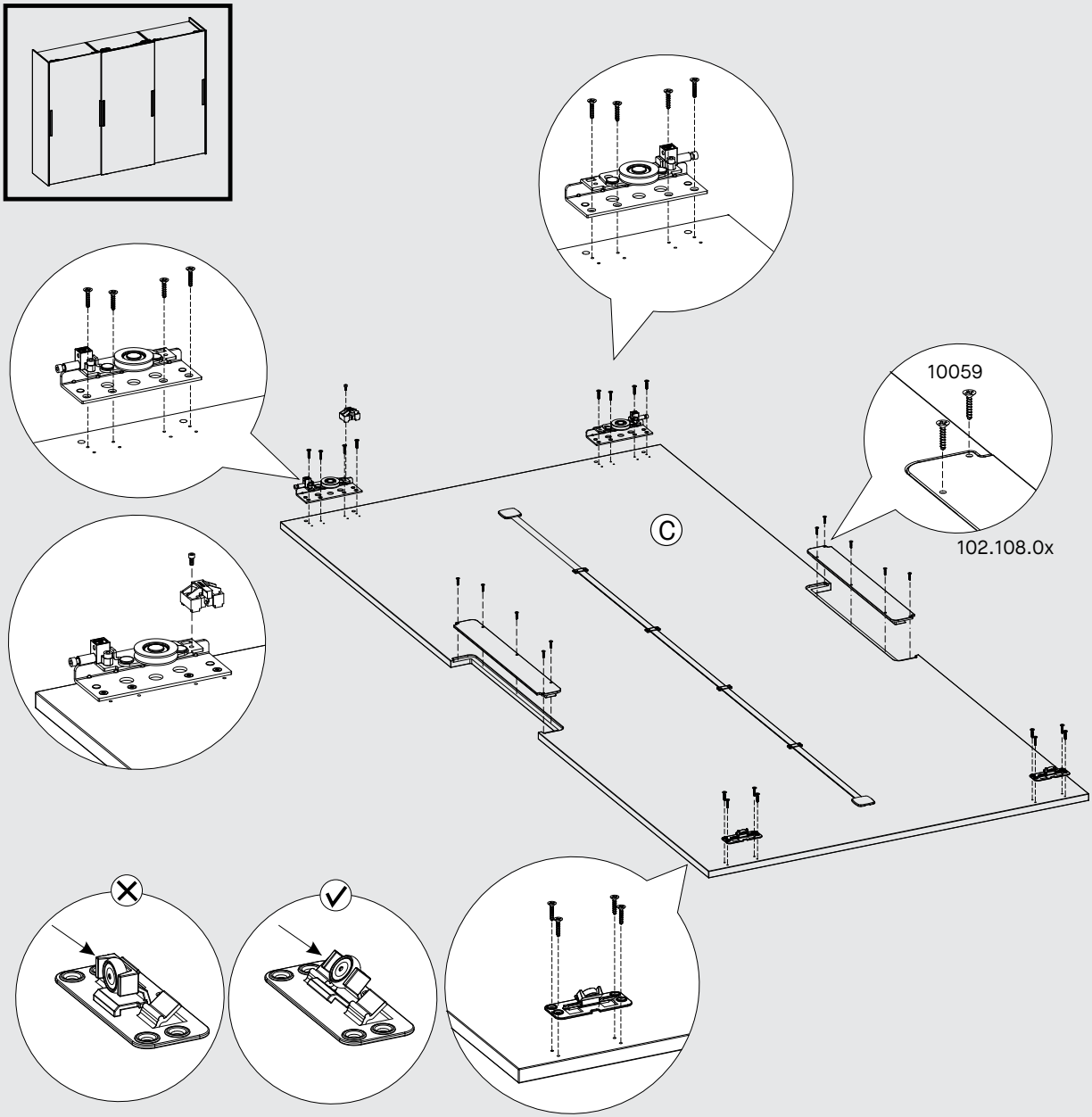
10059
102.108.0x
C

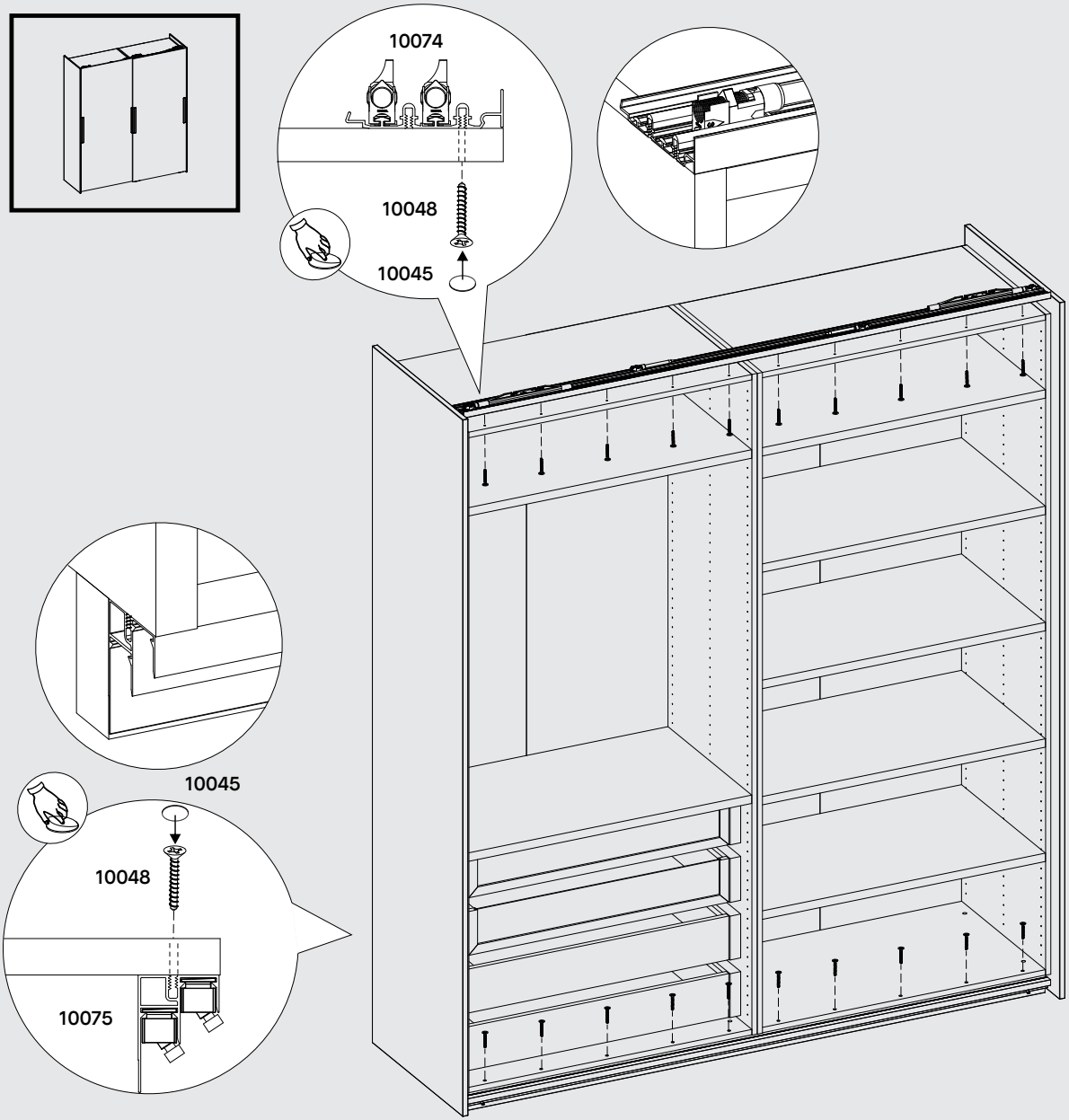
10074
10048
10045
10045
10048
10075

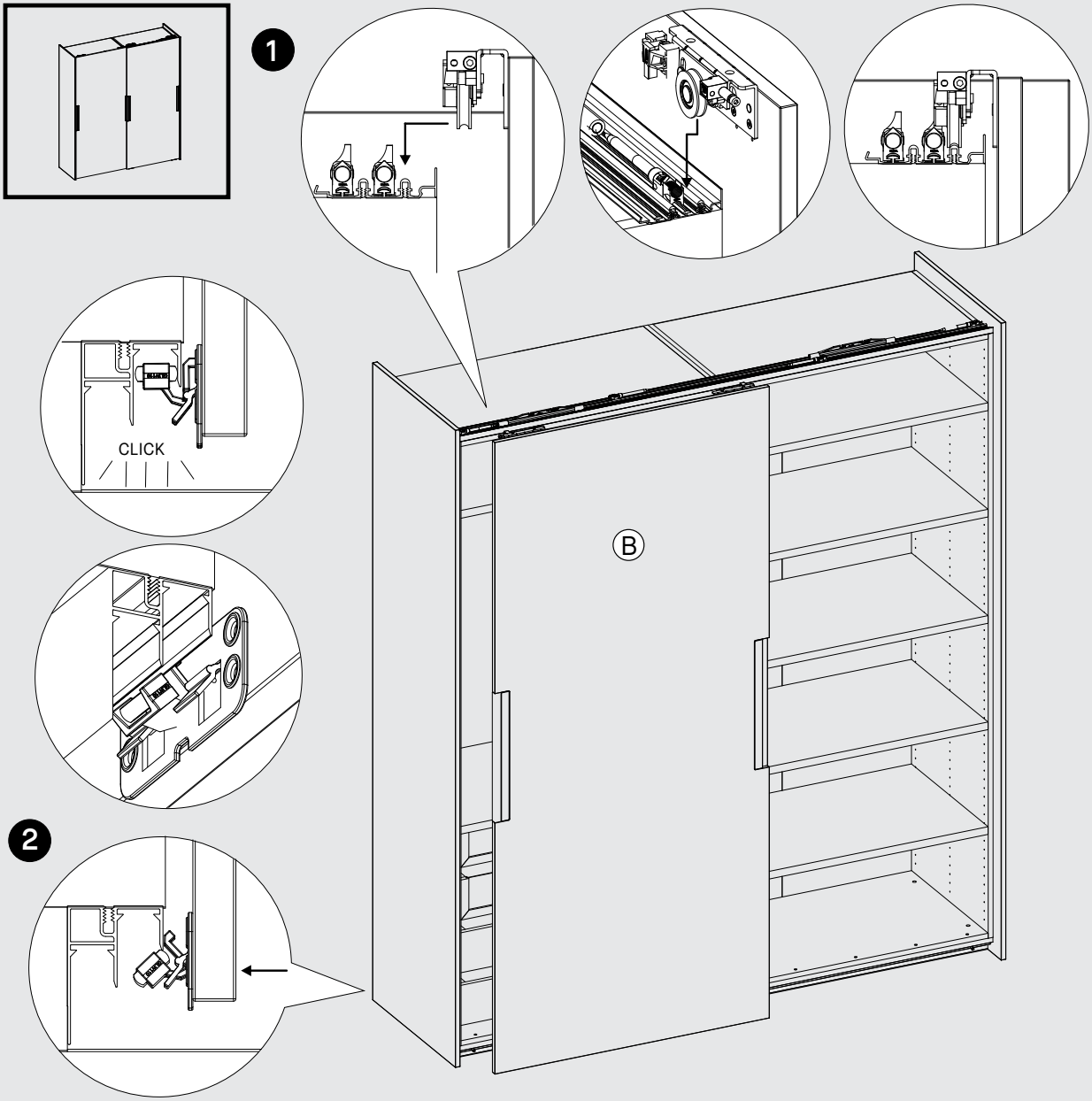
1
CLICK
B
2

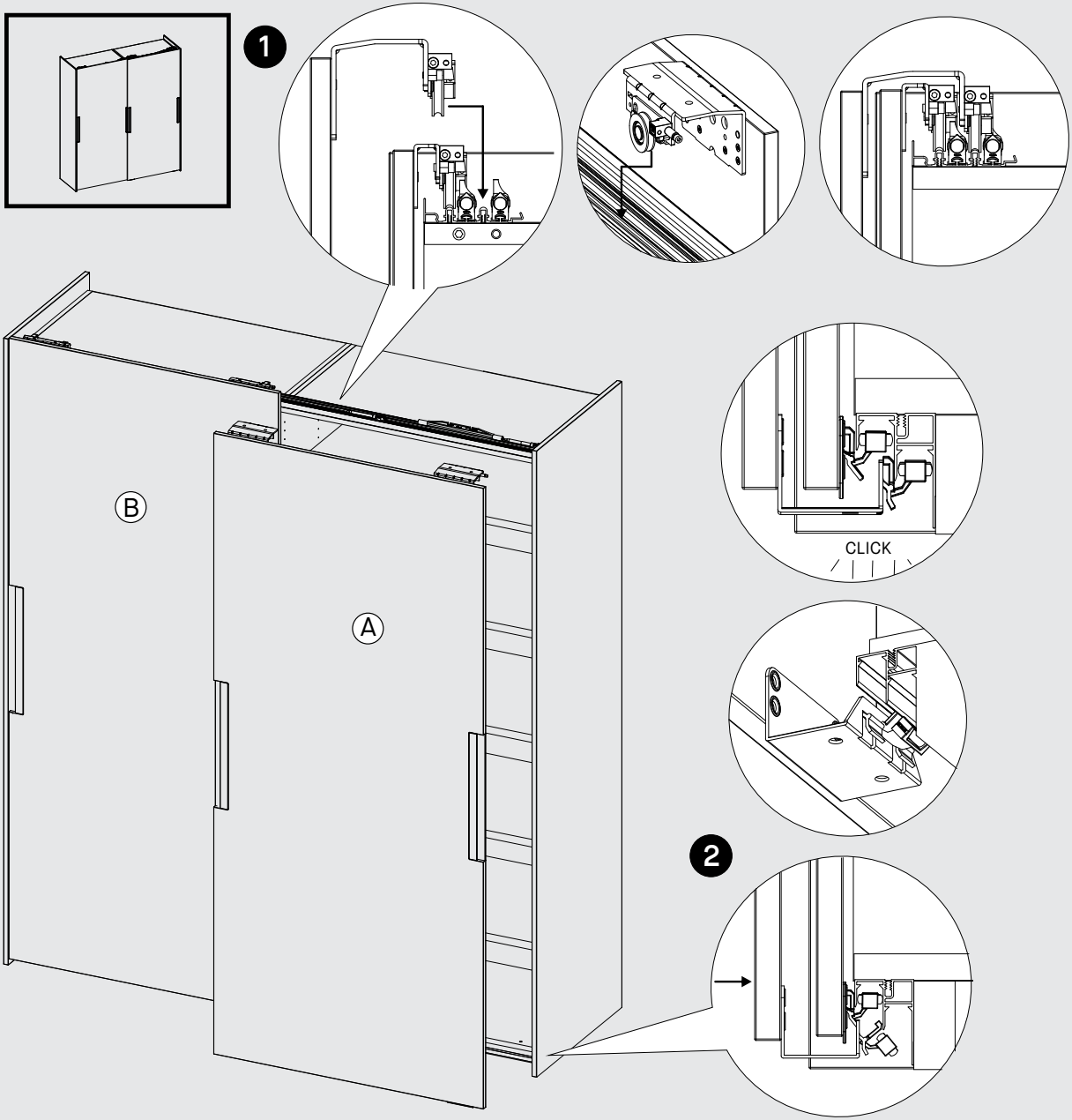
1
B
A
CLICK
2

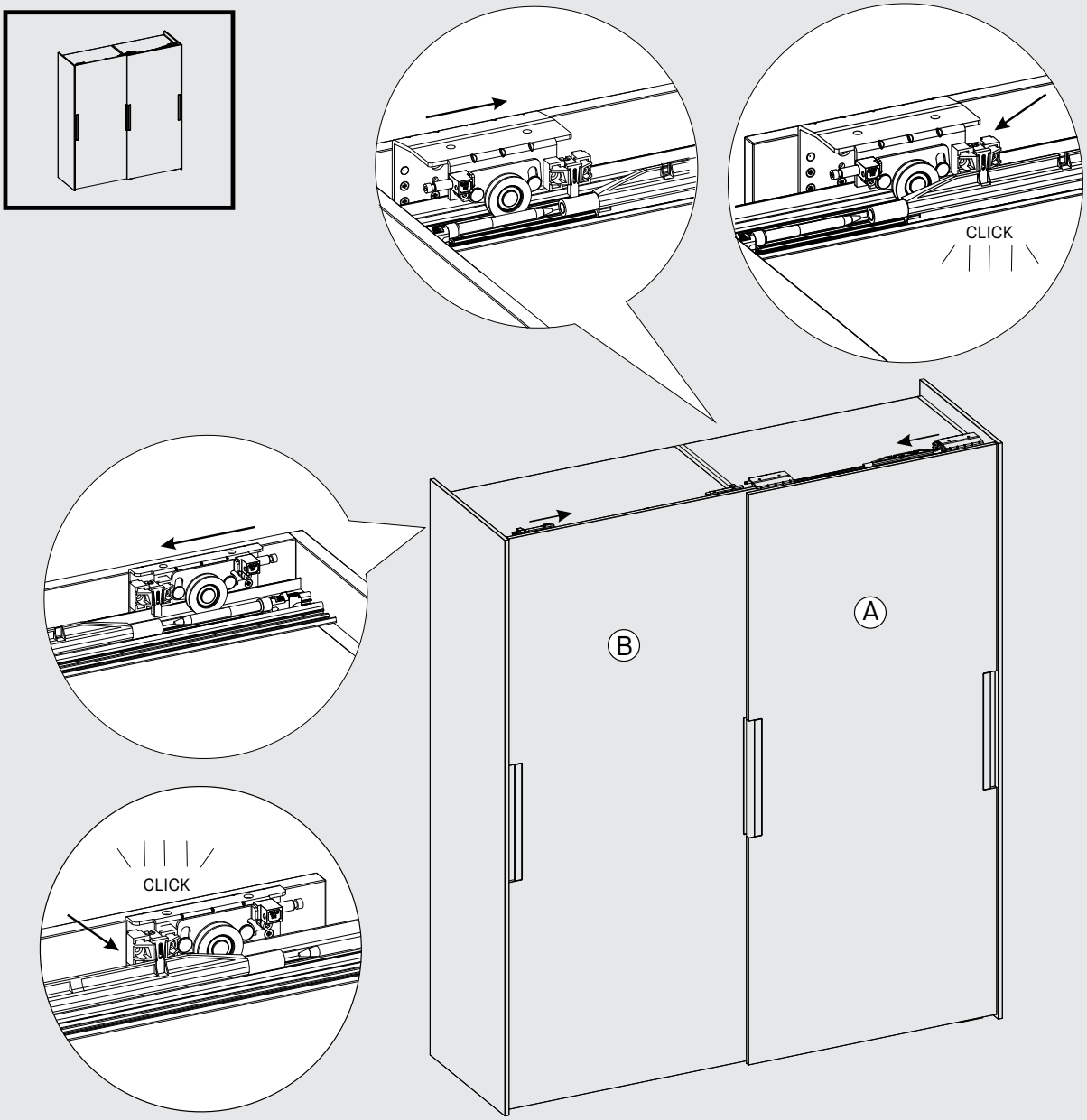
CLICK
CLICK
B
A

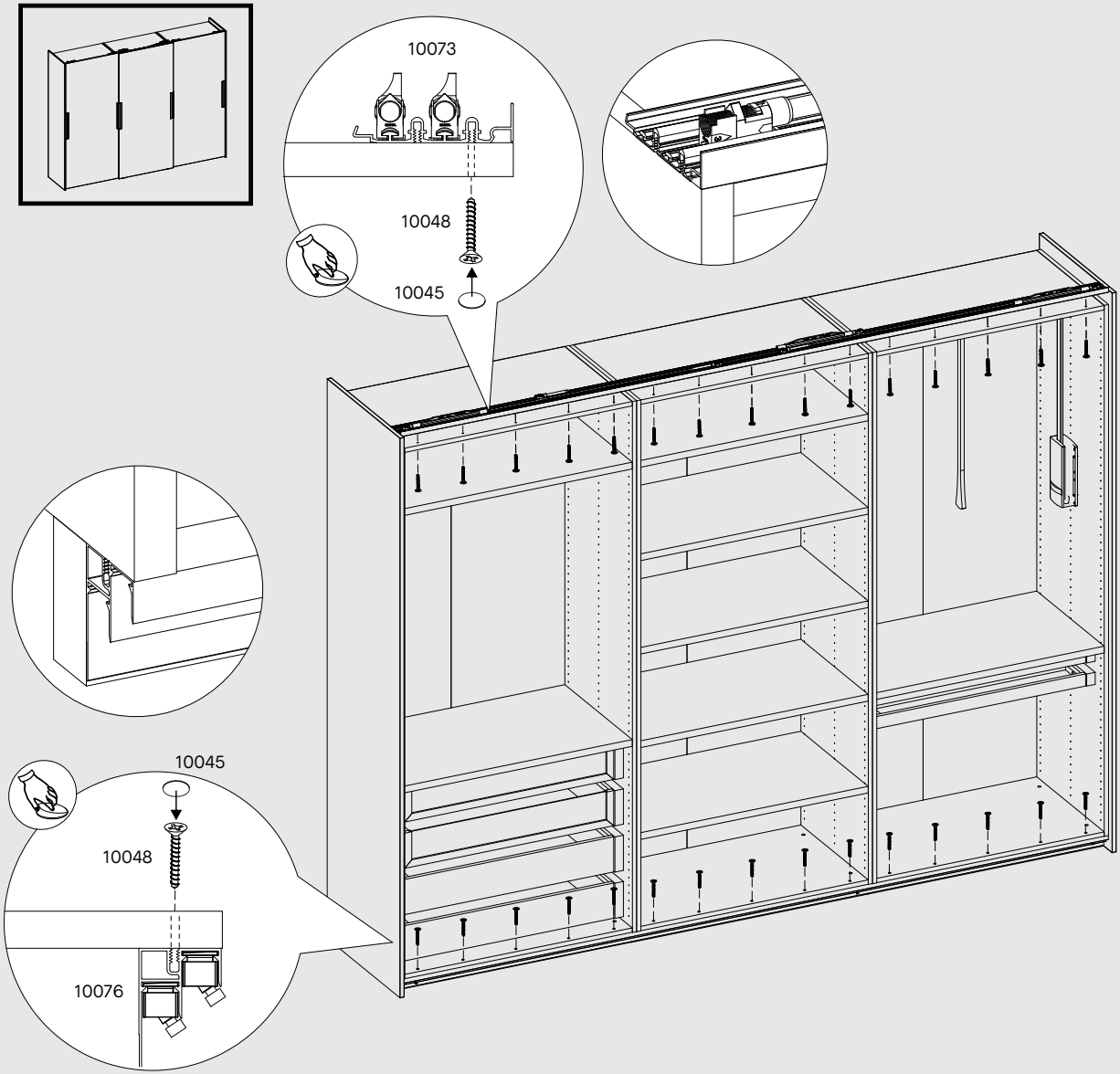
10073
10048
10045
10045
10048
10076

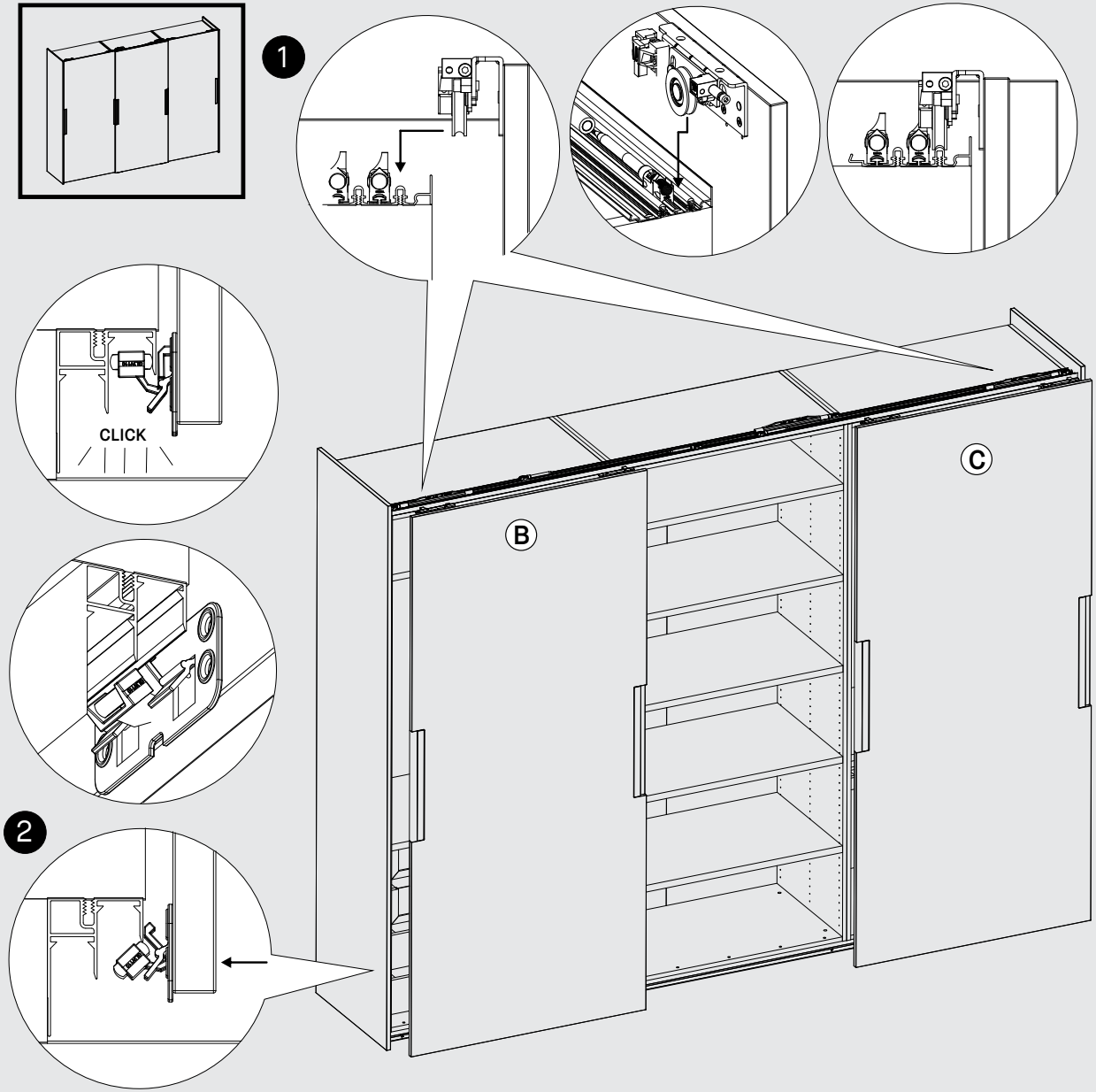
1
CLICK
B
C
2

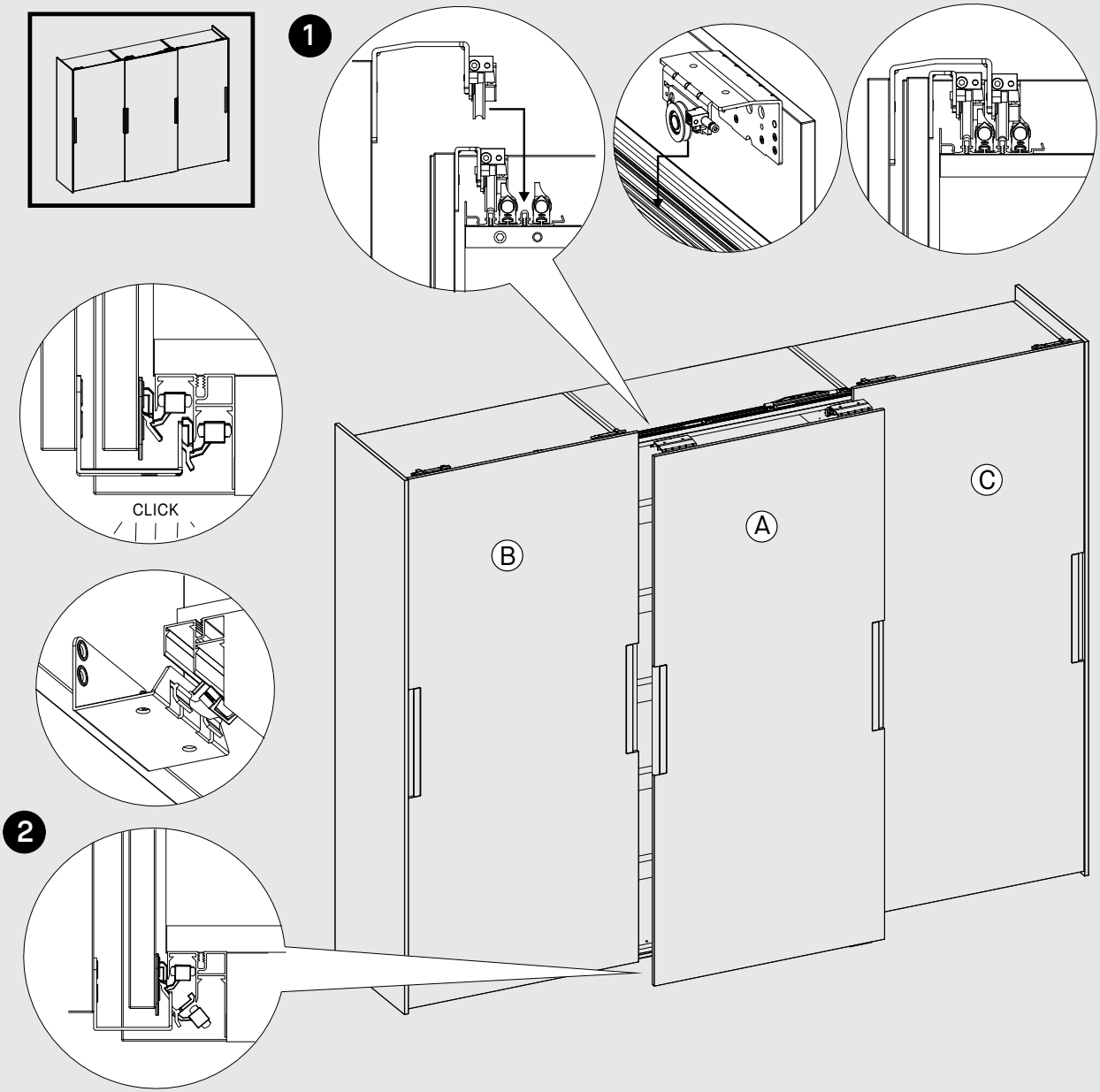
1
2
CLICK
A
B
C

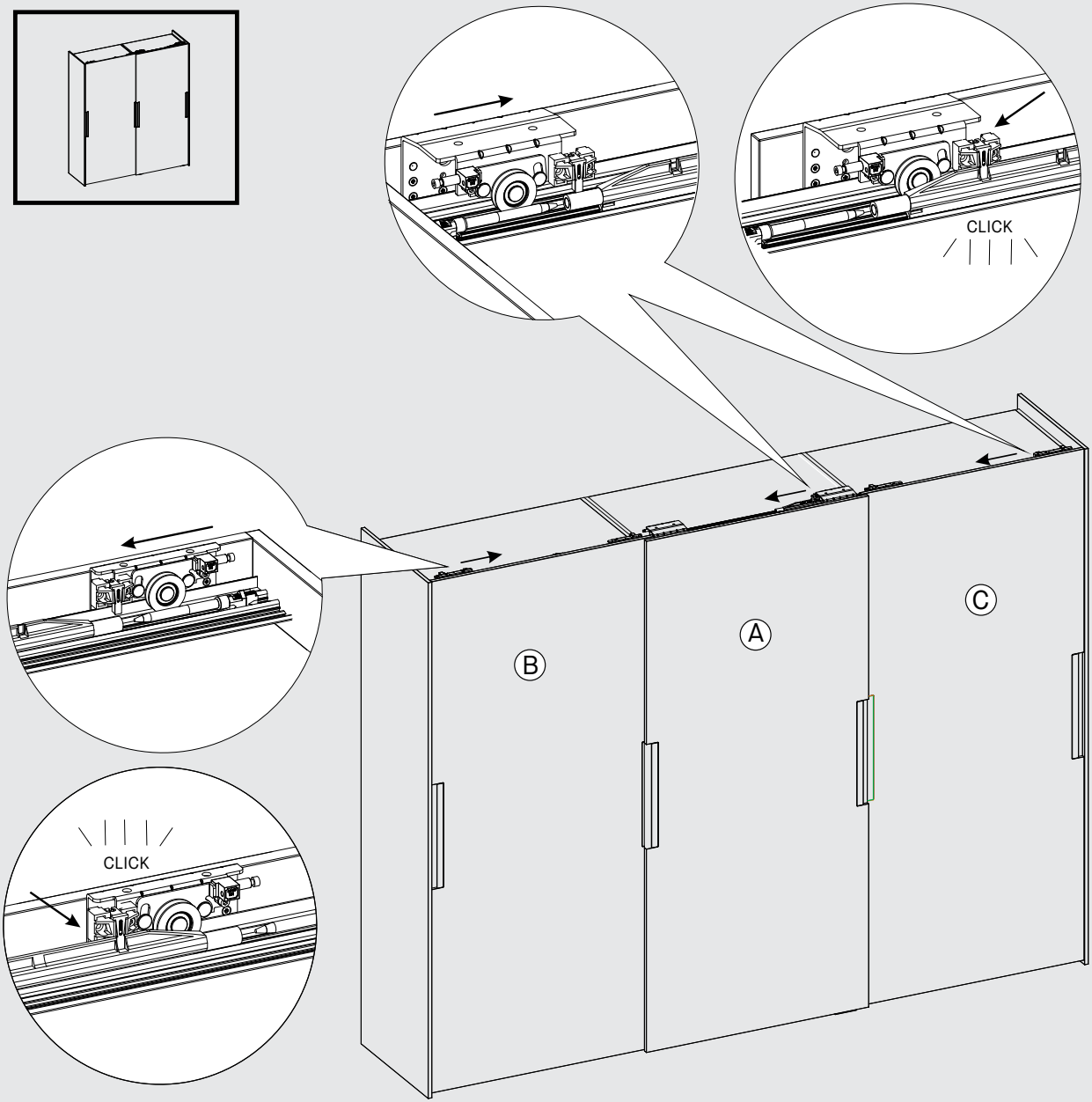
CLICK
CLICK
B
A
C

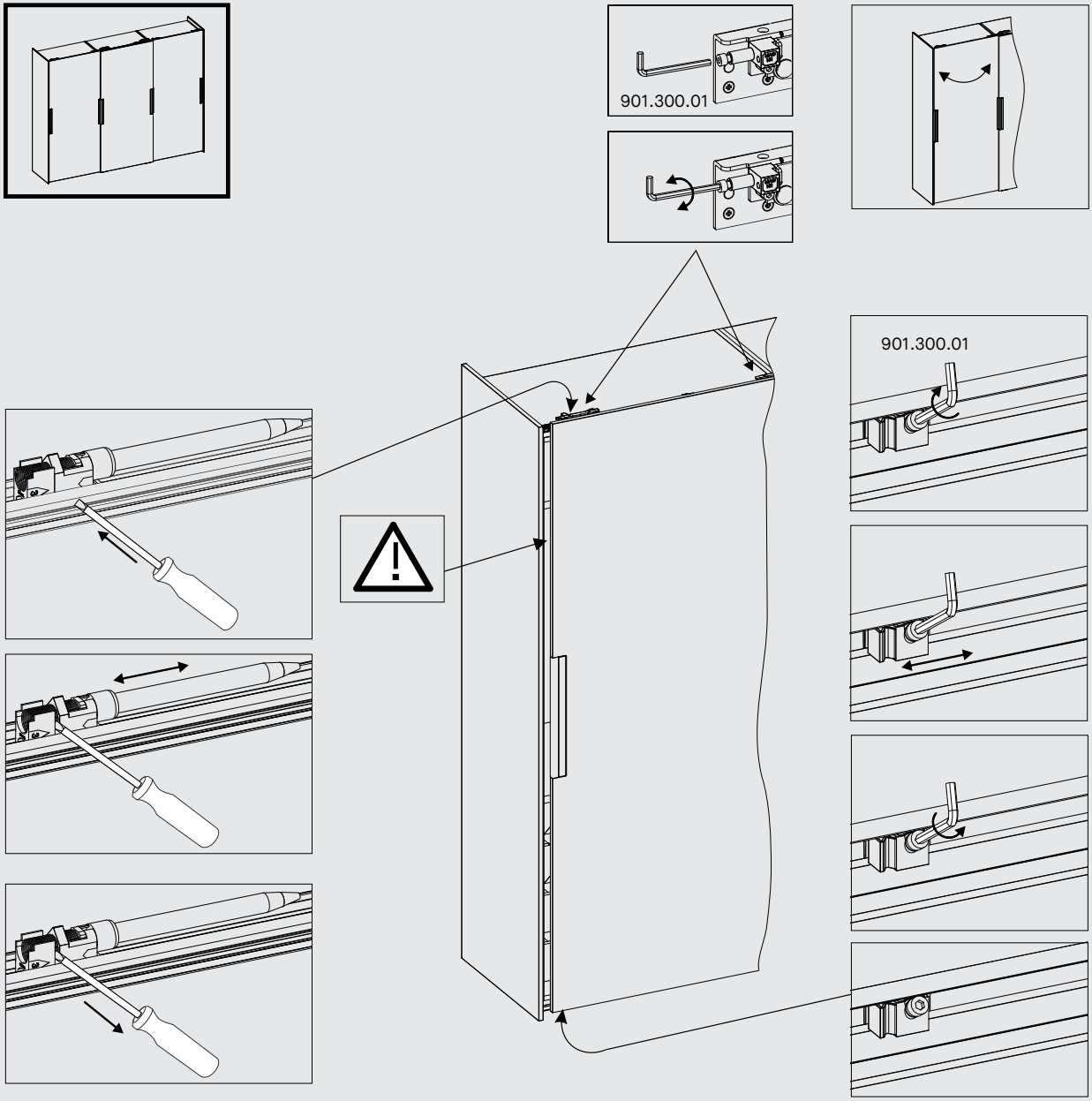
901.300.01
901.300.01

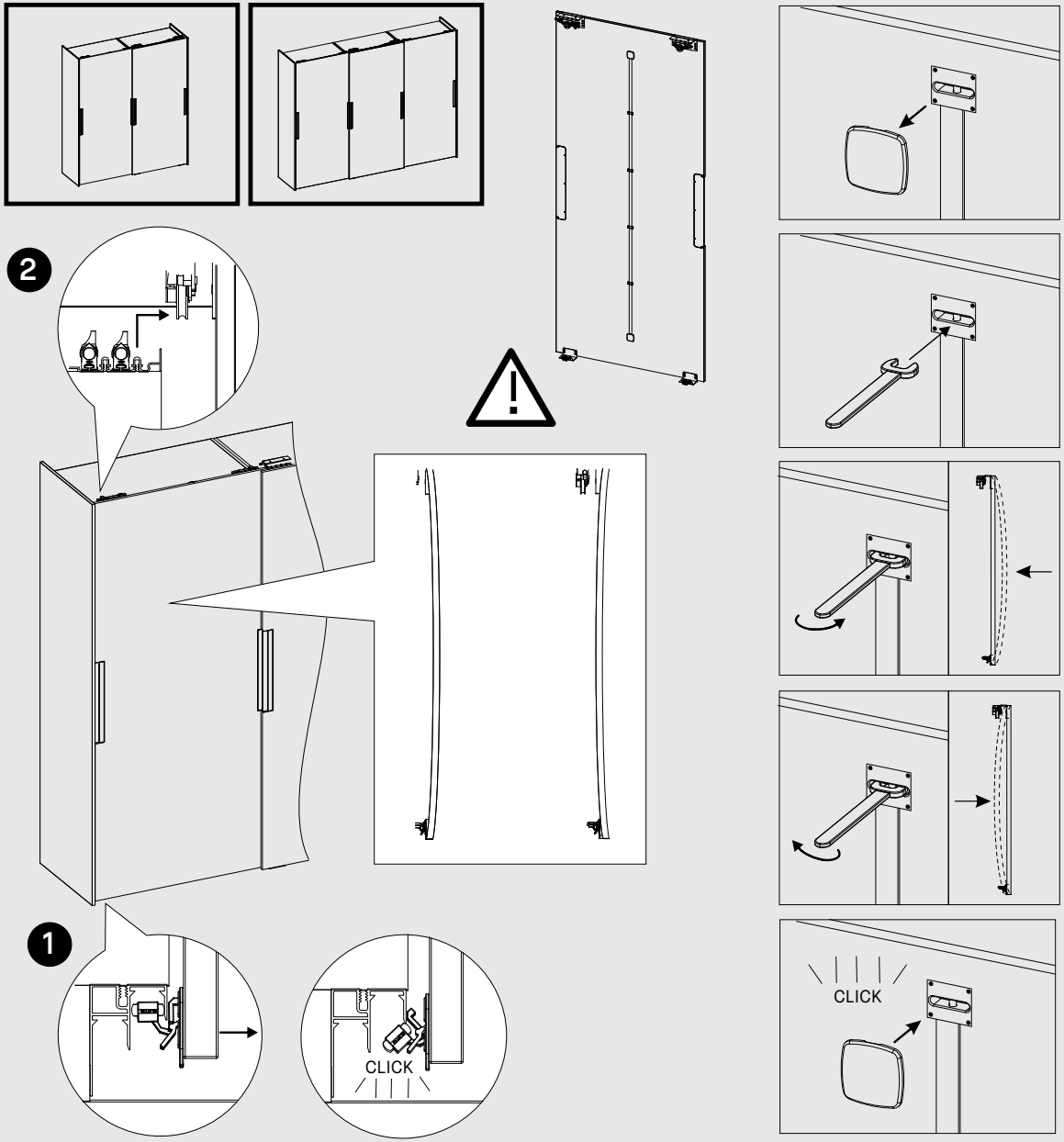
2
1
CLICK
CLICK

mycs GmbH
Am Treptower Park 28-30 (Haus C),
12435 Berlin

E-Mail support@mycs.com

AT +43 800 070 423
CH +41 800 080 060
DE +49 800 100 40 50
FR +33 805 084 320

1

2

3

4

5

6

MYCS

www.mycs.com

2017 // 02