EK70 series

All-in-One Energy Storage System

EK70 HS5-(8K-20K)-T3-X

User Manual

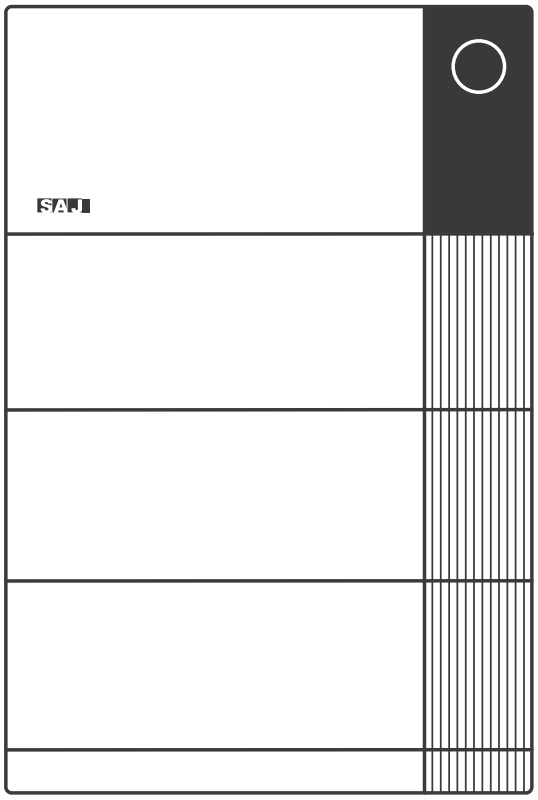

Version 0.1

Copyright Statement

This document, including all text, images, and designs contained herein, is the proprietary information of **Guangzhou Sanjing Electric Co., Ltd.** (“**SAJ**”) and is protected by applicable copyright and trademark laws. No part of this publication may be reproduced, stored, distributed, or transmitted in any form or by any means without the prior written permission of **SAJ**.

The information in this document is provided "as is" for general guidance. While every effort has been made to ensure accuracy and completeness, **SAJ** reserves the right to modify the content herein without prior notice.

Guangzhou Sanjing Electric Co., Ltd. disclaims all implied warranties, including but not limited to warranties of merchantability and fitness for a particular purpose, and shall not be liable for any direct, indirect , incidental, or consequential damages arising out of or in connection with the use of this document or reliance on its content.

SAJ (SAJ) used in this document are the trademarks of Guangzhou Sanjing Electric Co., Ltd. All other brand names, trademarks, or registered trademarks mentioned herein are the property of their respective owners.

For the most current version of this document and product support, please scan the QR code or visit our website as shown below:

Website: https://www.saj-electric.com/

Contact us

Online technical support: Go to https://www.saj-electric.com/services-support-technical to check FAQs or send your message or product enquiry.

Call for assistance: For SAJ support telephone numbers, see https://www.saj-electric.com/locations for your region support details.

- **Headquarter**: Guangzhou Sanjing Electric Co., Ltd.
- **Address**: SAJ Innovation Park, No.9, Lizhishan Road, Guangzhou Science City, Guangdong, P.R.China.
- **Tel**: +86 20 6660 8588
- **E-mail**: service@saj-electric.com
- **Website:** https://www.saj-electric.com/

Warranty

Check the product warranty conditions and terms on the SAJ website: https://www.saj-electric.com/.

About this document

This user manual provides introductions and instructions of operating, maintaining, and troubleshooting the following SAJ product:

- EK70 HS5-(8K-20K)-T3-X

You can find the latest version of this document as eManual at https://www.saj-electric.com/, or scan the QR code below.

Scan for eManuals

Note: Illustrations in this document show only essential details and may differ from the actual product.

Target Audience

This document is applicable to the personnel that transport, install, and operate on the product. The personnel are required to have the following qualifications:

- A certain level of expertise in electronics, electrical wiring, and mechanical knowledge in electrical and mechanical schematics.
- Being familiar with the composition and working principles of the product and its upstream and downstream equipment.
- Professional training related to the installation and commissioning of electrical equipment.
- The ability to respond urgently to dangers or emergencies that may arise during installation or commissioning.
- Being familiar with relevant standards and regulations in the country or region where the project is located.
- Being familiar with the contents in this manual.

Use of the Manual

Read the user manual carefully before any installation, operation and maintenance and follow the instructions during installation and operation. Always keep the printed manual available for future reference.

Levels of Warning Messages

DANGER

Indicates a hazardous situation which, if not avoided, will result in death or serious injury.

WARNING

Indicates a hazardous situation which, if not avoided, will result in serious injury or moderate injury.

CAUTION

Indicates a hazardous situation which, if not avoided, will result in minor or moderate injury.

NOTICE

Indicates a situation which, if not avoided, can result in property damage.

Revision history

Version	Date	Changes
V0.1	2026-09-02	Updated the instructions on connecting the manual transfer switch.
V0.0	2026-07-01	First version.

Contents

1. Safety instructions ... 3
- 1.1. Safety symbols ... 3
- 1.2. Inverter safety instructions ... 4
- 1.3. Battery safety instructions ... 6
- 1.4. Recycling and disposal ... 7

2. Product information ... 8
- 2.1. Product introduction ... 8
  - 2.1.1. EK70 product models ... 8
  - 2.1.2. Dimension ... 9
  - 2.1.3. Inverter ports and switches ... 10
  - 2.1.4. Blind-mate connectors ... 13
  - 2.1.5. LED on the inverter ... 14
- 2.2. Work mode ... 15
- 2.3. System overview ... 17

3. Transportation and storage ... 19
- 3.1. Battery transportation and storage ... 19
- 3.2. Inverter transportation and storage ... 20

4. Installation ... 21
- 4.1. Installation environment requirements ... 21
- 4.2. Plan the installation site ... 22
- 4.3. Installation tools ... 23
- 4.4. Packing list ... 24
- 4.5. Ground mounting ... 28
- 4.6. Wall mounting ... 36

5. Electrical connection ... 39
- 5.1. Europe ... 39
- 5.2. Inverter ports and switches ... 41
- 5.3. Prepare the cables ... 44
- 5.4. Connect the grounding cable ... 47
- 5.5. Connect the AC power cables ... 48
- 5.6. Connect the manual transfer switch (option A) ... 51
- 5.7. Connect the manual transfer switch (option B) ... 54
- 5.8. Connect the DC power cables ... 57
- 5.9. Connect the communication cables to COM port ... 59
- 5.10. Connect the communication module ... 63
- 5.11. Connect the LAN and DRMS cables ... 64
- 5.12. Connect the antenna ... 65

6. Start up the system ... 67

7. Shut down the system ... 70

8. Commissioning on App ... 71
- 8.1. Download and log in to the elekeeper App ... 71
  - 8.1.1. About elekeeper ... 71

8.1.2. Download the elekeeper App....71
8.1.3. Sign up at the elekeeper App....71
8.1.4. Log in to the elekeeper App....74
8.2. Initialization and installation diagnosis....75
8.2.1. Perform one-click initialization....75
8.2.2. Perform installation diagnosis....79
8.2.3. Run self-test for grid connection (For Italy)....81
8.3. Plant management....82
8.3.1. Create a power plant....83
8.3.2. View the power plant details....85
8.4. View product information....87
8.4.1. Check alarm messages....87
8.4.2. Check battery status....89
8.4.3. View the inverter firmware version....91
8.4.4. View the V-Watt and V-Var settings....93
8.5. System function configurations....96
8.5.1. Configure working strategy....96
8.5.2. Set the battery parameters....100
8.5.3. Configure main circuit breaker power monitoring....102
8.5.4. Configure power adjustment function....103
8.5.5. Configure the DRM settings....106
8.5.6. Configure G100 function....108

9. System maintenance....110
9.1. Routine maintenance....110
9.2. Troubleshooting....112

10. Product specification....115
10.1. EK70 HS5-(8K-20K)-T3-X....115
10.2. EK70 battery and battery system designations....118
10.3. Battery....118
Back Cover....120

1. Safety instructions

1.1. Safety symbols

Symbol	Description
	Danger: Electrical shock hazard This device is directly connected to public grid and thus all work to the system shall only be carried out by qualified personnel.
	Danger: Hot surface The components inside the battery will release a lot of heat during operation. Do not touch metal plate housing during operating.
	Danger: Risk of electric shock from energy stored in capacitor. Do not open the cabinet door until 5 minutes after disconnecting all sources of supply.
	Warning: No open flames Do not place or install near flammable or explosive materials.
	Caution Keep the product out of reach of children.
	Caution: Check the user manual before service If an error has occurred, refer to the troubleshooting instructions to remedy the error.
	Caution This device shall NOT be disposed of in residential waste.
	Caution This battery module shall NOT be disposed of in residential waste.
	CE Mark Equipment with the CE mark fulfills the requirements of the Low Voltage Directive and Electro Magnetic Compatibility.
	RoHS compliant mark Equipment with the RoHS mark does not exceed the allowable amounts of the restricted substances defined in Restriction of Hazardous Substances in Electrical and Electronic Equipment.
	RCM compliant mark Equipment with the RCM mark is in compliance with AS/NZS 4417.1 & 2 and the EESS.
	Recyclable

1.2. Inverter safety instructions

Personal Safety

DANGER

Risk of personnel hazard or equipment damage due to improper operations

Improper operations performed on energized equipment by unqualified personnel may lead to equipment failure or safety hazards.

- Only qualified and trained professionals who are familiar with electrical installation and local codes may install, maintain, or repair the equipment.
- Before any operation, read the safety precautions thoroughly and always follow the standard procedures during operation. Non-standard and improper operations on the energized equipment may cause fire, electric shocks, or explosion.
- Do not reconstruct or alter the equipment, add components, or change the installation sequence without permission. Any unauthorized operation including modification of product functionality of any form may cause lethal hazard to the operator, third parties, the units or their property.
- Before any operation, remove conductive objects such as watches, bracelets, bangles, rings, and necklaces to prevent electric shocks.
- During operation, do not open the housing or touch electrical terminals.

WARNING

Risk of personal injury due to direct contact with the components or housing

Direct contact with hazardous moving or hot components during the inverter's operation may lead to personal injury.

- Do not touch a running fan with your hands, components, screws, or any other tools.
- During operation, do not touch heat sink area with bare hands as the inverter surface may become hot.

CAUTION

Risk of equipment damage and personal injury

If you detect any unusual odors, hear abnormal noises, or notice smoke during operation, immediately shut down the unit and disconnect all power sources.

NOTICE

Risk of equipment malfunction and safety hazards

Failure to follow proper guidance and neglect of regular monitoring prevents the timely identification and prevention of potential issues.

- Read the entire user manual before installation and keep it at hand for future reference.
- Regularly check the status via the monitoring interface to promptly detect any abnormalities.

Electrical Safety

DANGER

Risk of high voltage and electric shock

Before any operation, disconnect the inverter from all AC and DC power sources and wait at least 5 minutes to allow internal capacitors to discharge.

WARNING

Risk of overheat, fire and equipment damage

Obstructing ventilation or allowing foreign objects to enter the equipment may lead to fire hazards.

- During operation, ensure that the ventilation vents or heat dissipation systems are not obstructed or covered by other objects to prevent fire due to high temperature.
- During operation, prevent foreign matter from entering the equipment. Otherwise, equipment short-circuits or damage, load power derating, power failure, or personal injury may occur.
- Do not place any foreign objects or liquid containers on the inverter.

Environment Requirements

DANGER

Risk of severe electrical shock

- A lightning strike can induce a sudden and massive power surge, which poses severe hazard to both personnel and equipment.
- Installation, operation, and maintenance is prohibited during thunderstorms.

Mechanical Safety

NOTICE

Risk of equipment failure or physical injury

Installing or operating an inverter with pre-existing physical damage compromises safety and functionality.

- Before unpacking the inverter, check the outer packing materials for damage, such as holes and cracks, and check the inverter model. If any damage is found or the inverter model is not what you requested, do not unpack the package and contact your supplier as soon as possible.
- Before installation, inspect the equipment for any visible damage or signs of transportation damage. If damage is found, do not install or use the equipment.

1.3. Battery safety instructions

DANGER

Risk of electric shock, short circuit, or equipment damage

Performing operations on live / defective equipment or improper grounding connection cause electric shock.

- Do not use the battery or the battery control unit if it is defective, broken or damaged.
- Do not subject the battery to any strong force.
- Keep the power off prior to any operations.
- Make sure that the battery is grounded prior to use.
- Do not pull out any cables or open the battery enclosure when the battery is powered on.
- Maintenance and installation at the battery cell assembly level are not required, and on-site repair or replacement of cell-level components is strictly prohibited. Any such operations shall be carried out by returning the battery module to SAJ or the service provider.

DANGER

Risk of reduced life cycle, fire, or explosion

Excessive heat or direct exposure to heat sources destabilizes the battery chemistry.

- Do not expose the battery to temperatures more than 50°C.
- Do not place the battery near a heat source, such as direct sunlight, a fireplace.
- Keep inflammable and explosive dangerous items or flames away from the battery.

DANGER

Risk of short circuit, corrosion, internal damage, or malfunction

Water, moisture, or specific corrosive gases can damage electronics and battery components.

- Do not soak the battery in water or expose it to moisture or liquids.
- Do not use the battery in areas where the ammonia content of the air exceeds 20 ppm.

WARNING

Severe injury, death, equipment damage, system failure, and voided warranty

Improper handling by unqualified individuals can lead to electrical hazards.

- Only qualified personnel with a thorough understanding of local safety regulations and battery standards may install, maintain, remove, or dispose of this product.
- **SAJ** shall not be held liable for any loss or warranty claims resulting from unauthorized product modifications that could lead to fatal injury, harm to third parties, or impaired equipment performance.
- The battery cannot be disposed of as household refuse. When the service life of the battery reaches its limit, it is not required to return it to the dealer or **SAJ**, but it must be recycled to the special waste lithium battery recycling station in the area.

WARNING

Risk of fire, explosion, severe burns, equipment destruction

Short circuit allows high current to flow and generate intense heat.

- To ensure personal and property safety, never short-circuit the positive (+) and negative (-) terminals.
- Connect the batteries in parallel. Do not connect them in series.
- The battery can start only when connected to the inverter. Once disconnected from the inverter, there is no voltage output at the positive and negative terminals. Do not forcibly activate the battery to output voltage by other means.

CAUTION

System malfunction, accelerated battery degradation, risk of overheating, and potential safety hazards

Incompatible components or mixed battery types can lead to improper charging/discharging, voltage imbalance, and communication failures.

- Use this battery only with inverters specified as compatible by the manufacturer.
- Do not mix batteries of different models or specifications in a single energy storage system.

NOTICE

For optimal performance and safety, use batteries from the same production batch to minimize the risk of operational abnormalities.

1.4. Recycling and disposal

NOTICE

This product should not be disposed as a residential waste.

Some components inside the equipment can be recycled and reused, while others may pose a pollution risk to the environment. Please contact a locally authorized professional recycling agency for the proper handling of the product and its internal components.

2. Product information

2.1. Product introduction

2.1.1. EK70 product models

Model description

Take EK70-HS5-12K-T3-X-IE as an example.

EK70 HS5-12K-T3-X-IE

① ② ③ ④ ⑤

①	The product series.
②	It means the rated power of the system is 12 kW.
③	It means three phase with 3 MPPT.
④	It means the rated capacity in kWh of battery packs.
⑤	It can be blank or IE. IE means the Ireland model.

Product models

System	EK70 HS5-8K-T3-X[1]
	EK70 HS5-10K-T3-X
	EK70 HS5-12K-T3-X
	EK70 HS5-12K-T3-X-IE
	EK70 HS5-15K-T3-X
	EK70 HS5-20K-T3-X
Inverter	EK70 HS5-8K-T3
	EK70 HS5-10K-T3
	EK70 HS5-12K-T3
	EK70 HS5-12K-T3-IE
	EK70 HS5-15K-T3
	EK70 HS5-20K-T3
Battery	EK70 BU5-6.0-TV
	EK70 BU5-7.0-TV
	EK70 BU5-9.0-TV
Battery base	BE5-TV
Wall-mounting bracket	BT5-TV

1. The value of x includes 6, 7, 9, 12, 14, 15, 16, 18, 21, 24, 25, 27, 28, 30, 35, 36, 40, 42, 45, 50, and 54.

2.1.2. Dimension

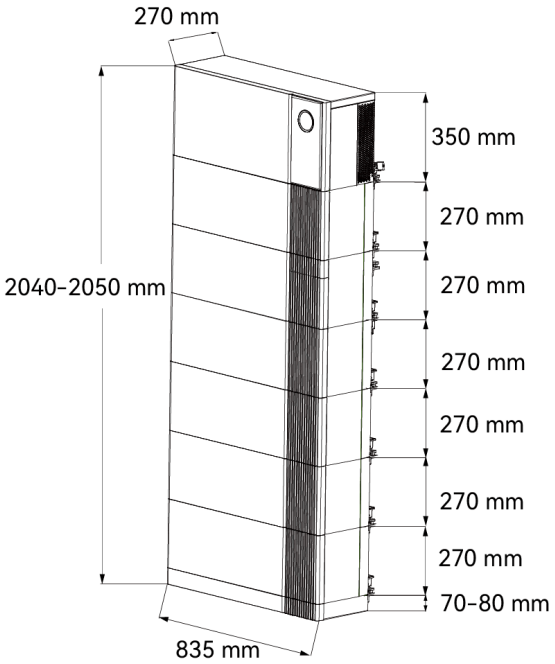

Figure 2.1. Dimensions

2.1.3. Inverter ports and switches

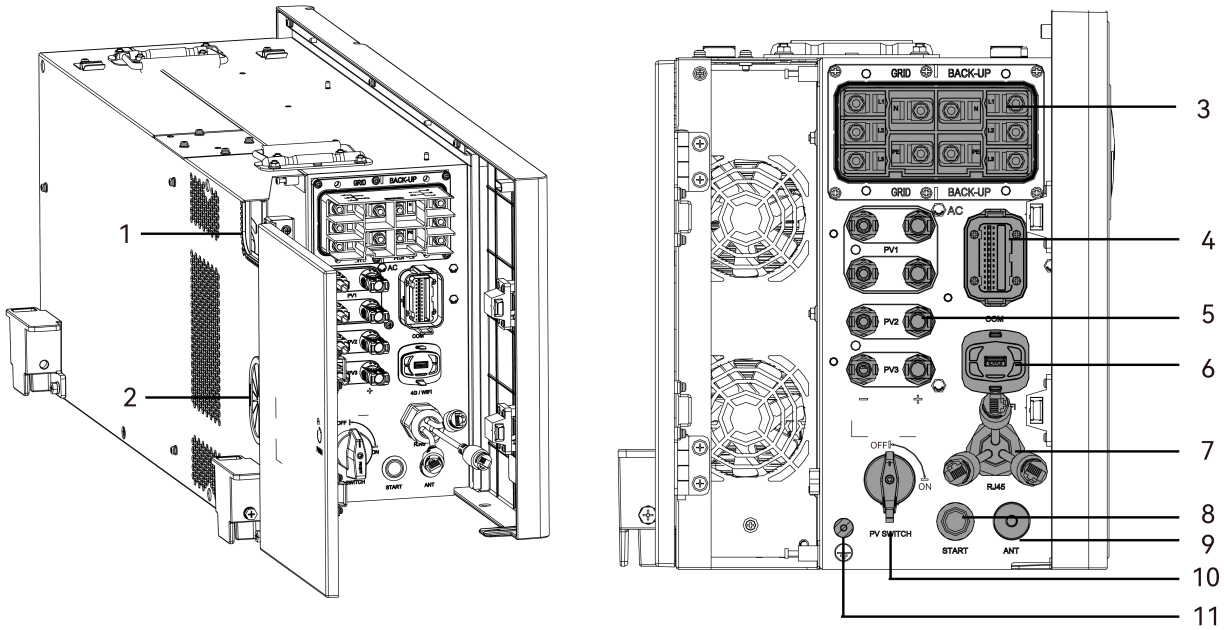

Callout	Silkscreen	Description
1	/	The cable entry hole 1 for routing AC power cables.
2	/	The cable entry hole 2 for routing the following cables: • The grounding cable • The DC power cables • The communication cables
3	**AC** • **GRID** • **BACK-UP**	The connection ports for AC power cables. • **GRID**: for connecting to the public grid. • **BACK-UP**: for connecting to the home backup load.
4	**COM**	The connection port for communication cables from external devices like DI/DO devices.
5	**PV1, PV2, PV3**	The negative and positive PV input connection ports.
6	**4G/WIFI**	The connection port of the eSolar AIO3 Pro and 4G Pro communication modules.
7	**RJ45**	The RJ45 connection ports for **LAN1**, **LAN2**, and **DRMs** connections as labelled on the ports. **LAN1** and **LAN2** ports are reserved for future use.
8	**START**	For starting up the energy storage system.
9	**ANT**	The LoRa antenna connection port.
10	**PV SWITCH**	The PV switch that controls the connection to the PV array.

Callout	Silkscreen	Description
11	⏚	The grounding cable connection port.

Table 2.1. Inverter electrical ports

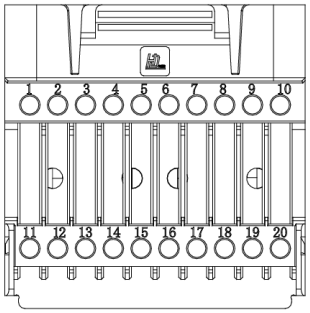

Number	Silkscreen	Description
1-6	/	Reserved for future use.
7	**DO1+**	Output connection for dry contact device 1.
8	**DO1-**	Output connection for dry contact device 1.
9	**DO2+**	Output connection for dry contact device 2.
10	**DO2-**	Output connection for dry contact device 2.
11	**PC 485A**	Reserved RS485 connection ports. The RS485 communication can be adjusted with the provided 120 Ω resistor controlled by **SW2** DIP switch.
12	**PC 485B**	
13	**Meter 485A**	For RS485 connections with the meter. The RS485 communication can be adjusted with the provided 120 Ω resistor controlled by **SW3** DIP switch.
14	**Meter 485B**	
15	**DI1+**	Input connection for dry contact device 1.
16	**DI1-**	Input connection for dry contact device 1.
17	**DI2+**	Input connection for dry contact device 2.
18	**DI2-**	Input connection for dry contact device 2.
19	**12V**	Port for providing 12V DC power supply to the external device.
20	**GND**	Port for grounding connection.

Table 2.2. 20-pin definition for COM port

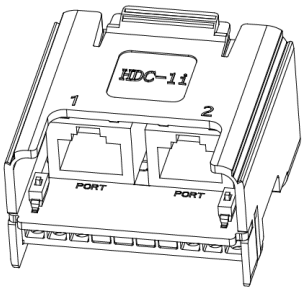

Figure 2.2. RJ45 ports for communication connector

Number	Silkscreen	Description
1	**PORT CAN**	Reserved port.

Number	Silkscreen	Description
2	**DSP CAN**	Reserved port.

2.1.4. Blind-mate connectors

The EK70 system is equipped with blind-mate connectors on the inverter, batteries, and battery base, ensuring quick electrical connection and communication among these components. The following figure shows the positions and ports of the connectors.

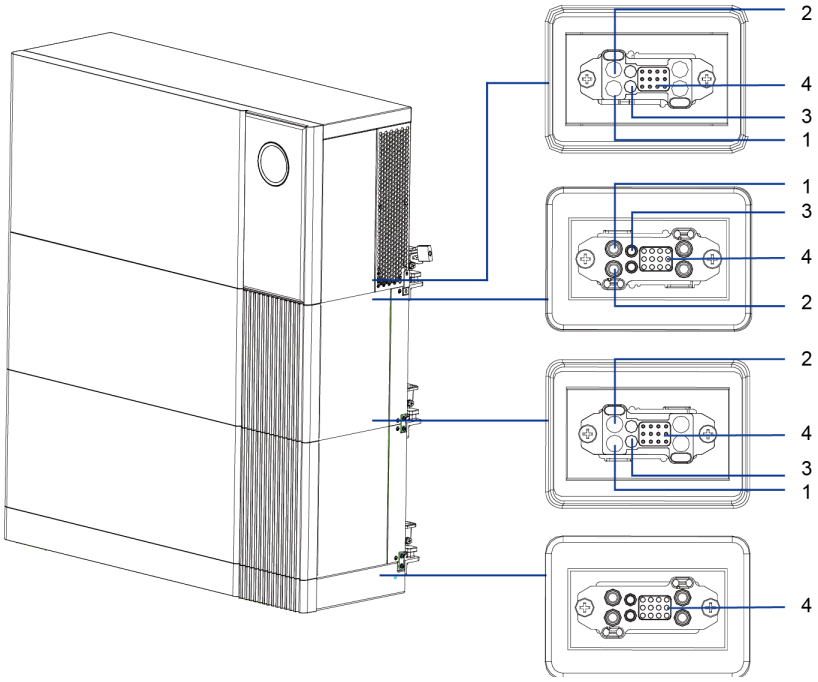

Number	Designation
1	The positive pole port of the blind-mate connector.
2	The negative pole port of the blind-mate connector.
3	The protective earth (PE) port of the blind-mate connector.
4	The communication ports of the blind-mate connector.
Non-labeled ports	Reserved for future use.

2.1.5. LED on the inverter

Figure 2.3. Inverter LED panel

Display	Color	Status	Description
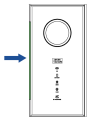	Green	Solid on	The inverter is working properly with grid connection.
		Breath, on 1.5s, off 1.5s	The inverter is in initialization or standby state.
		Breath, on 3s, off 3s	The inverter is working properly off-grid.
		Breath, on 0.5s, off 0.5s	The inverter is working off-grid with SOC lower than 20%.
	Red	Solid on	The inverter is faulty.
	Yellow	Breath, on 3.5s, off 3.5s	The inverter is upgrading.
	Gray	Off	The inverter is powered off.

Table 2.3. LED light

Display	Color	Status	Description
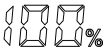	White	*Integer* (example, 50)	Battery state of charge (SOC). For example, 50%.
		--	The battery communication is lost.
PV	White	Solid on	The PV array is working.
		Off	The PV array is not connected.
	Red	Solid on	The PV array is faulty.
BATTERY	White	Solid on	The battery is charging.
		Breath, on 1s, off 1s	The battery is discharging.
		Off	The battery is disconnected or inactive.
	Red	Solid on	The battery is faulty.
GRID	White	Solid on	The inverter is working with grid connection.
		Breath, on 3s, off 3s	The inverter is working off-grid.
		Off	No grid is detected.
	Red	Solid on	AC connection point is faulty.
COM	White	Solid on	In good communication with the meter, BMS, and cloud.
		Breath, on 1s, off 1s	Lost communication with the meter, BMS, or cloud.
	Red	Solid on	Lost communication with all the meter, the BMS, and cloud.

Table 2.4. LED indicators

2.2. Work mode

The EK70 system supports the following working modes:

AI Mode

The working mode with AI Saving enabled. The system leverages AI-powered intelligent scheduling based on forecasts of PV generation, load demand, and electricity pricing to optimally allocate energy sources and usage, minimizing electricity bills and maximizing grid-export revenue.

Self-consumption Mode

The self-consumption mode maximizes the use of electricity generated by PV and minimizes the electricity purchased from the grid to reduce costs.

Period	Working logic
PV power is sufficient	**[PV→ Loads > Battery > Grid]** Any PV power will first supply the loads,with any surplus being used to charge the battery. Any excess power can then be exported to the grid.
PV power is insufficient	**[Battery + Grid → Loads]** Both the battery and the grid power the loads. The battery discharges power to the loads first. Once the battery reaches its minimum SOC, it stops discharging, and the grid supplies power to the loads.

Time-of-use Mode

The time-of-use mode allows the users to set the battery charging and discharging time according to the local peak and valley electricity prices.

Period	Working logic
Charging period (with lower electricity price)	**[Grid→ Battery]** The battery charges from the grid at a preset charging power until reaching the preset stop-charging SOC (%).
Discharging period (with higher electricity price)	**[Battery→ Loads]** The battery discharges to loads at a preset discharging power until reaching the preset stop-discharging SOC (%).
Other period	The working logic is the same as self-consumption mode.

Back-up Mode

The back-up mode is suitable for areas with frequent power outages. In this mode, the battery capacity is maintained at a relatively high level to ensure that loads work normally when the grid is off. The battery will not be discharged until a grid outage occurs.

Period	Working logic
Grid outage occurs	**[PV → Loads > Battery]** The PV power will first supply the loads, with any surplus being used to charge the battery.

Period	Working logic
No grid outage	**[PV → Loads > Battery > Grid]** The PV power will supply the loads first and any surplus will be used to charge the battery. Excess power can then be exported to the grid.

Table 2.5. With sufficient PV power

Period		Working logic
Battery SOC > preset capacity	Grid outage occurs	**[Battery → Loads]** The battery discharges power to the loads until the battery reaches its minimum SOC.
	No grid outage	**[Grid → Loads]** The grid powers the loads.
Battery SOC ≤ preset capacity	Grid outage occurs	**[Insufficient PV → Loads]** Only the insufficient PV supplies power to the loads. The battery will not be discharged until its SOC becomes higher than the preset capacity.
	No grid outage	**[Grid → Loads]** Only the grid powers the loads.

Table 2.6. With insufficient PV power

2.3. System overview

This section shows the typical integration solutions of system.

Whole home backup solution

In the whole home backup solution, the system supports integrating with a manual transfer switch that allows the whole home load to connect to and switch between the inverter AC backup output and the public grid. If the grid goes off, the whole home load can be manually switched to the system immediately, and vise versa.

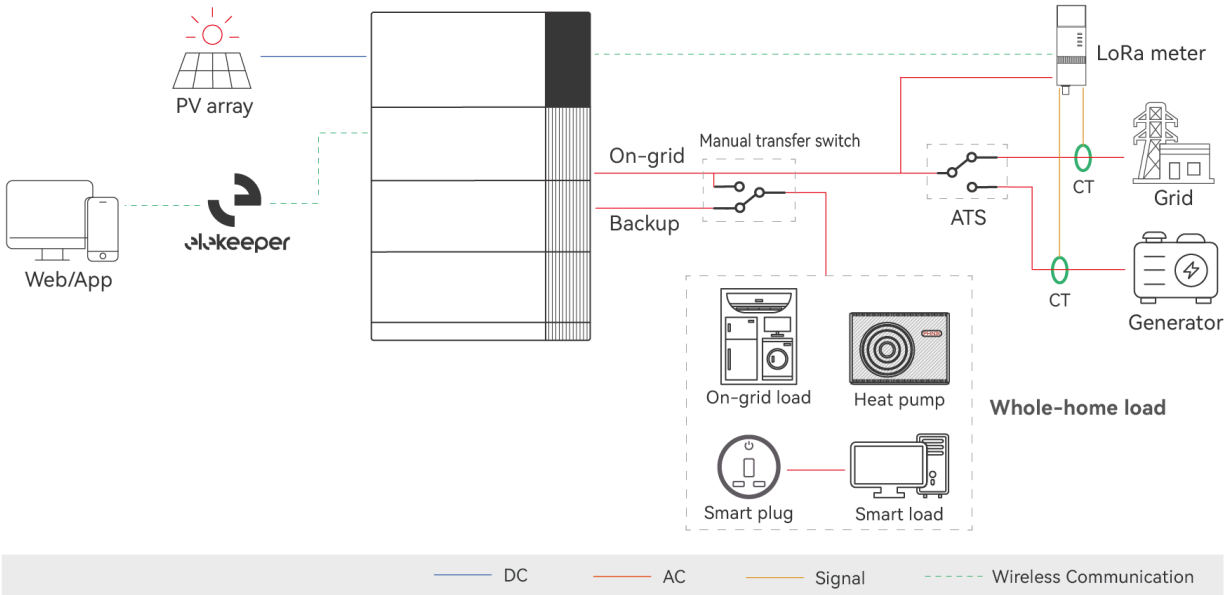

Figure 2.4. Whole home backup solution

Brand	Specification
Lazzen	• Single-phase: NDQ2S-63/1P • Three-phase: NDQ2S-63/3P

Table 2.7. Manual transfer switch specification

Partial backup solution

In the partial backup solution, the on-grid load can be connected to the grid AC output of the system, and the off-grid load can be connected to the AC backup output of the system.

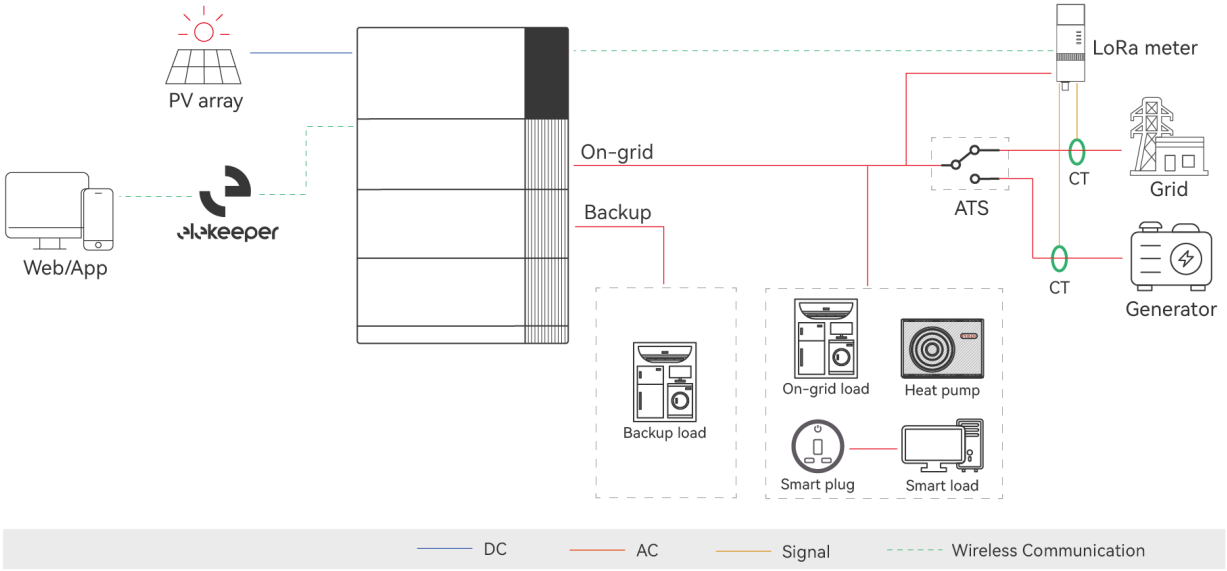

Figure 2.5. Partial Backup Solution

In both solutions, the system provides a dual-channel wireless meter. The meter supports wireless communication with the system at an optimal distance of 150 meters when penetrating walls.

The system also support integrating with wired meter connections through RS485 communication.

3. Transportation and storage

3.1. Battery transportation and storage

Transportation

WARNING

- The product has passed the UN38.3 test and meets the transportation requirements for dangerous goods, including lithium-ion batteries.
- The transportation service provider must be qualified to transport dangerous goods.
- Before transportation, check that the battery package is intact and that there are no abnormal odour, leakage, smoke or signs of burning. Otherwise, the batteries must not be transported.
- Keep no more than **6** cartons of batteries in one stack.
- Load or unload batteries with caution. Otherwise, the batteries may short circuit or become damaged like leakage or cracking, catch fire or explode.

NOTICE

After installing the battery on site, keep the original packaging containing the lithium-ion battery identification. When the battery needs to be returned to the factory for repair, use the original packaging to transport it.

Storage

NOTICE

- The battery remains 50% power when it is sent from the factory.
- The longer the battery is stored, the lower the SOC. If the battery remaining voltage fails to reach the startup voltage requirement, the battery may be damaged.

The battery should be installed within 6 months since delivered from the factory and used with compatible inverters.

Environment requirements for storage within one month:

- Temperature range: -20 ℃ to +45 ℃
- Relative humidity: 5% to 95% RH

Environment requirements for storage within one year:

- Temperature range: 0℃ to 35 ℃
- Relative humidity: < 85% RH

3.2. Inverter transportation and storage

DANGER

- Observe all safety symbols displayed on the packaging prior to transportation.
- Maintain stable driving conditions throughout transportation to prevent the inverter from colliding or dropping, as internal power components may be damaged, potentially causing short circuits or explosions upon subsequent power-up.
- Ensure that transport vehicles are not overloaded and that weight is distributed evenly.
- Do not drill holes into the product or its housing for any transportation-related purpose. Such modifications can damage the structural integrity and functionality of the device.
- Do not store or transport the equipment in damp, flammable, or explosive environments.

WARNING

- When moving the equipment, use the original packaging or dedicated handling tools to avoid muscle strain from lifting heavy objects alone.
- Wear suitable protective gloves when manually handling equipment.
- When lifting the inverter, grip it firmly at the designated handles and support the base. Keep the unit level to avoid dropping.
- Do not unpack the inverter packaging if it is not used immediately.
- Do not store the inverter in areas exposed to direct sunlight, rain, strong electric fields, or high humidity. Such conditions can cause overheating, electrical failure, or corrosion.
- Do not store inverters near chemically corrosive substances or in locations prone to pests or rodents. These can cause irreversible damage to housing and internal components.
- Do not stack heavy objects on top of the inverter enclosure during storage.
- Do not tilt or invert the packaging. Maintain the upright orientation as indicated on the carton to prevent internal displacement or component stress.

CAUTION

- Store inverters in a clean, dry, and well-ventilated area to avoid moisture buildup and overheating.
- Promptly replace any packaging materials that have been damaged by insects or rodents.

NOTICE

- It is recommended to retain the original packaging for future relocation or return for repair.
- Before long-term storage (exceeding 6 months), ensure the storage environment meets requirements and periodically inspect the packaging integrity. Check for environmental damage, pest intrusion, or packaging degradation.

Storage environment requirements:

- Temperature range: -40 ℃ to +60 ℃
- Relative humidity: 5% to 95% RH
- Corrosion protection level: C4

4. Installation

4.1. Installation environment requirements

- Do not expose the device to direct solar irradiation as this could cause power derating due to overheating.
- The installation environment must be free of inflammable or explosive materials.
- The device must be installed in a place away from any heat source.
- Do not install the device at a place where the temperature changes extremely.
- Keep the device away from children.
- Do not install the device in the bedroom, toilet, or bathroom.
- When installing the device at the garage, keep it away from the driveway.
- Keep the device from water sources such as taps, sewer pipes and sprinklers to prevent water seepage.
- For outdoor installation, keep the device away from direct sunlight, rain and snow.
- Ensure the inverter is installed in a well-observed area where the LED display panel can be easily read for real-time status checks.

4.2. Plan the installation site

Install the product vertically.

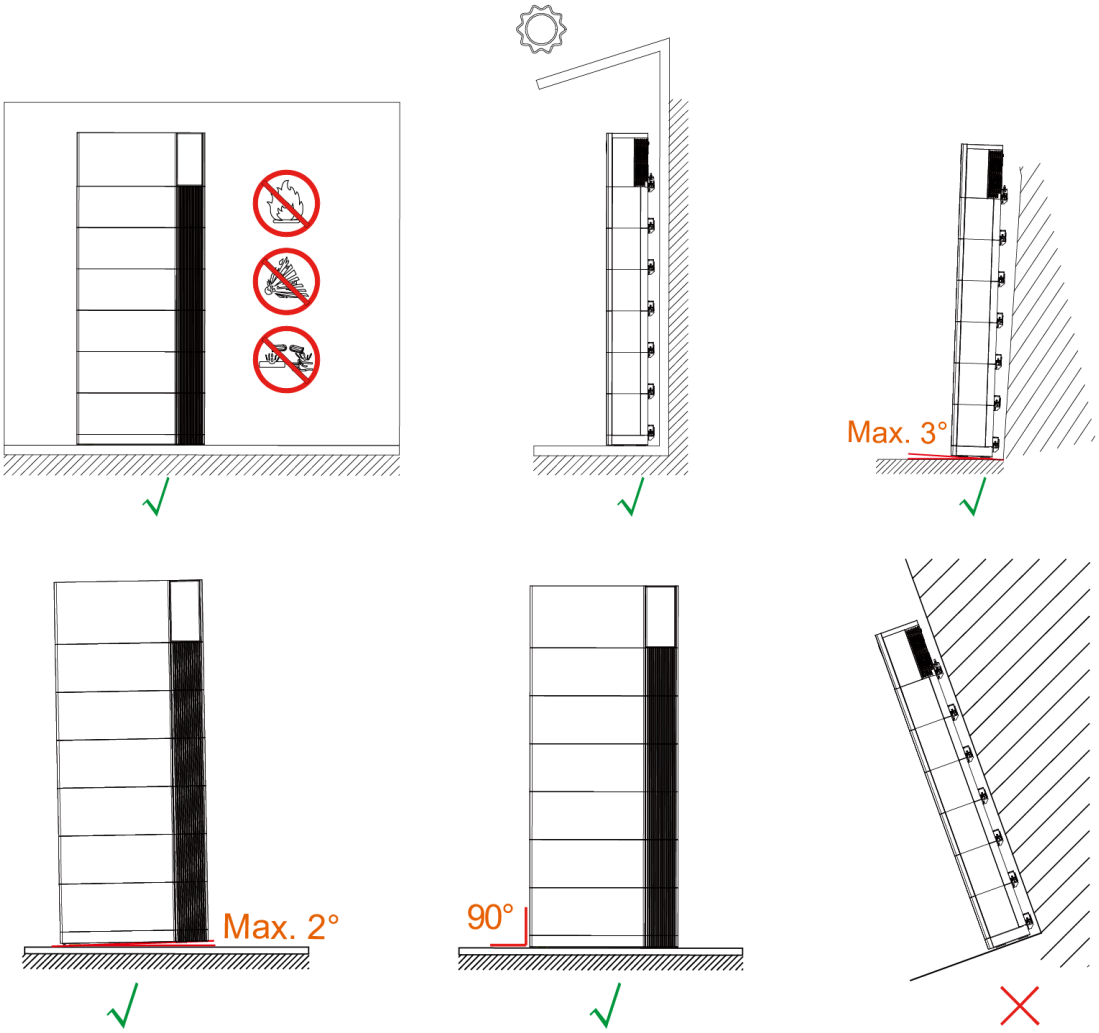

Keep enough clearance around the product to ensure proper ventilation.

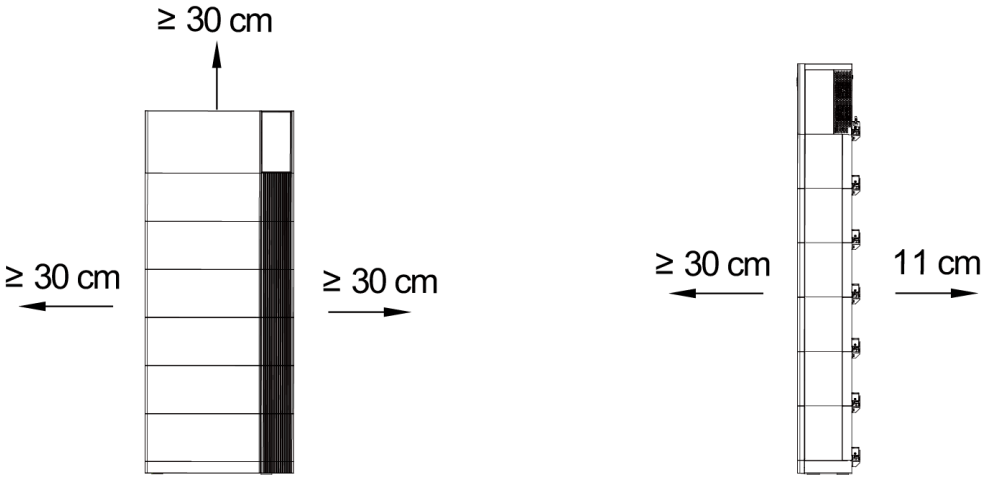

4.3. Installation tools

Installation tools include but are not limited to the following recommended ones. Use other auxiliary tools on site if necessary.

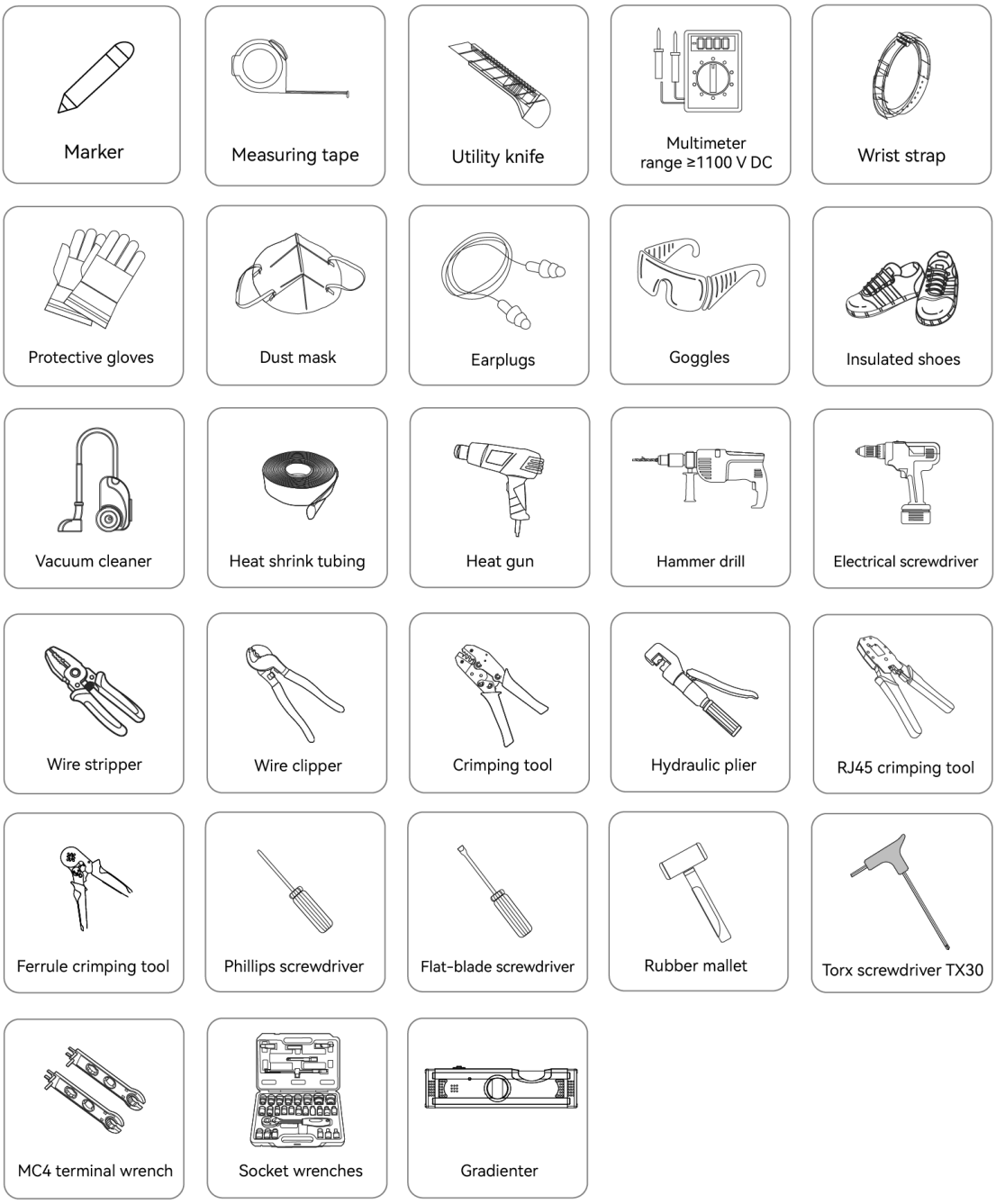

Figure 4.1. Suggested installation tools

4.4. Packing list

Inverter

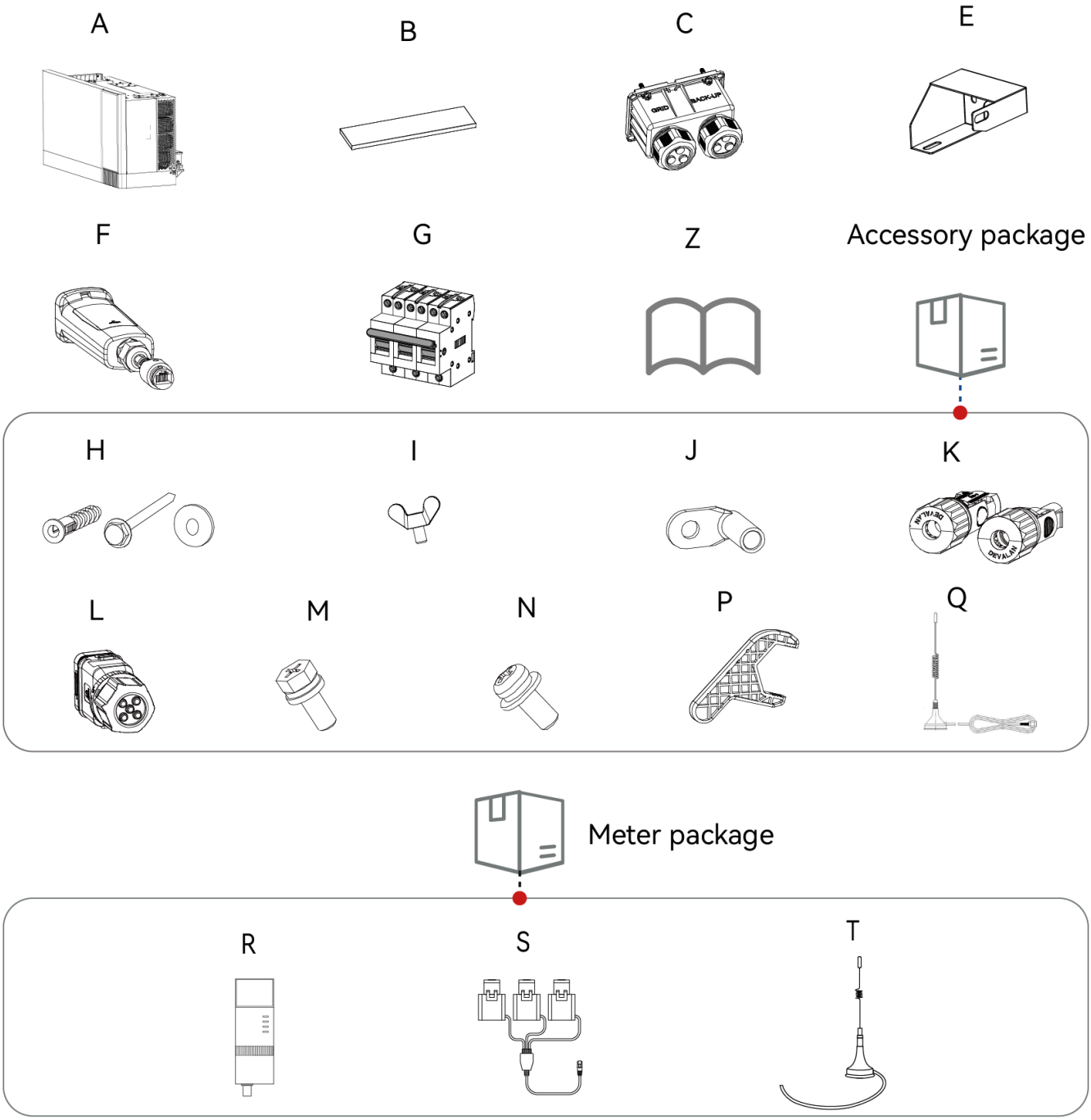

Number	Quantity	Designation
A	1	Inverter with the battery base
B	1	Protective cover of inverter
C	1	AC protective cover
E	1	Anti-theft bracket
F	1	Communication module
G	1	Manual transfer switch

Number	Quantity	Designation
H	1	Bolts and gaskets for anti-theft bracket
I	1	Hand-tighten screw
J	SC10-5-90: 5 SC10-16-5-90: 10	AC cable terminals: • SC10-5-90: For 6-8 mm^2 cables • SC16-5-90: For 10-16 mm^2 cables
K	3 or 4	PV connector. The quantity varies depending on different machine models.
L	1	20-pin connector
M	3	M6*16 screw
N	1	M4*10 screw.
P	1	Wrench for securing the AC cover
Q	1	Antenna to be connected to the inverter.
R	1	Meter
S	3	Current transformer (CT)
T	1	Antenna to be connected to the meter.
Z	1	Documentation

The following figure and table show the components for installing the battery base.

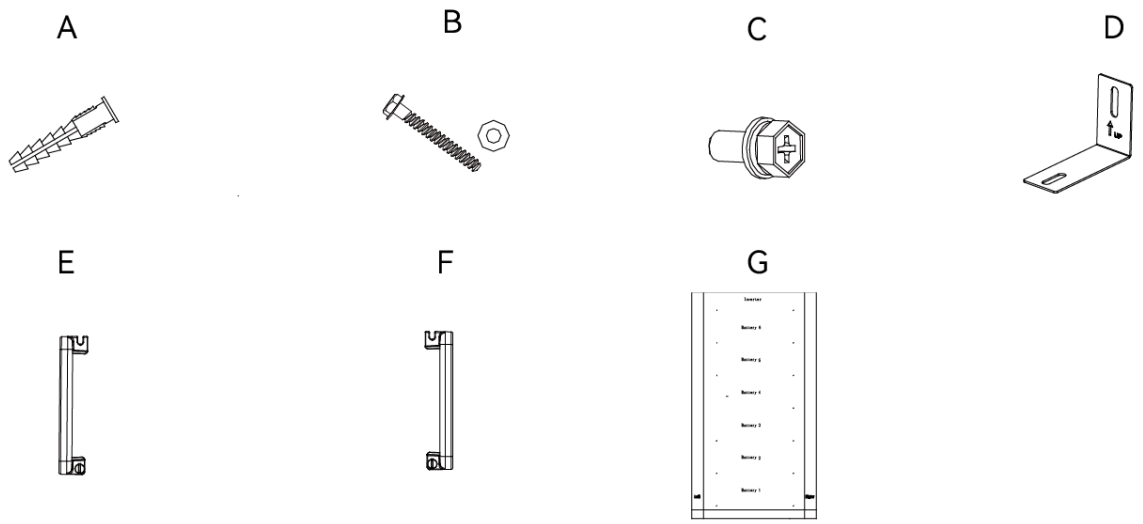

Number	Quantity	Designation
A	2	M6*80 expansion bolt
B	2	ST6*50 screw and gasket set
C	2	M6*16 screw
D	2	Locking bracket
E	1	Left handle
F	1	Right handle
G	1	Positioning cardboard

Battery pack

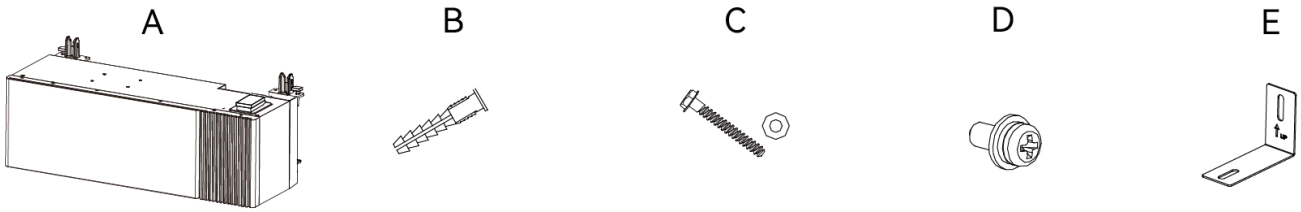

Number	Quantity	Designation
A	1	Battery pack
B	2	M6*80 expansion bolt
C	2	ST6*50 screw and gasket set
D	4	M6*16 screw
E	2	Locking bracket

Wall bracket

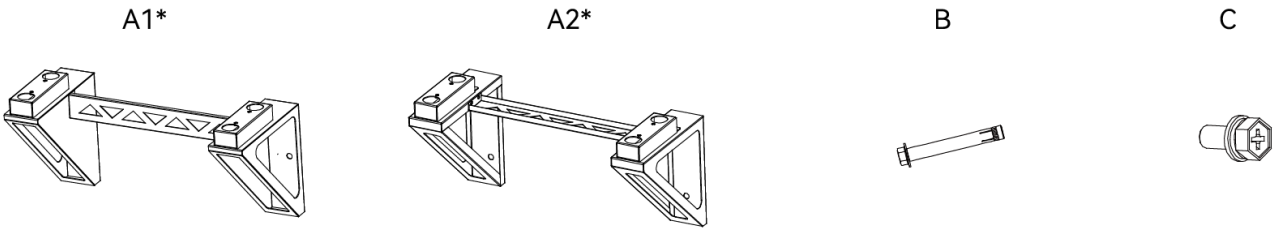

Number	Quantity	Designation
A1/A2	1	Wall bracket. Depending on different shipments, either A1 or A2 is included in this package. Refer to the actual product you received.
B	4 or 6	M12*100 expansion bolt. • For the wall bracket with 3 installation holes, 6 bolts are provided. • For the wall bracket with 2 installation holes, 4 bolts are provided.
C	2	M6*16 screw

4.5. Dimension

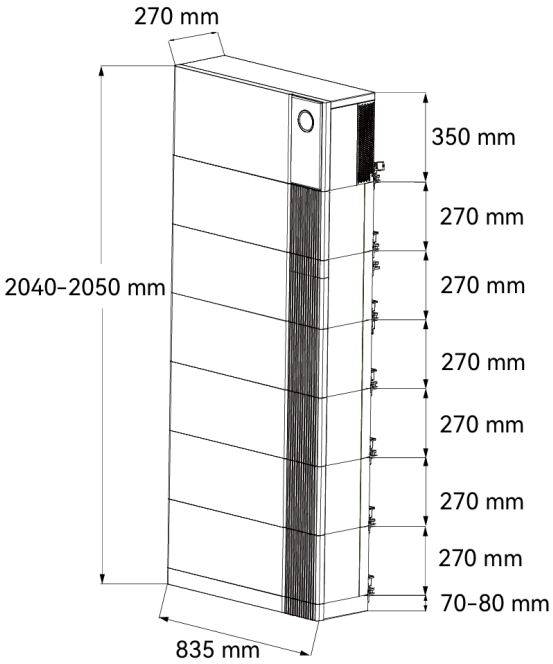

Figure 4.2. Dimensions

4.6. Ground mounting

Note: For ground mounting, a maximum of 6 batteries is supported.

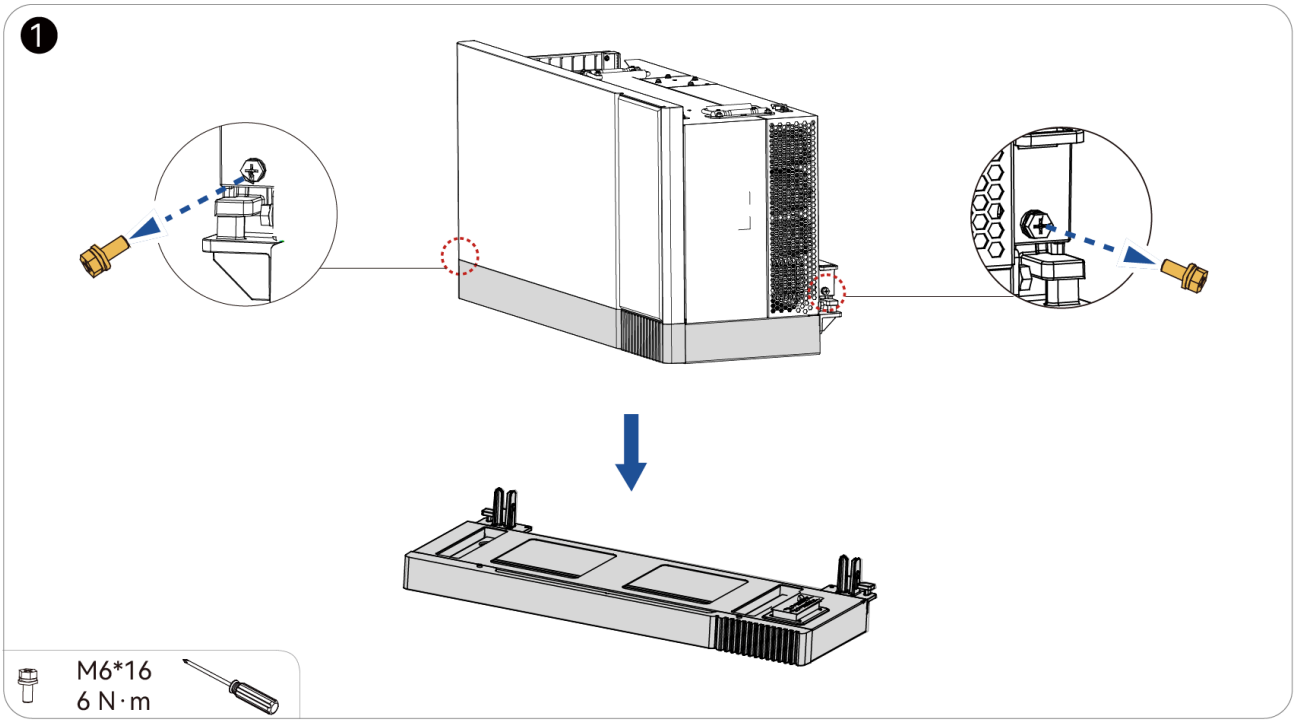

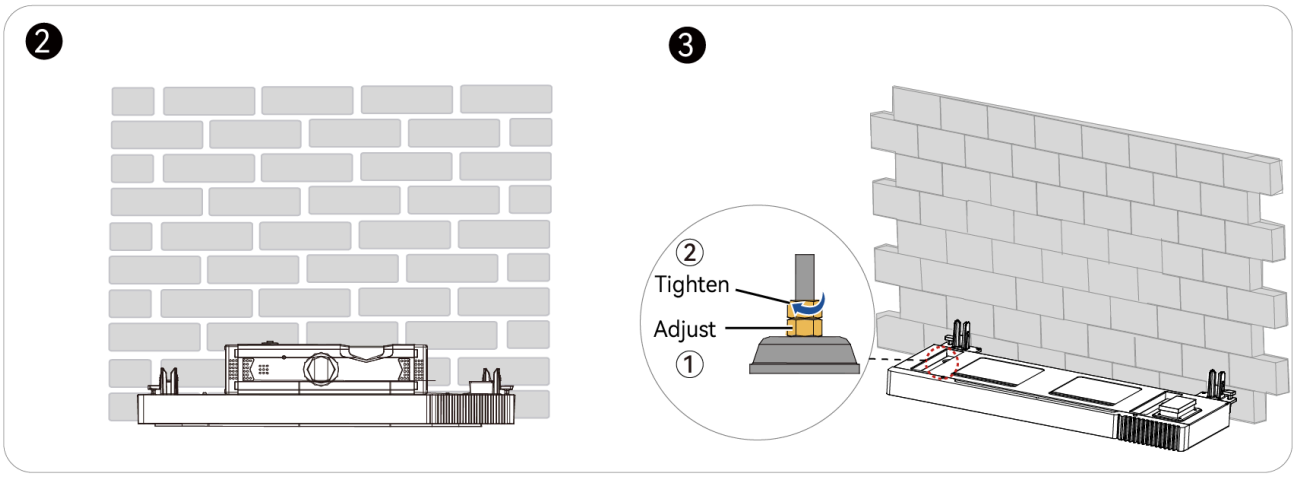

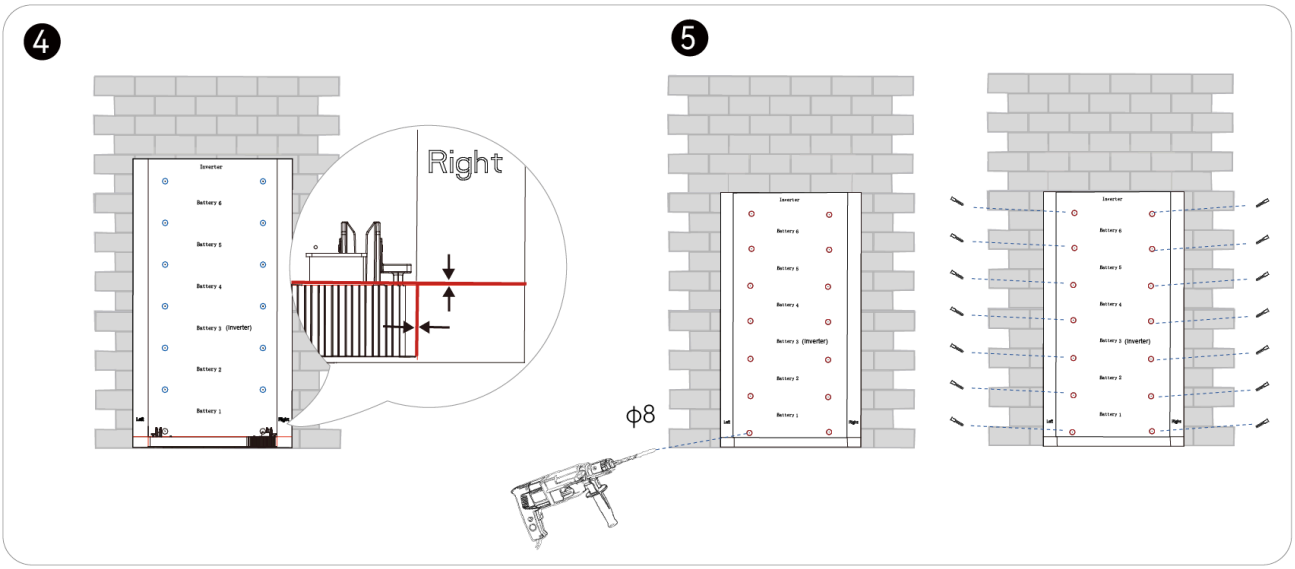

Note: Before drilling, put the battery base aside to keep the blind-mate ports dust-free.

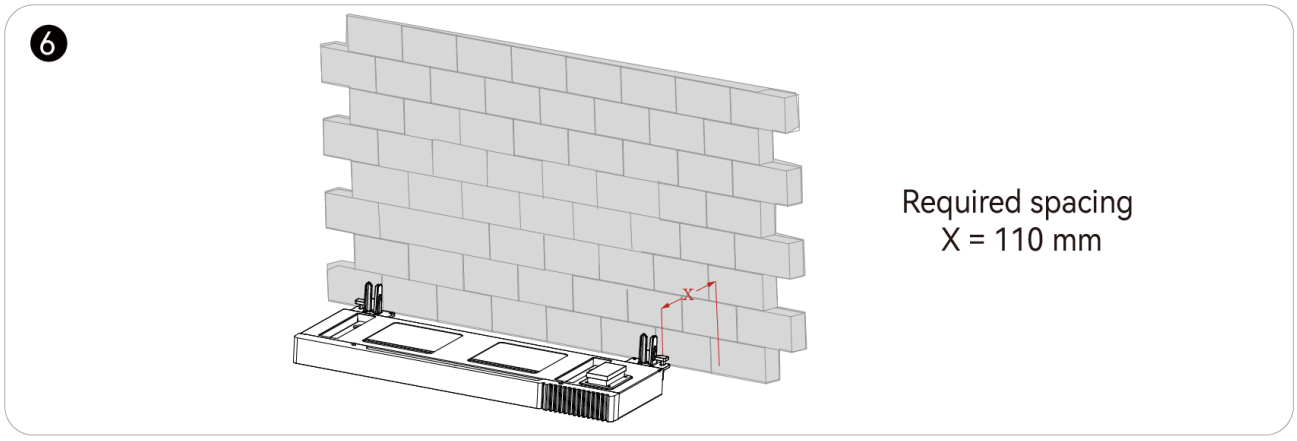

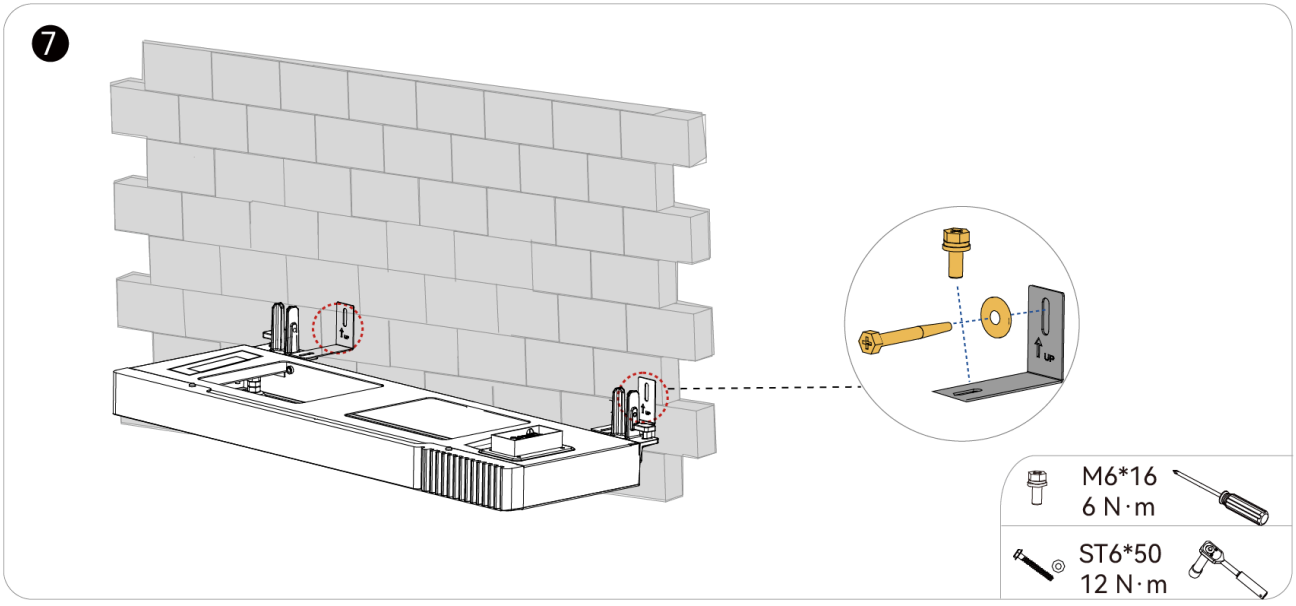

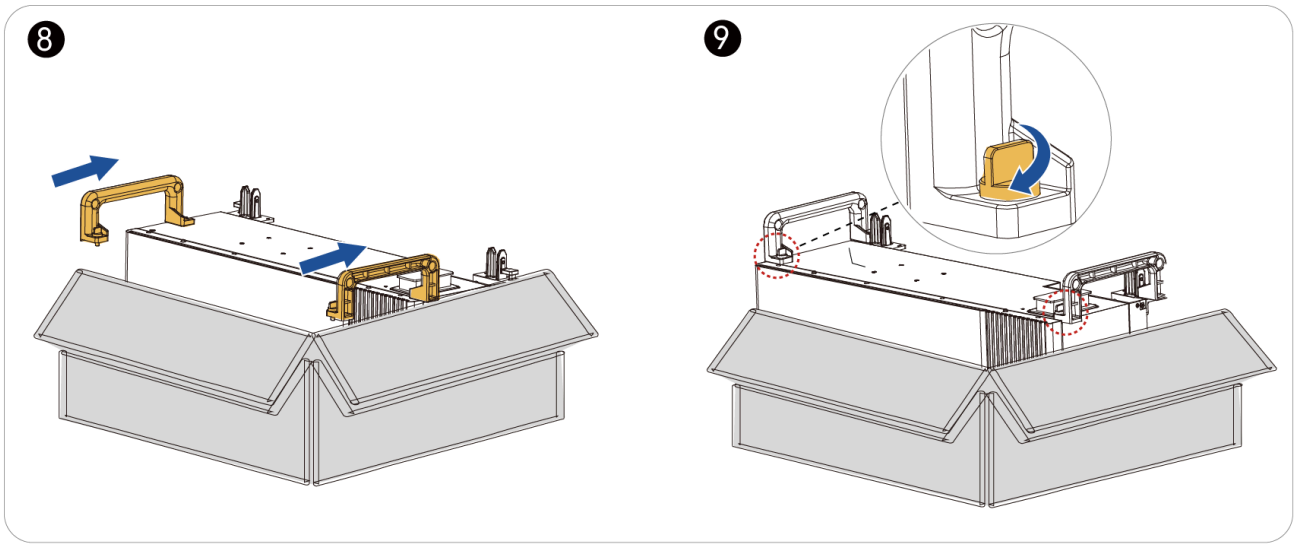
8
9

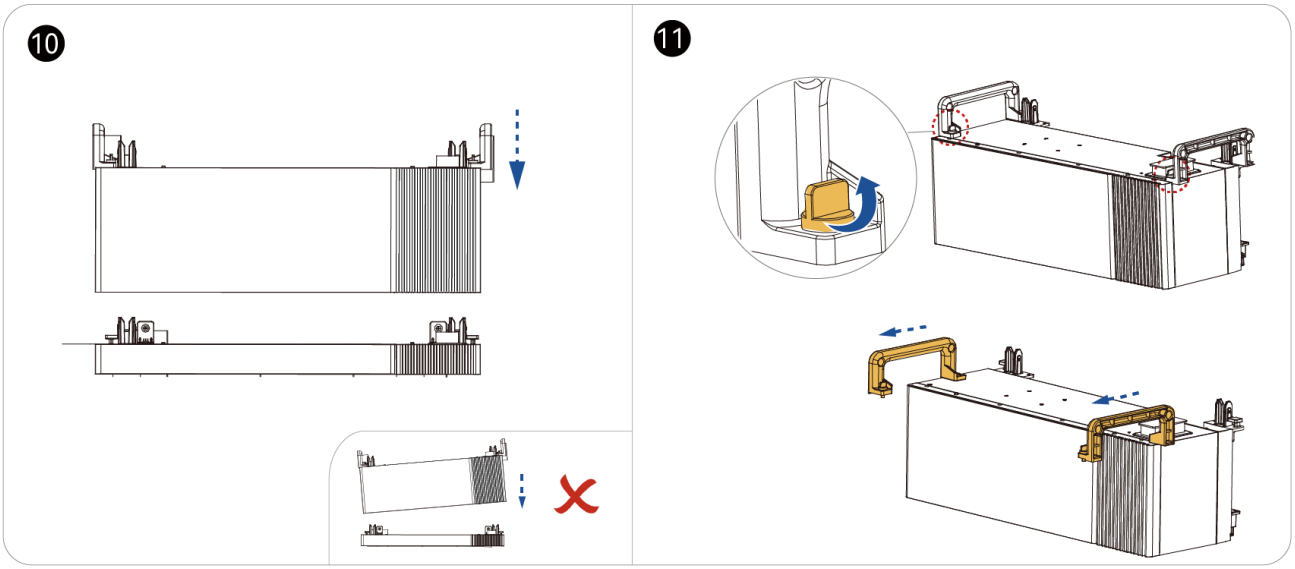
10
11

12

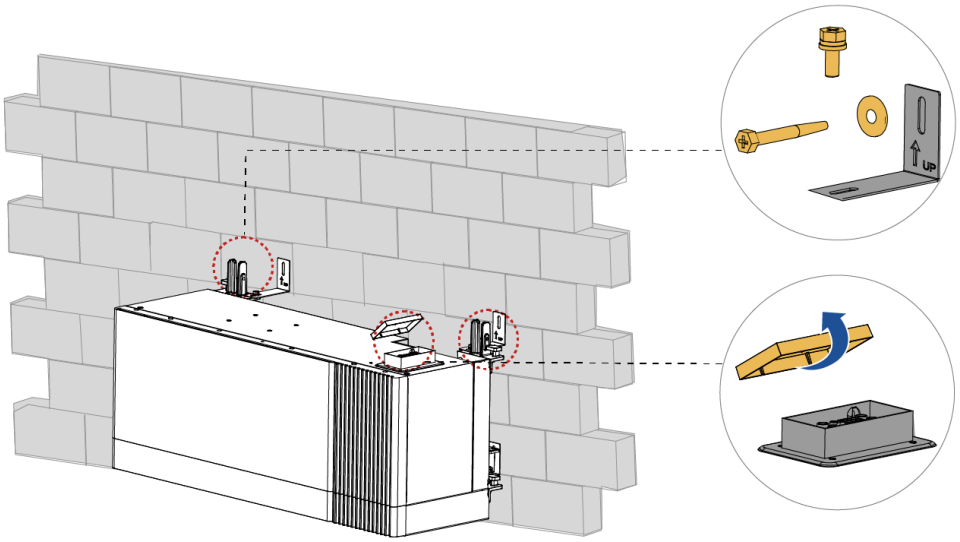

M6*16: 6 N·m

ST6*50: 12 N·m

13

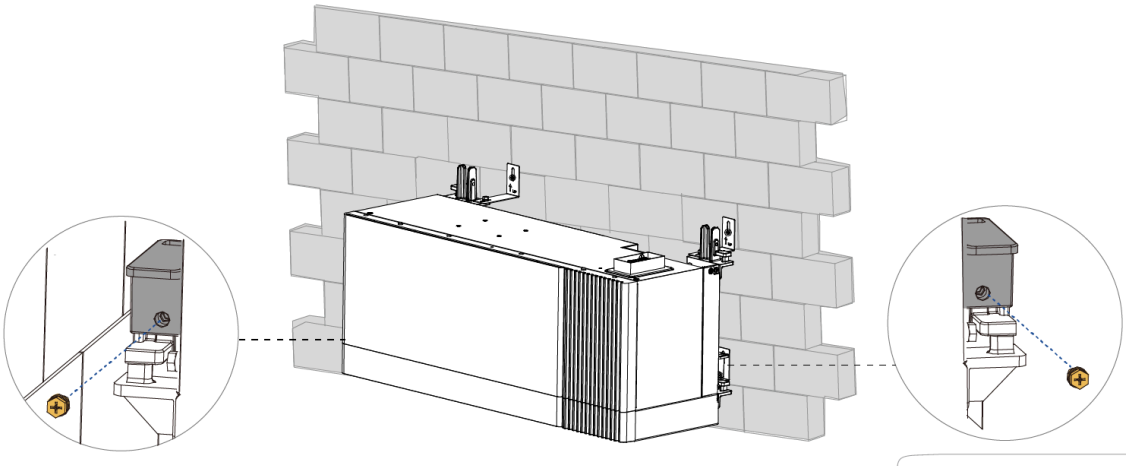

M6*16: 6 N·m

15

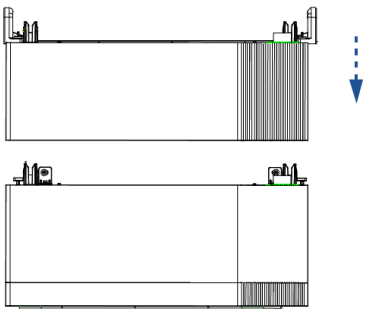

NOTICE

The apex angle of the lifting slings should not exceed 100° to ensure safe lifting and transport.

16 Install more batteries by taking the same steps as the first one.

17

≥4 batteries: recommend using a lifting device.

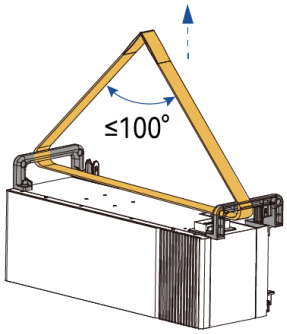

NOTICE

The apex angle of the lifting slings should not exceed 100° to ensure safe lifting and transport.

18

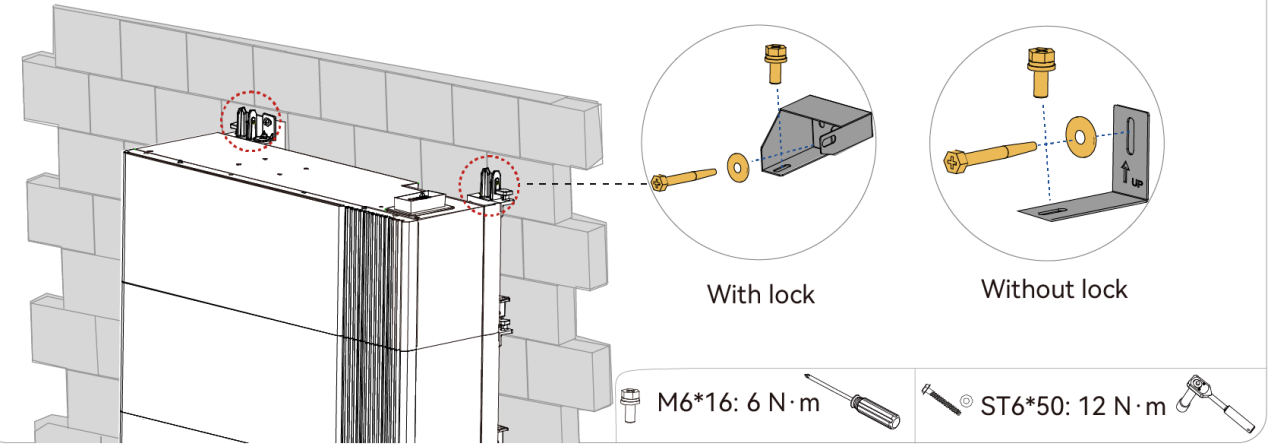

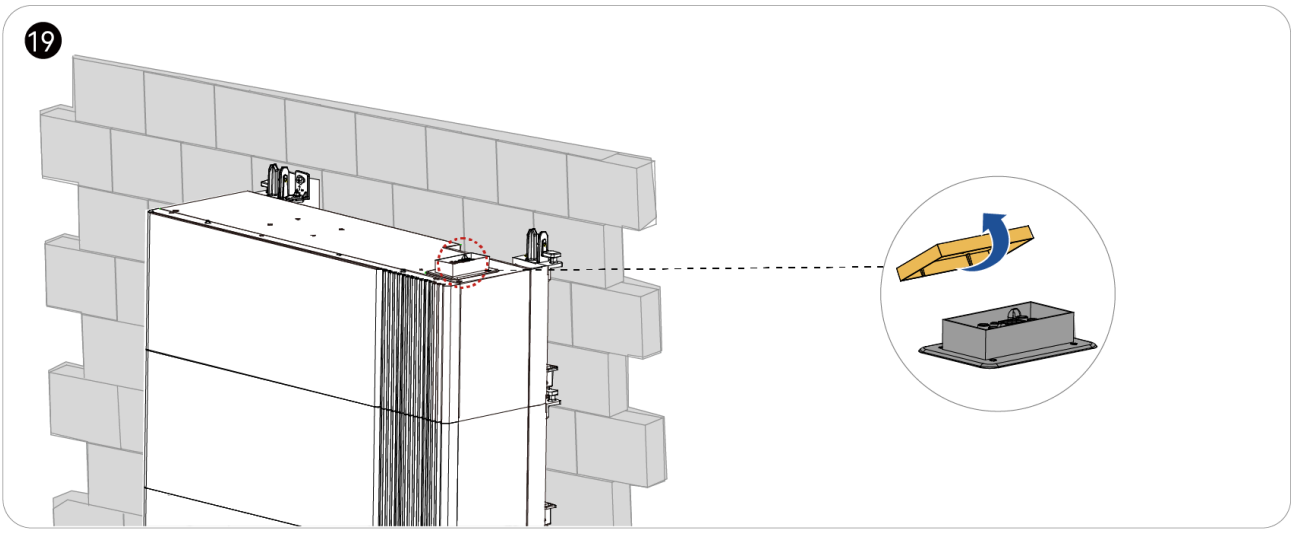

NOTICE

The apex angle of the lifting slings should not exceed 100° to ensure safe lifting and transport.

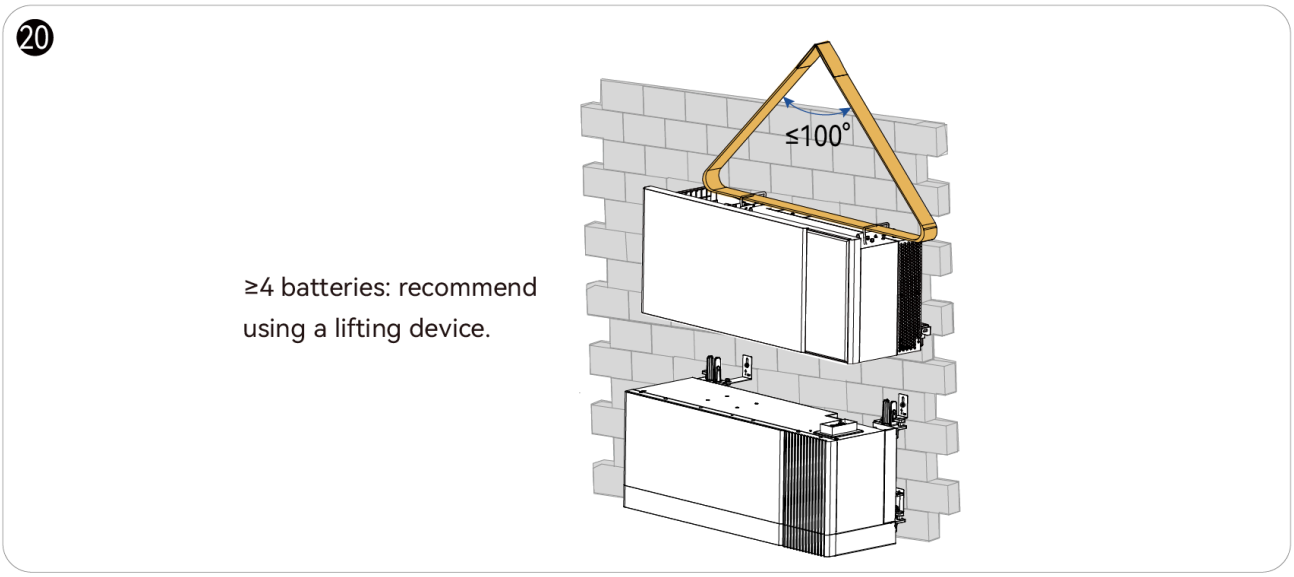

NOTICE

The apex angle of the lifting slings should not exceed 100° to ensure safe lifting and transport.

21

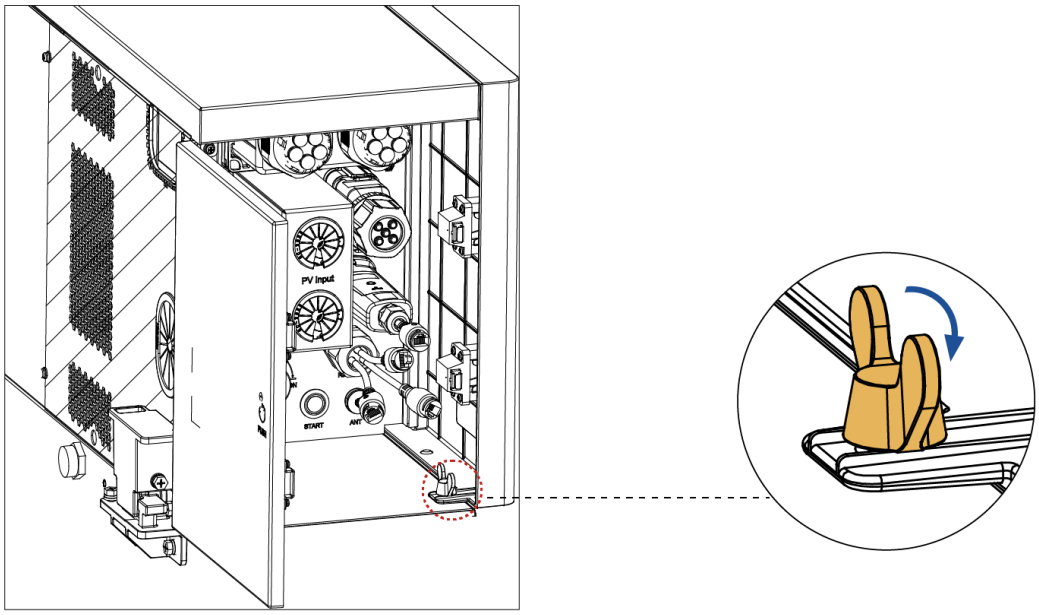

22

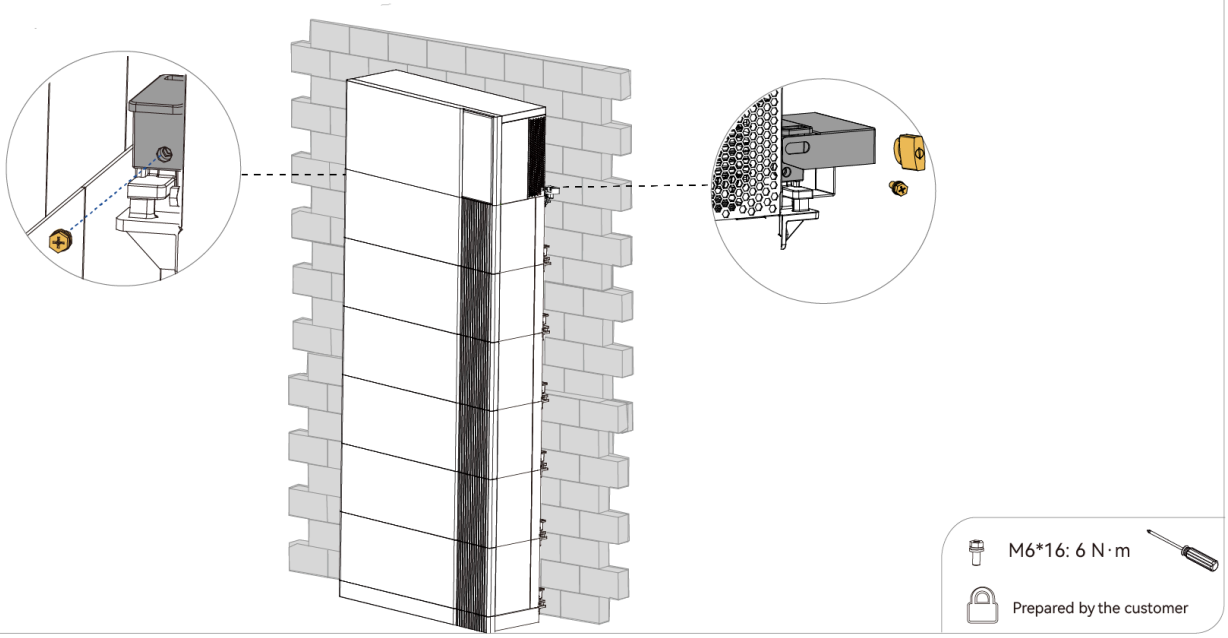

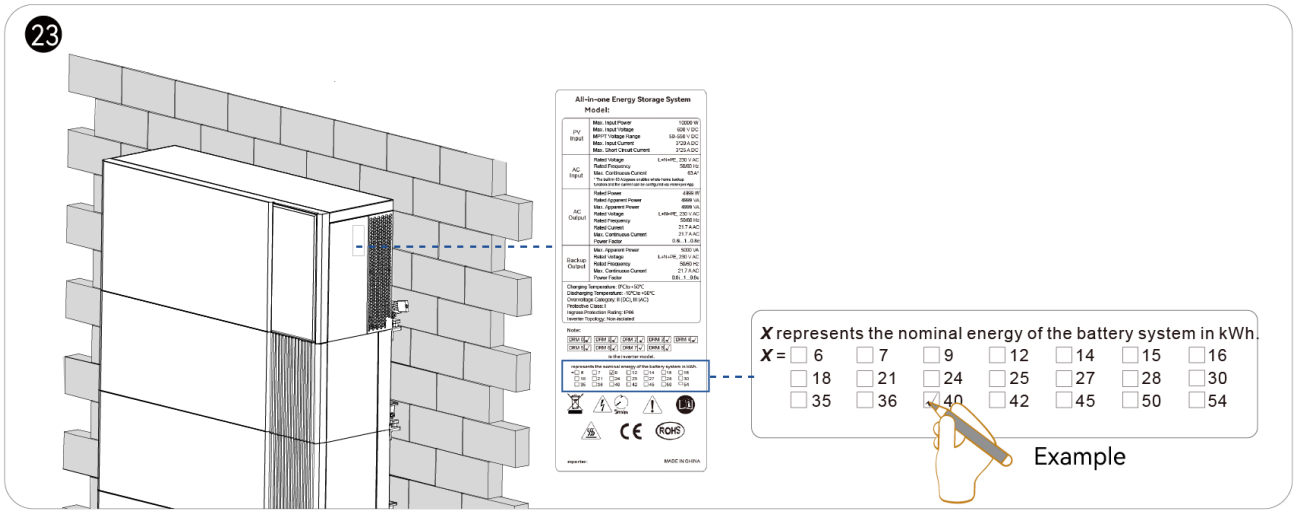
23
All-in-one Energy Storage System
Model:
X represents the nominal energy of the battery system in kWh.
X = 6 7 9 12 14 15 16
18 21 24 25 27 28 30
35 36 40 42 45 50 54
Example

4.7. Wall mounting

Note: For wall mounting, a maximum of 2 batteries is supported.

❶ Remove the bumper feet.

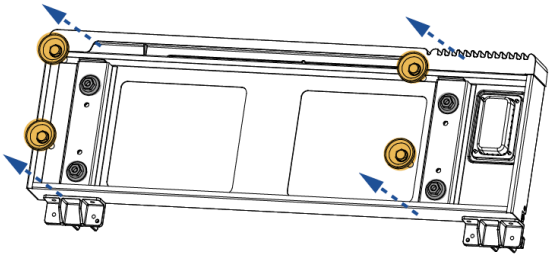

❷

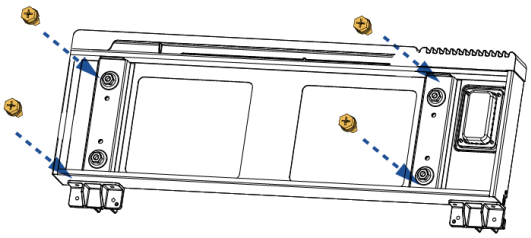

M6*16 6 N·m

❸ For wall bracket with 2 installation holes

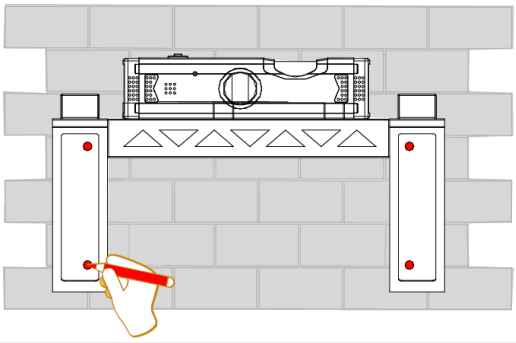

For wall bracket with 3 installation holes

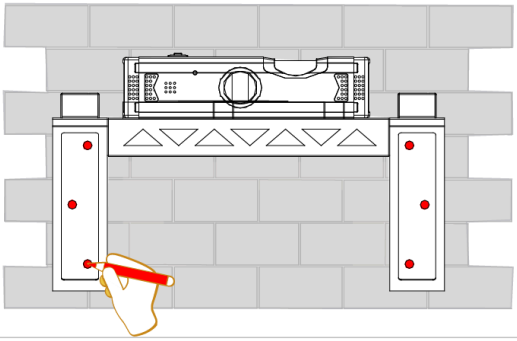

Note: The installation height of the wall bracket can be decided according to the actual condition and local regulations of the installation site.

❹

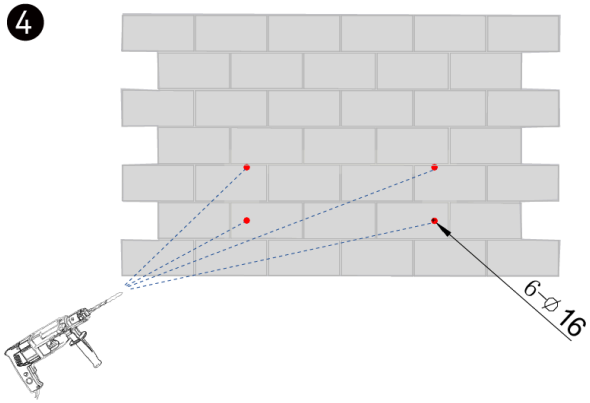

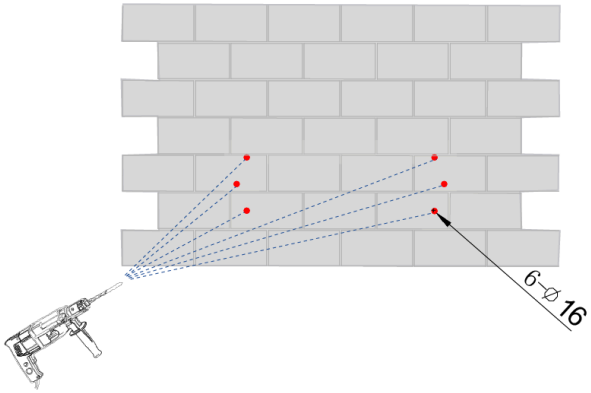

5

For wall bracket with 2 installation holes

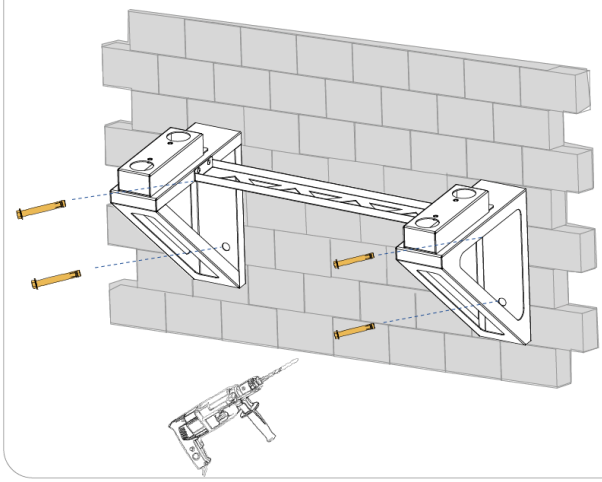

For wall bracket with 3 installation holes

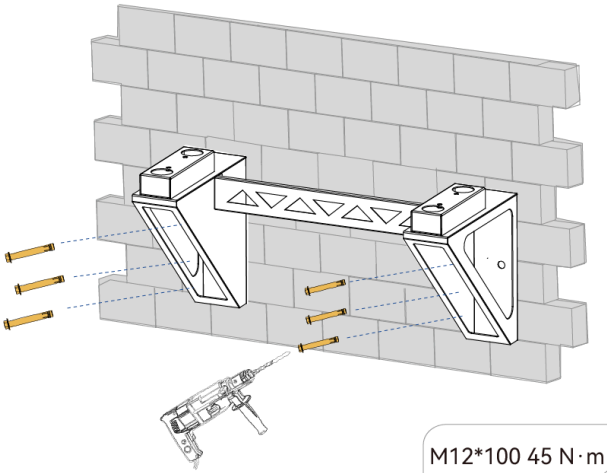

M12*100 45 N·m

6

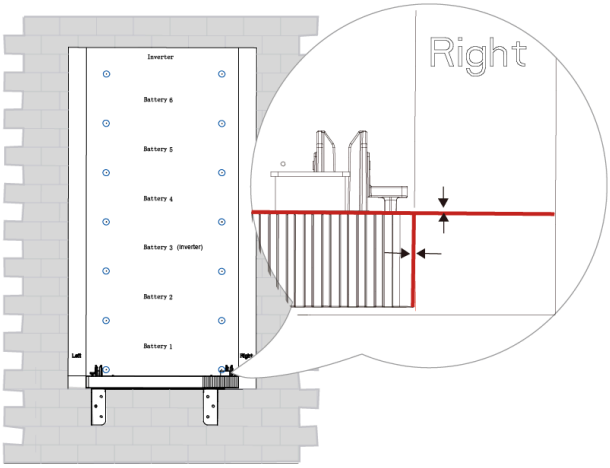

7

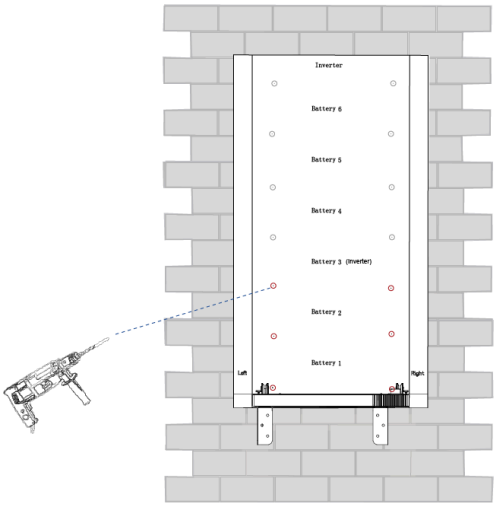

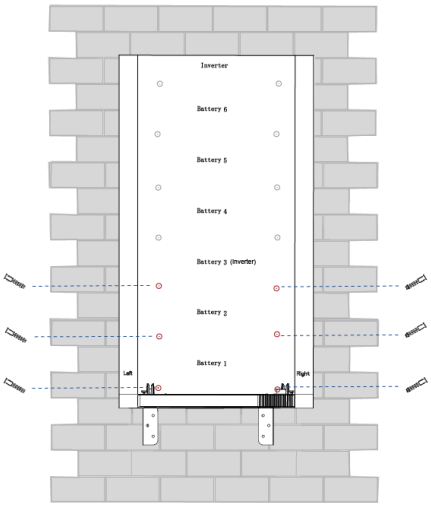

❽

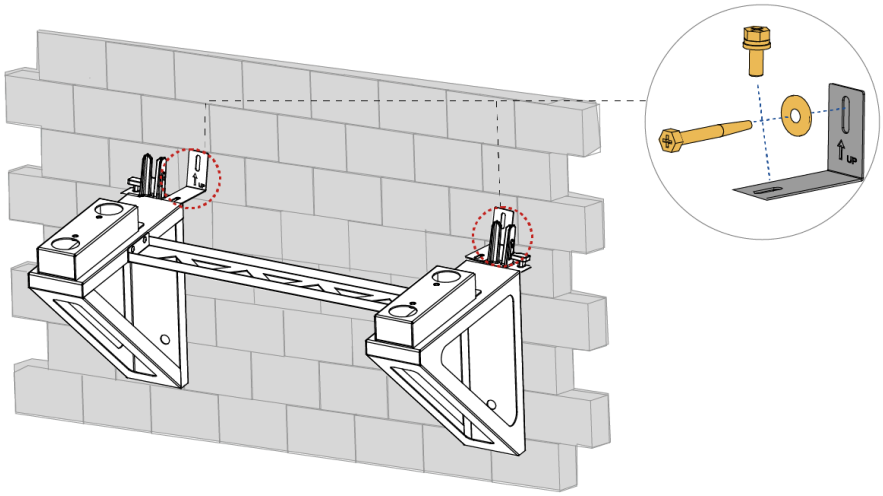

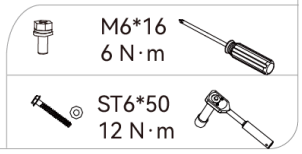

❾ Install the batteries and inverter by taking the same steps as the ground mounting.

❿

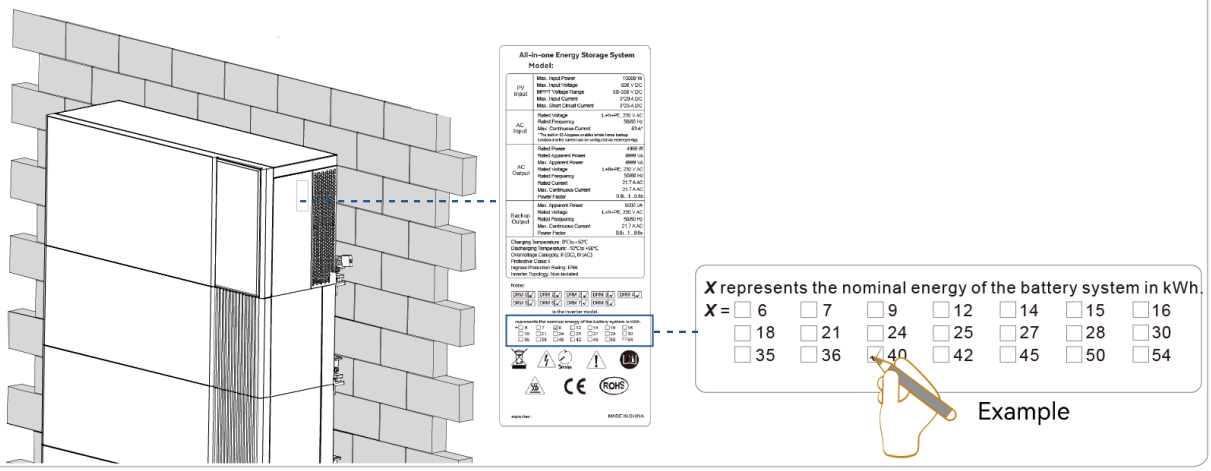

5. Electrical connection

5.1. Europe

The backup PE line and earthing bar must be grounded properly. Otherwise, the backup function may be inactive during a power outage.

Whole home backup solution

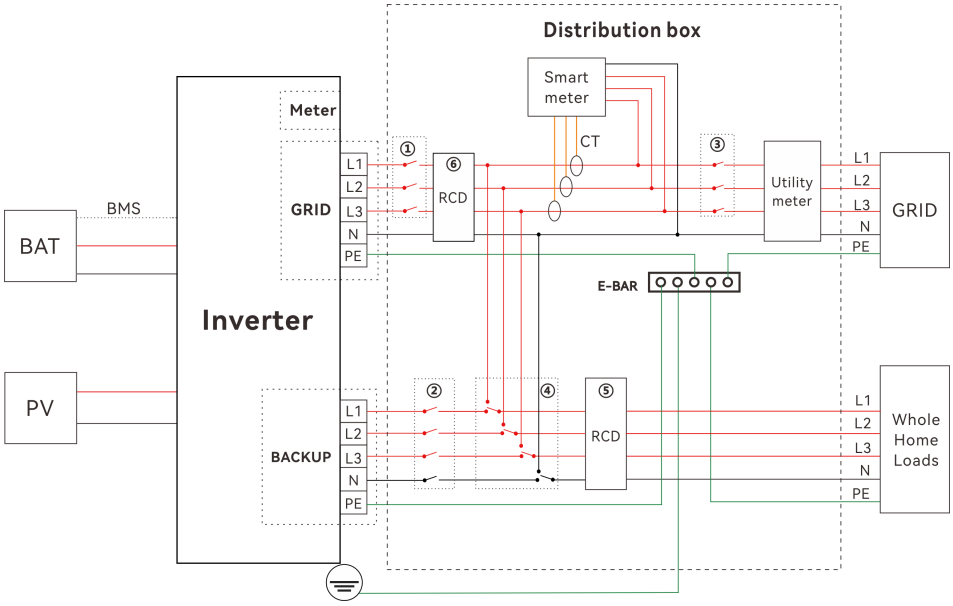

Product model	① AC breaker (grid)	② AC breaker (backup loads)	③ AC breaker (utility meter)	④ Manual transfer switch	⑤⑥ RCD for on-grid/backup loads[1]
EK70 HS5-8K-T3-X	63A/400 V	63A/400 V	Main breaker	63A/230 V	30 mA
EK70 HS5-10K-T3-X	63A/400 V	63A/400 V	Main breaker	63A/230 V	30 mA
EK70 HS5-12K-T3-X (-IE)	63A/400 V	63A/400 V	Main breaker	63A/230 V	30 mA
EK70 HS5-15K-T3-X	63A/400 V	63A/400 V	Main breaker	63A/230 V	30 mA
EK70 HS5-20K-T3-X	63A/400 V	63A/400 V	Main breaker	63A/230 V	30 mA

Table 5.1. Recommended AC breaker and RCD specifications

1. The on-grid RCD is optional since the inverter is integrated with a residential current monitoring unit (RCMU). However, if the external RCD must be installed according to the local regulations, install a type A RCD of action current 30 mA or higher.

Note: The values in the above table are recommendations only and can be set to other values based on the actual conditions.

Partial backup solution

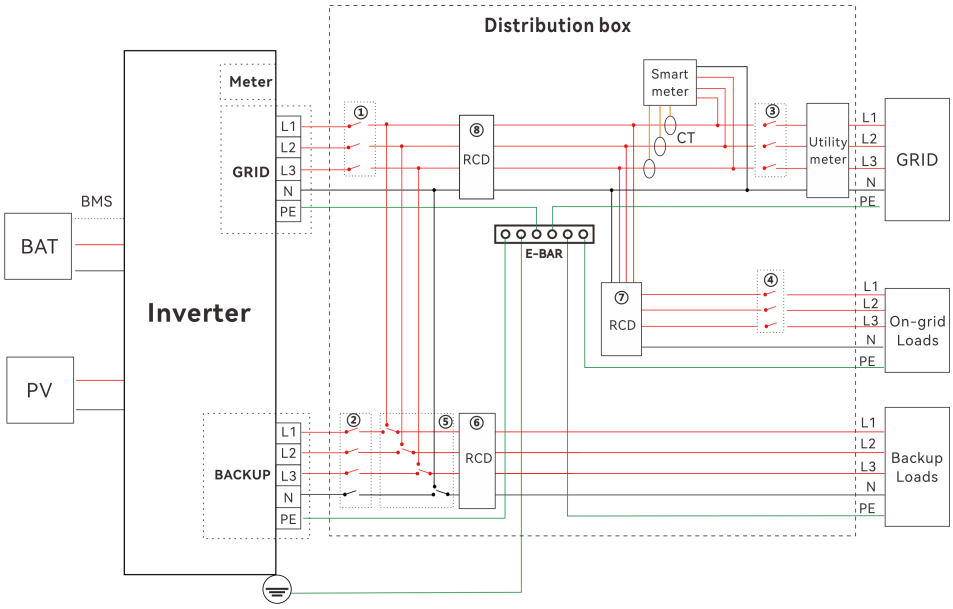

Product model	① AC breaker (grid)	② AC breaker (backup loads)	③ AC breaker (utility meter)	④ AC breaker (on-grid loads)	(Optional) ⑤ Manual transfer switch[1]	⑥⑦ ⑧ RCD for on-grid/ backup loads[2]
EK70 HS5-8K-T3-X	32 A/400 V	Depend on loads	Main breaker	Depend on loads	Depend on loads	30 mA
EK70 HS5-10K-T3-X	40 A/400 V	Depend on loads	Main breaker	Depend on loads	Depend on loads	30 mA
EK70 HS5-12K-T3-X (-IE)	50 A/400 V	Depend on loads	Main breaker	Depend on loads	Depend on loads	30 mA
EK70 HS5-15K-T3-X	63 A/400 V	Depend on loads	Main breaker	Depend on loads	Depend on loads	30 mA
EK70 HS5-20K-T3-X	63 A/400 V	Depend on loads	Main breaker	Depend on loads	Depend on loads	30 mA

Table 5.2. Recommended AC breaker and RCD specifications

1. For partial backup solution, the manual transfer switch is optional. Install it on demand.
2. The on-grid RCD is optional since the inverter is integrated with a residential current monitoring unit (RCMU). However, if the external RCD must be installed according to the local regulations, install a type A RCD of action current 30 mA or higher.

Note: The values in the above table are recommendations only and can be set to other values based on the actual conditions.

5.2. Inverter ports and switches

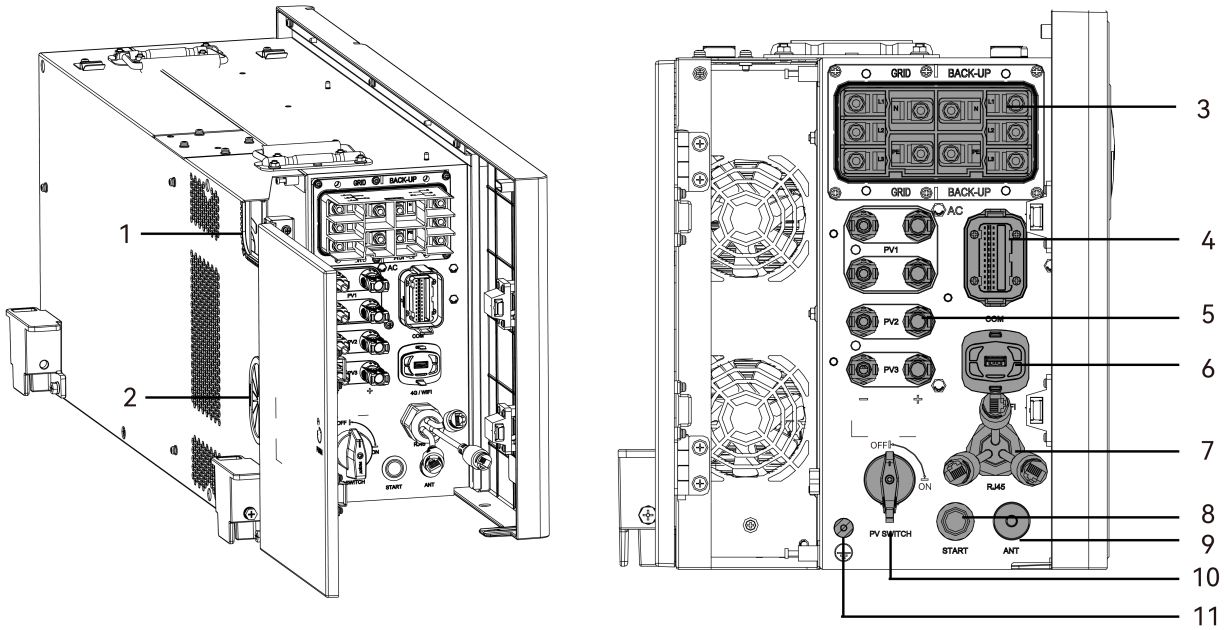

Callout	Silkscreen	Description
1	/	The cable entry hole 1 for routing AC power cables.
2	/	The cable entry hole 2 for routing the following cables: • The grounding cable • The DC power cables • The communication cables
3	**AC** • **GRID** • **BACK-UP**	The connection ports for AC power cables. • **GRID**: for connecting to the public grid. • **BACK-UP**: for connecting to the home backup load.
4	**COM**	The connection port for communication cables from external devices like DI/DO devices.
5	**PV1, PV2, PV3**	The negative and positive PV input connection ports.
6	**4G/WIFI**	The connection port of the eSolar AIO3 Pro and 4G Pro communication modules.
7	**RJ45**	The RJ45 connection ports for **LAN1**, **LAN2**, and **DRMs** connections as labelled on the ports. **LAN1** and **LAN2** ports are reserved for future use.
8	**START**	For starting up the energy storage system.
9	**ANT**	The LoRa antenna connection port.
10	**PV SWITCH**	The PV switch that controls the connection to the PV array.

Callout	Silkscreen	Description
11	⏚	The grounding cable connection port.

Table 5.3. Inverter electrical ports

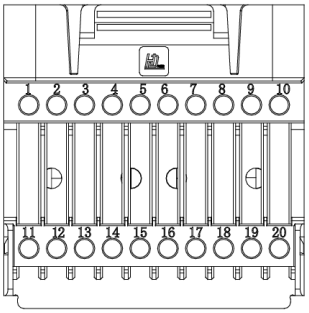

Number	Silkscreen	Description
1-6	/	Reserved for future use.
7	**DO1+**	Output connection for dry contact device 1.
8	**DO1-**	Output connection for dry contact device 1.
9	**DO2+**	Output connection for dry contact device 2.
10	**DO2-**	Output connection for dry contact device 2.
11	**PC 485A**	Reserved RS485 connection ports. The RS485 communication can be adjusted with the provided 120 Ω resistor controlled by **SW2** DIP switch.
12	**PC 485B**	
13	**Meter 485A**	For RS485 connections with the meter. The RS485 communication can be adjusted with the provided 120 Ω resistor controlled by **SW3** DIP switch.
14	**Meter 485B**	
15	**DI1+**	Input connection for dry contact device 1.
16	**DI1-**	Input connection for dry contact device 1.
17	**DI2+**	Input connection for dry contact device 2.
18	**DI2-**	Input connection for dry contact device 2.
19	**12V**	Port for providing 12V DC power supply to the external device.
20	**GND**	Port for grounding connection.

Table 5.4. 20-pin definition for COM port

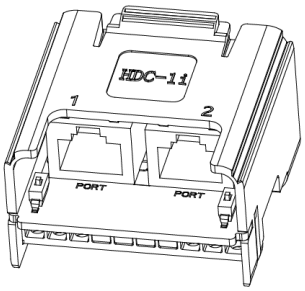

Figure 5.1. RJ45 ports for communication connector

Number	Silkscreen	Description
1	**PORT CAN**	Reserved port.

Number	Silkscreen	Description
2	**DSP CAN**	Reserved port.

5.3. Prepare the cables

Grounding cable specification

Cable type	Recommended cross-sectional area range (mm^2)
Grounding cable	6

AC grid and backup cable specification

Prepare the following outdoor high-temperature (≥105℃) cables for AC grid and backup load connections:

Solution	AC grid cable type	Recommended cross-sectional area (mm^2)	Recommended conductor material
• Whole home backup • Partial backup	One five-wire cable	16	Copper
	Five separated cables	16	Copper

Table 5.5. AC grid cable specification

Solution	AC backup cable type	Cross-sectional area (mm^2)		Recommended conductor material
		Range	Recommended value	
Whole home backup	One five-wire cable	10-16	16	Copper
	Five separated cables	/	16	Copper

Table 5.6. AC backup cable specification for whole home backup

Solution	Model	AC backup cable type	Cross-sectional area range (mm^2)		Recommended conductor material
			Range	Recommended value	
Partial backup	• HS5-8K-T3-X • HS5-10K-T3-X • HS5-12K-T3-X • HS5-12K-T3-X-IE	One five-wire cable	4-6	6	Copper
		Five separated cables	/	6	Copper
	HS5-15K-T3-X HS5-20K-T3-X	One five-wire cable	6-8	6	Copper
		Five separated cables	/	6	Copper

Table 5.7. AC backup cable specification for partial backup

PV cable specification

Cross-sectional area range (mm^2)		Recommended conductor material
Range	Recommended value	
5.0–6.0	6.0	Outdoor copper wire cable, complying with 1000 V DC

Communication cable specification

Terminals	Cable cross-sectional area(mm^2)	Cable outer diameter (mm)	Insulation off (mm)	
			External protective layer	Wire insulation
1 - 10	0.5 - 0.75	4.5 - 6.5	55	7.5
11 - 20	0.2 - 0.5		33	7.5

5.4. Connect the grounding cable

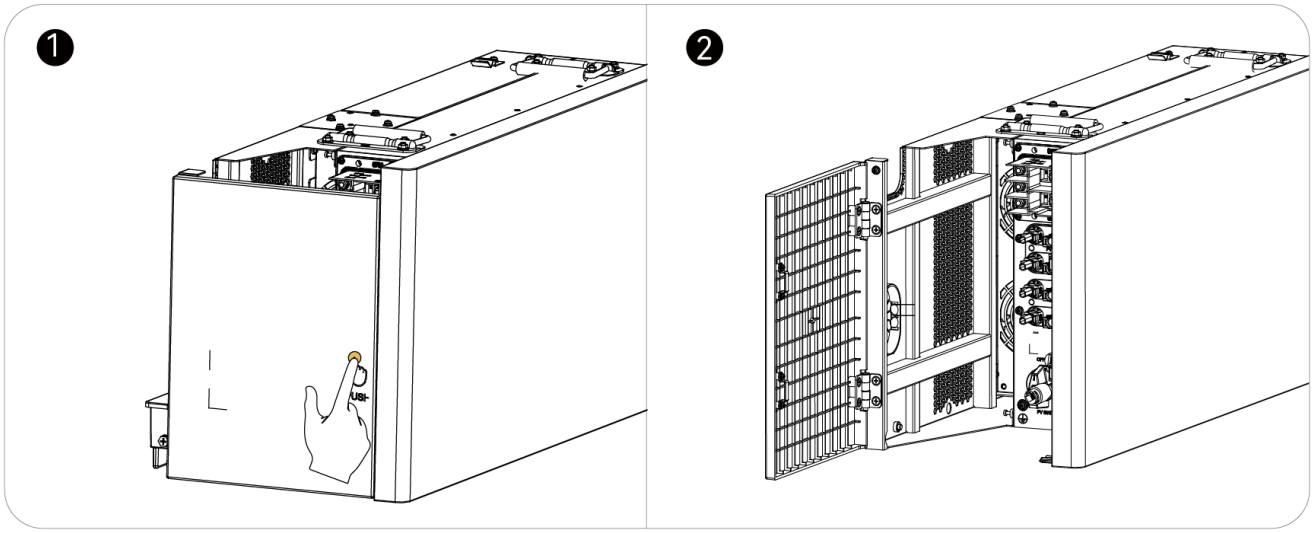

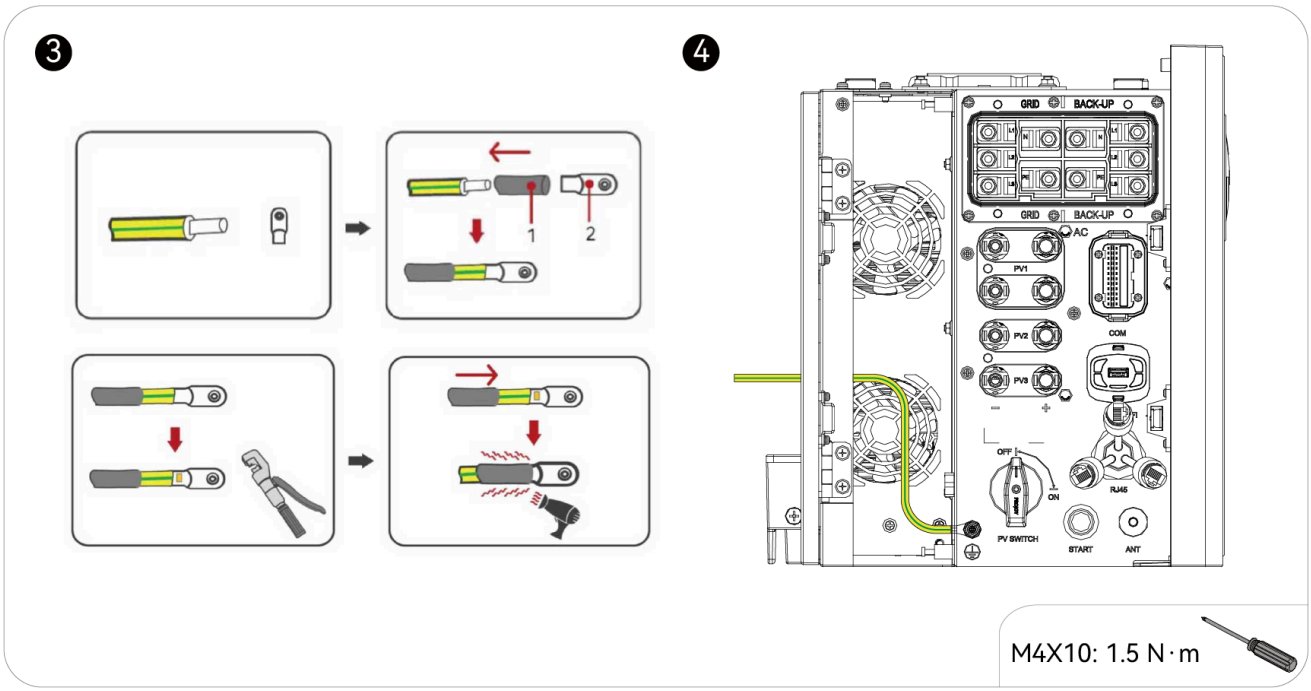

5.5. Connect the AC power cables

NOTICE

Products are subject to continuous updates. The printed guide may not reflect the latest changes. If there is any inconsistency between the received product and the printed guide, see the latest electronic Quick Guide or User Manual.

WARNING

Do not connect the grid cables to the **BACK-UP** terminal.

Do not connect the backup load to the **GRID** terminal.

AC connections

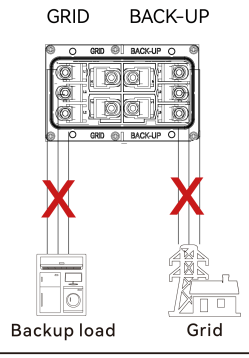

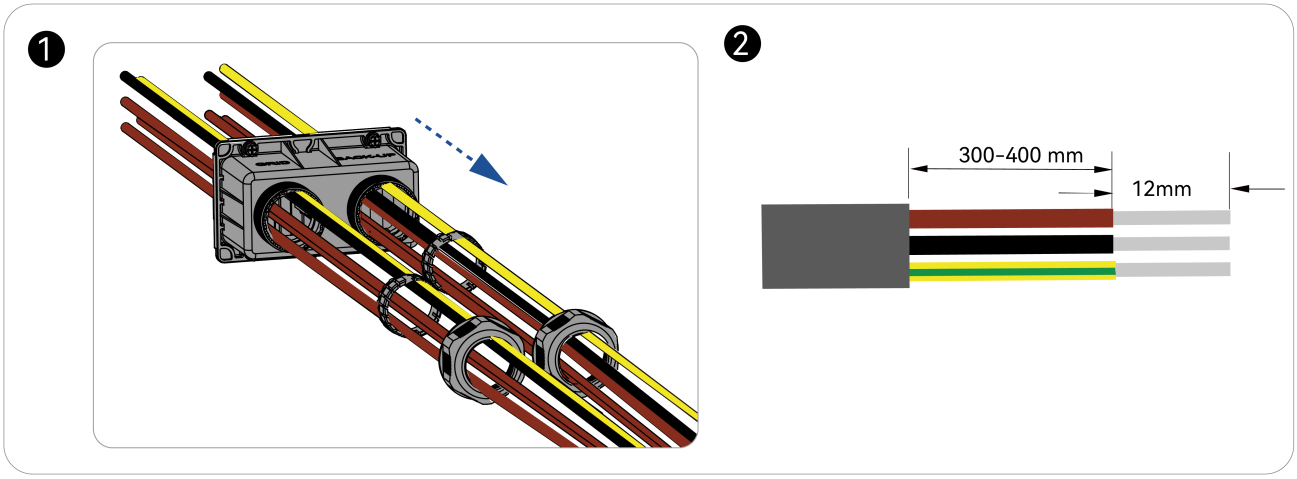

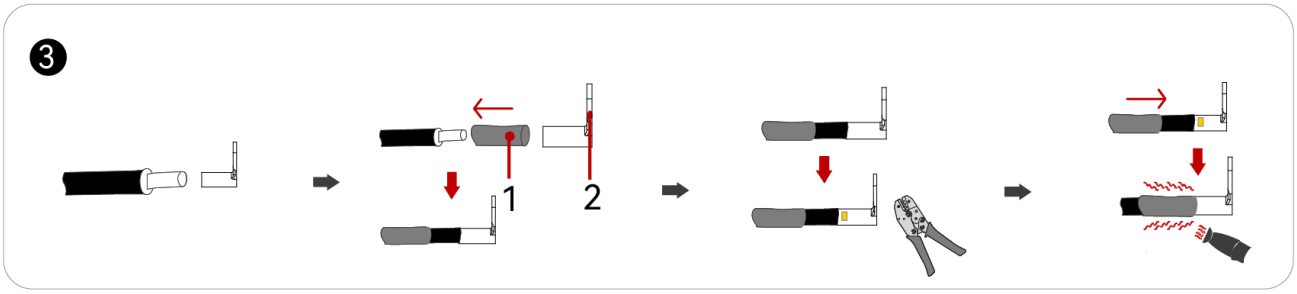

Note:

Use cold-pressed terminal crimping plier to crimp the AC cables.

4

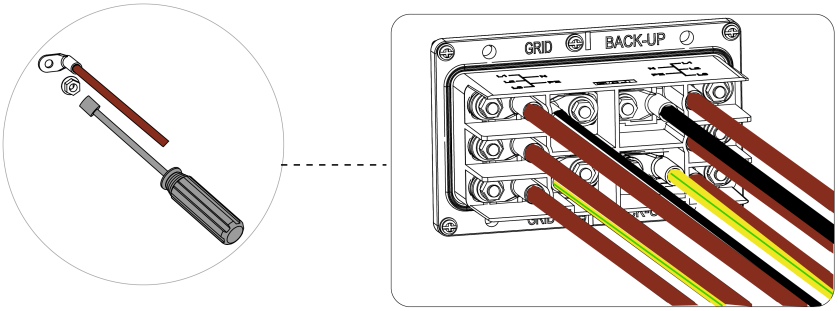

M5: 2-3 N·m

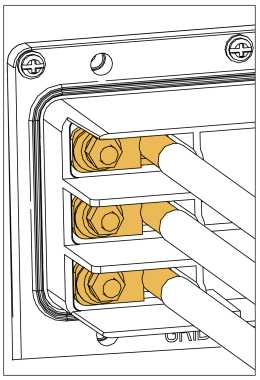

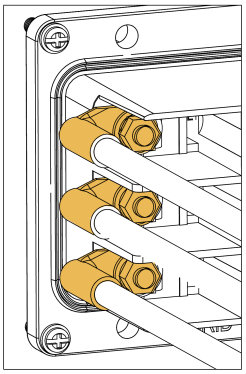

5

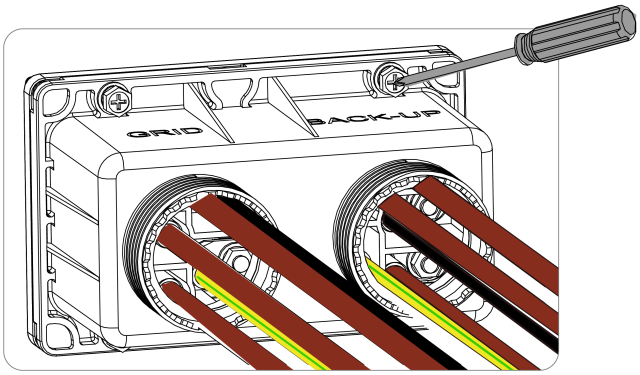

M5: 2-3 N·m

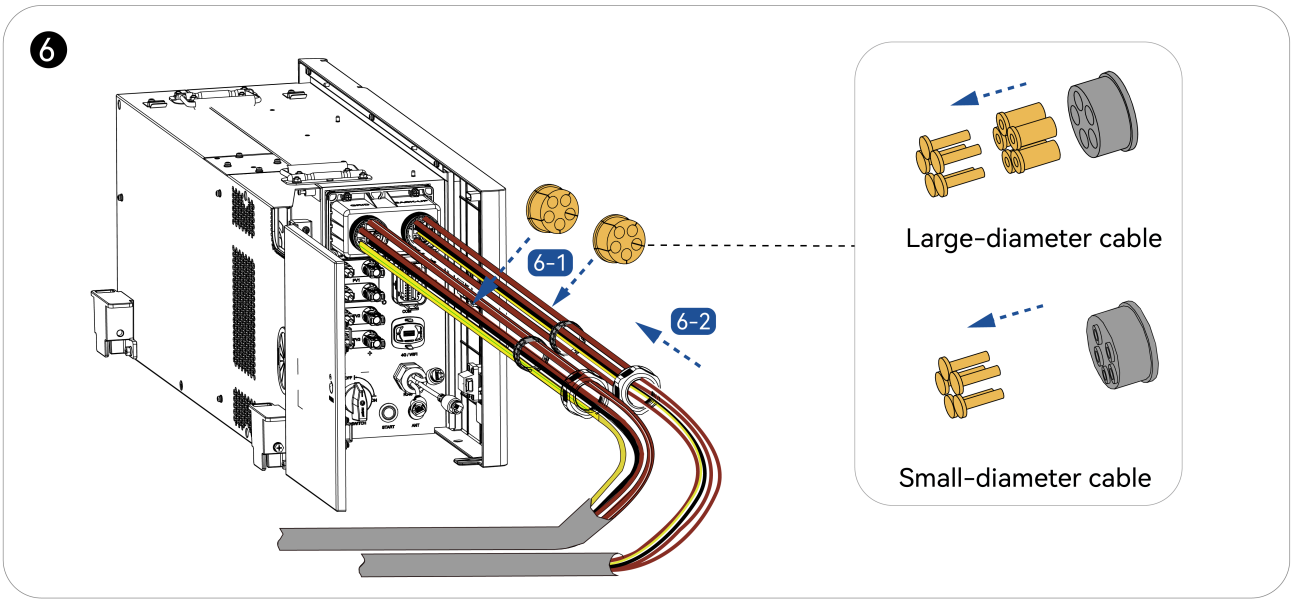

Rubber type	Cross-sectional area range of cable (mm^2)
Large-diameter rubber	10-16
Small-diameter rubber	4-6

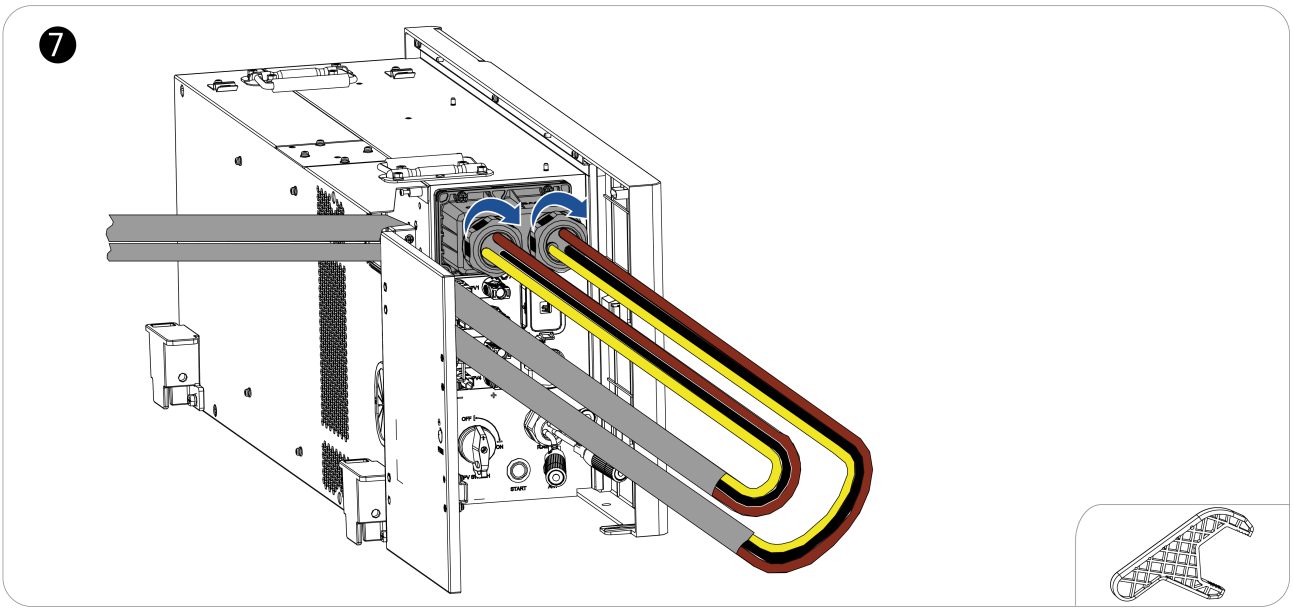

5.6. Connect the manual transfer switch (option A)

NOTICE

- The illustrations are provided for reference only. The component appearance is subject to the actual product you have received.
- The manual transfer switch may vary depending on the shipments. If the product received differs from the one in the printed document, see the latest electronic User Manual or Quick Guide.

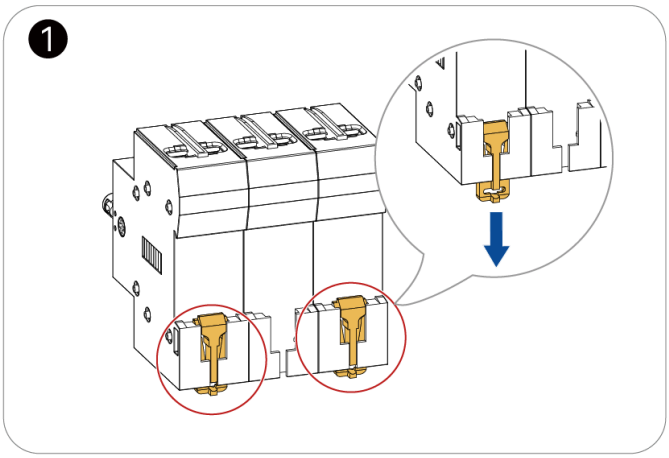

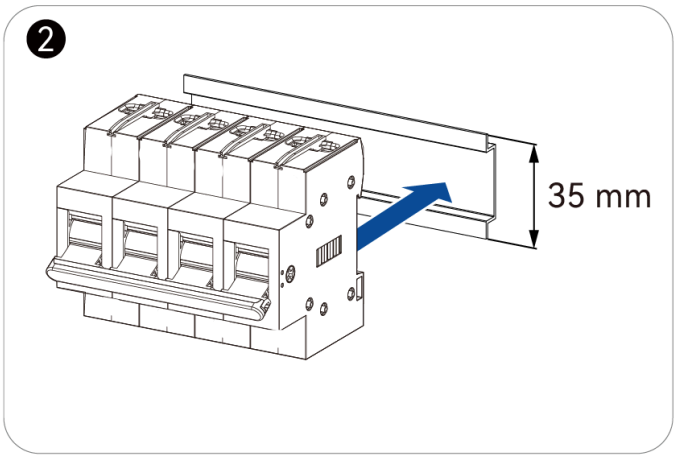

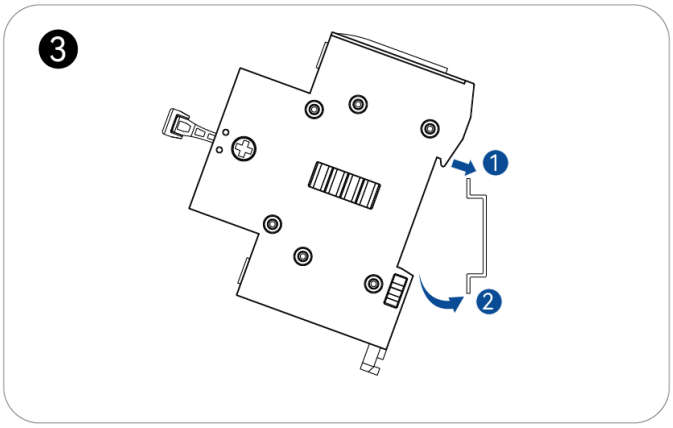

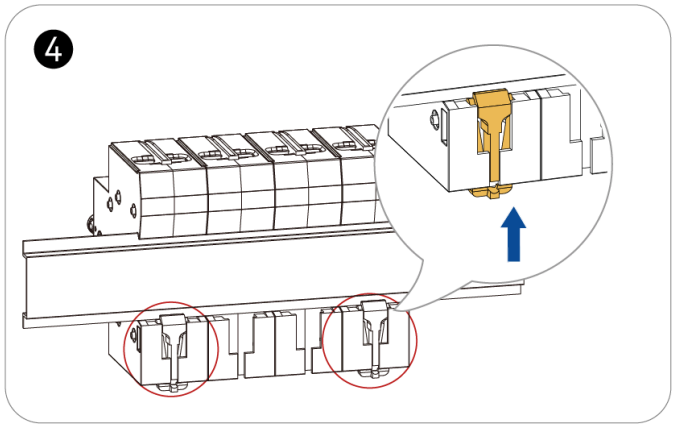

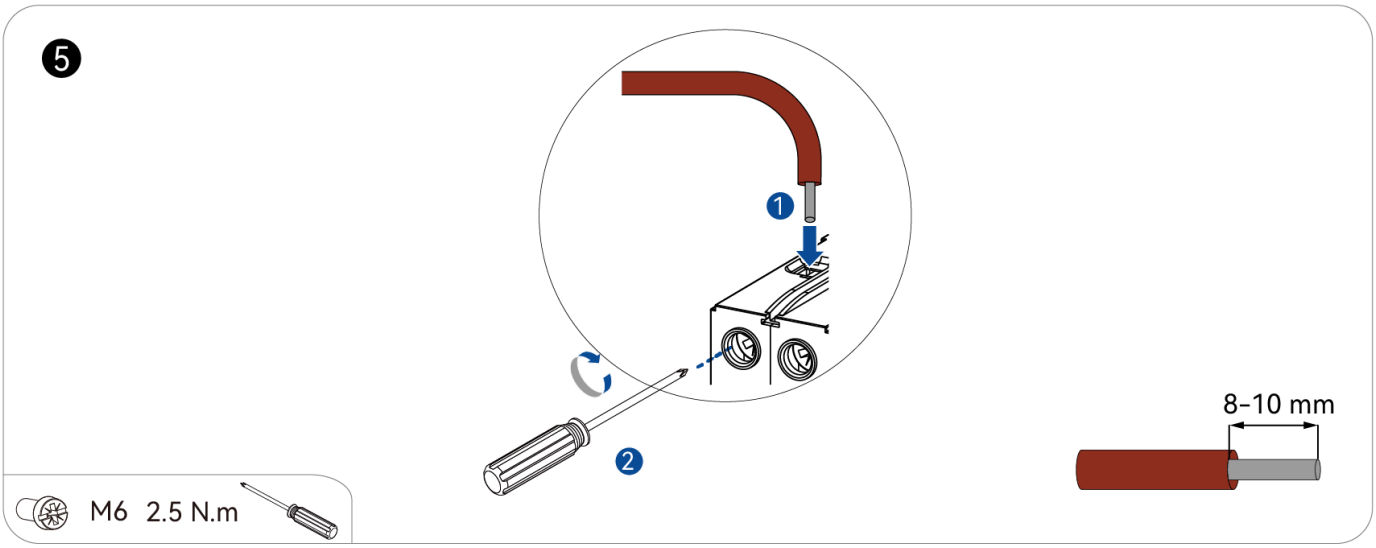

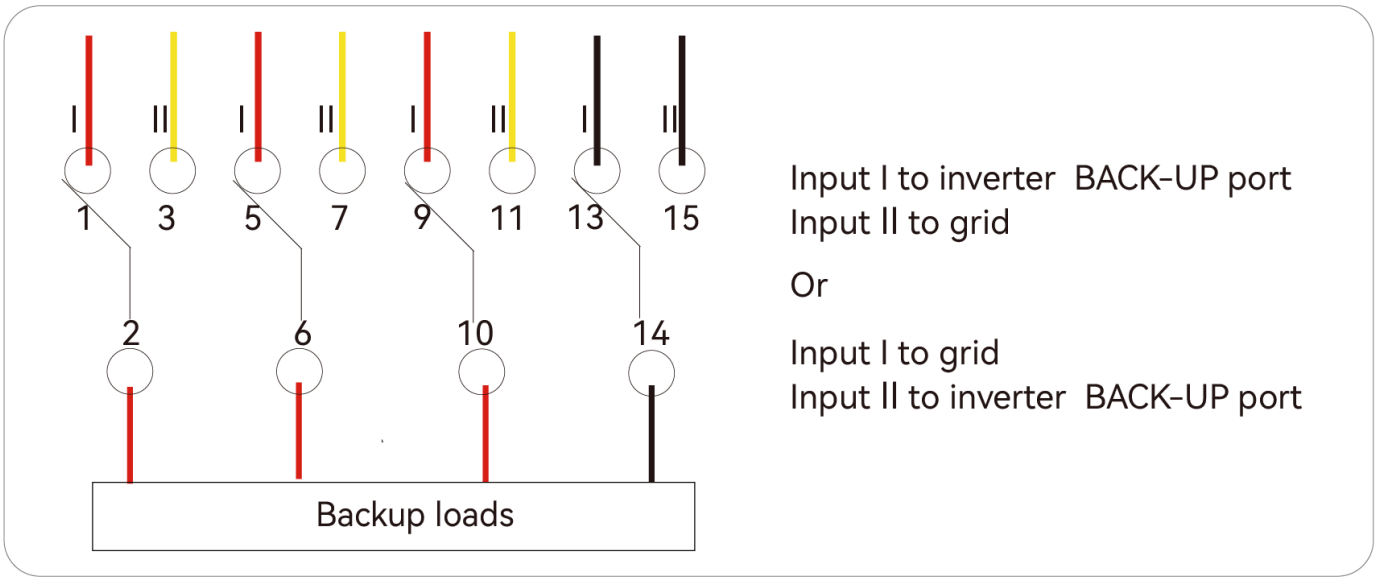

Terminal Group	Terminal No.	Description
Input I	1, 5, 9, 13	The 1st power input. Connect to the inverter BACK-UP port or the grid.
Input II	3, 7, 11, 15	The 2nd power input. Connect to the inverter BACK-UP port or the grid.
/	2, 6, 10, 14	Connect to the backup loads.

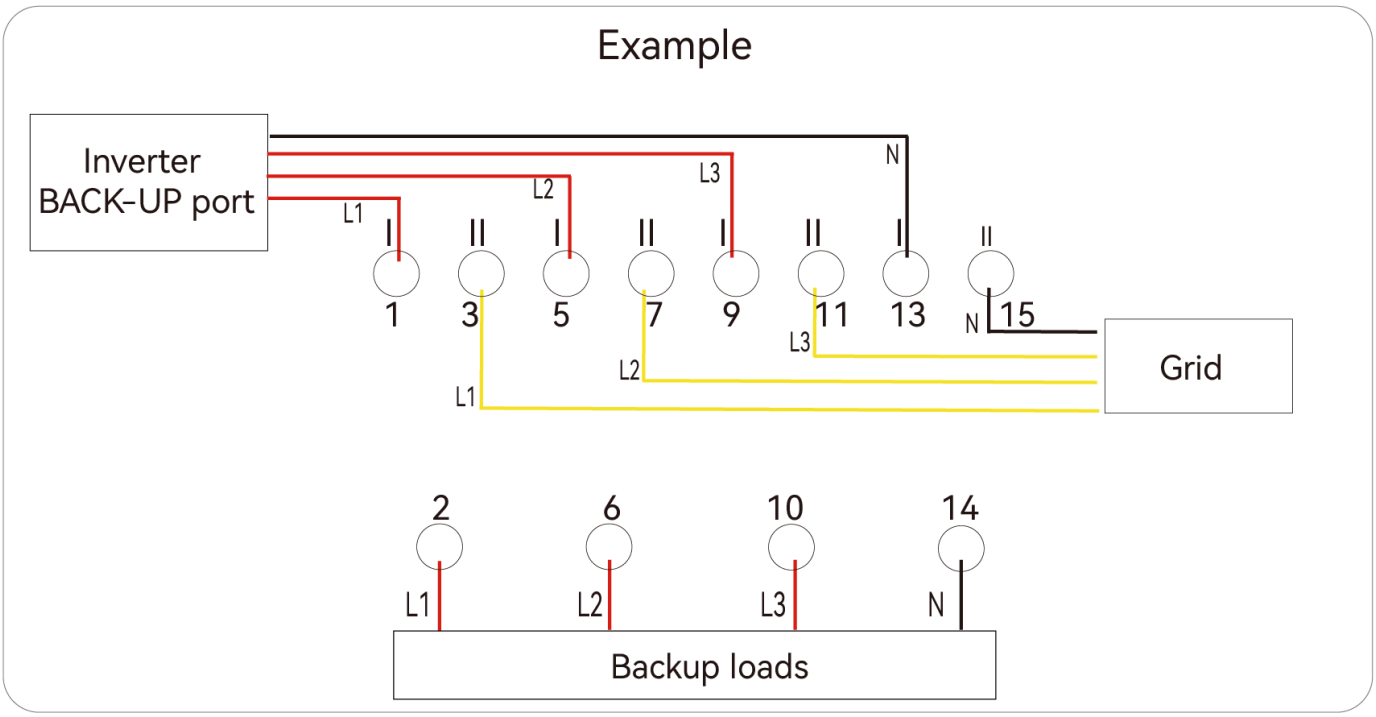
Example
Inverter
BACK-UP port
L1
L2
L3
N
I
II
1
3
5
7
9
11
13
15
Grid
2
6
10
14
Backup loads

5.7. Connect the manual transfer switch (option B)

NOTICE

- The illustrations are provided for reference only. The component appearance is subject to the actual product you have received.
- The manual transfer switch may vary depending on the shipments. If the product received differs from the one in the printed document, see the latest electronic User Manual or Quick Guide.

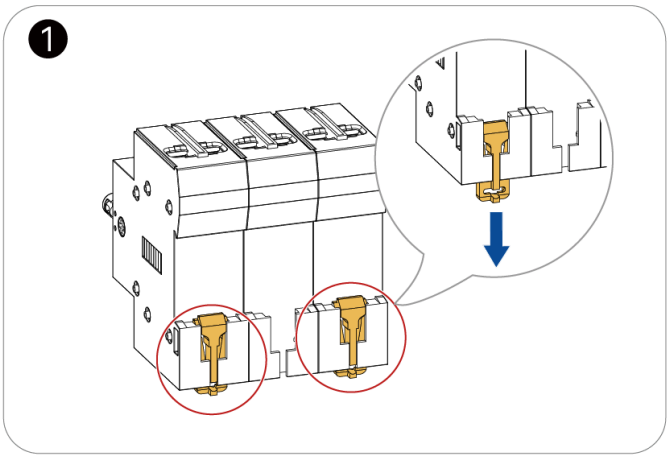

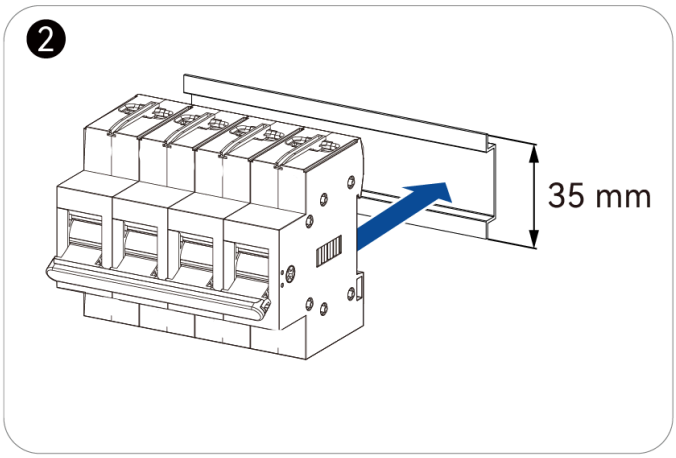

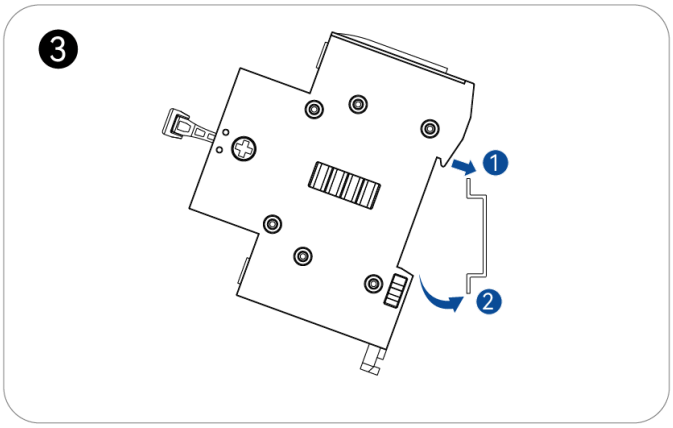

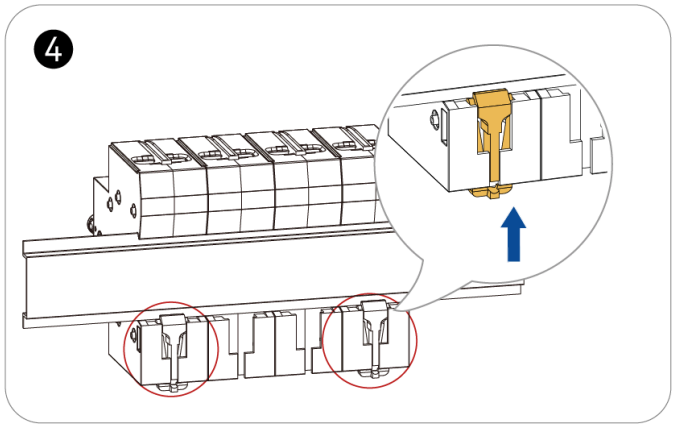

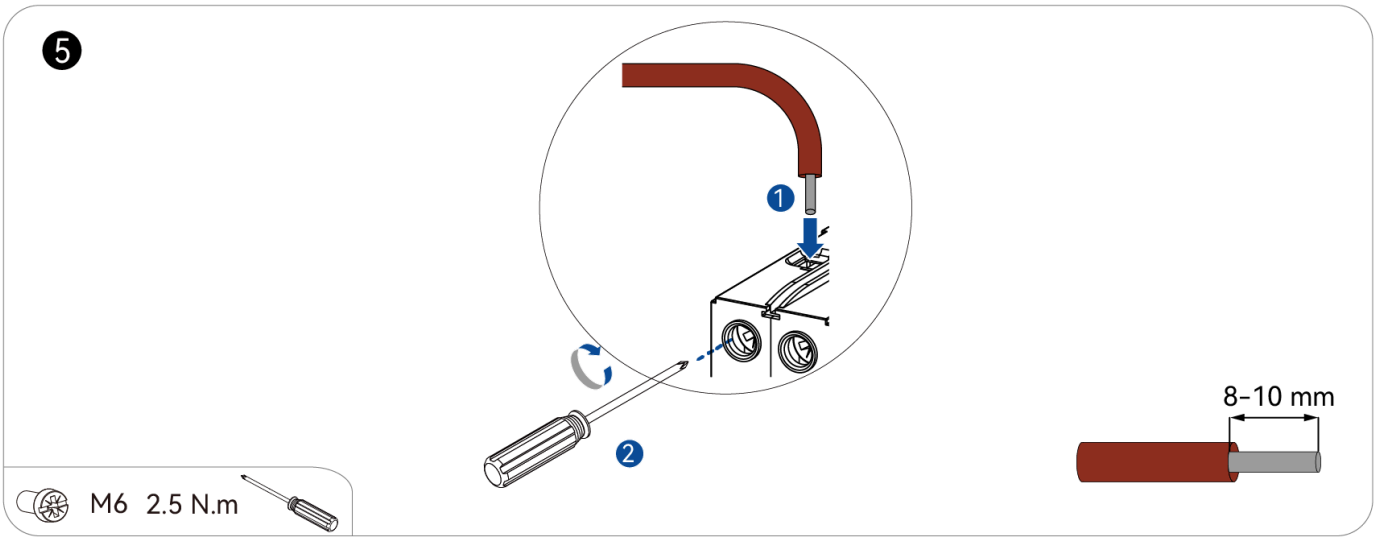

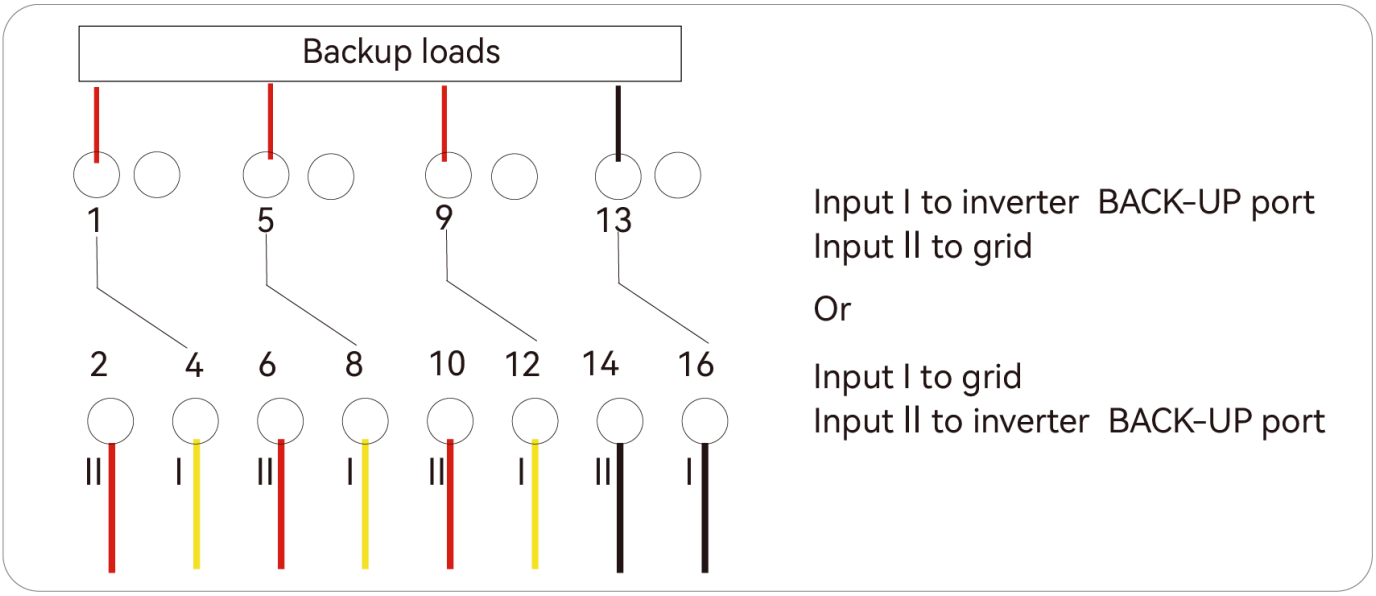

Terminal Group	Terminal No.	Description
Input I	4, 8, 12, 16	The 1st power input. Connect to the inverter BACK-UP port or the grid.
Input II	2, 6, 10, 14	The 2nd power input. Connect to the inverter BACK-UP port or the grid.
/	1, 5, 9, 13	Connect to the backup loads.

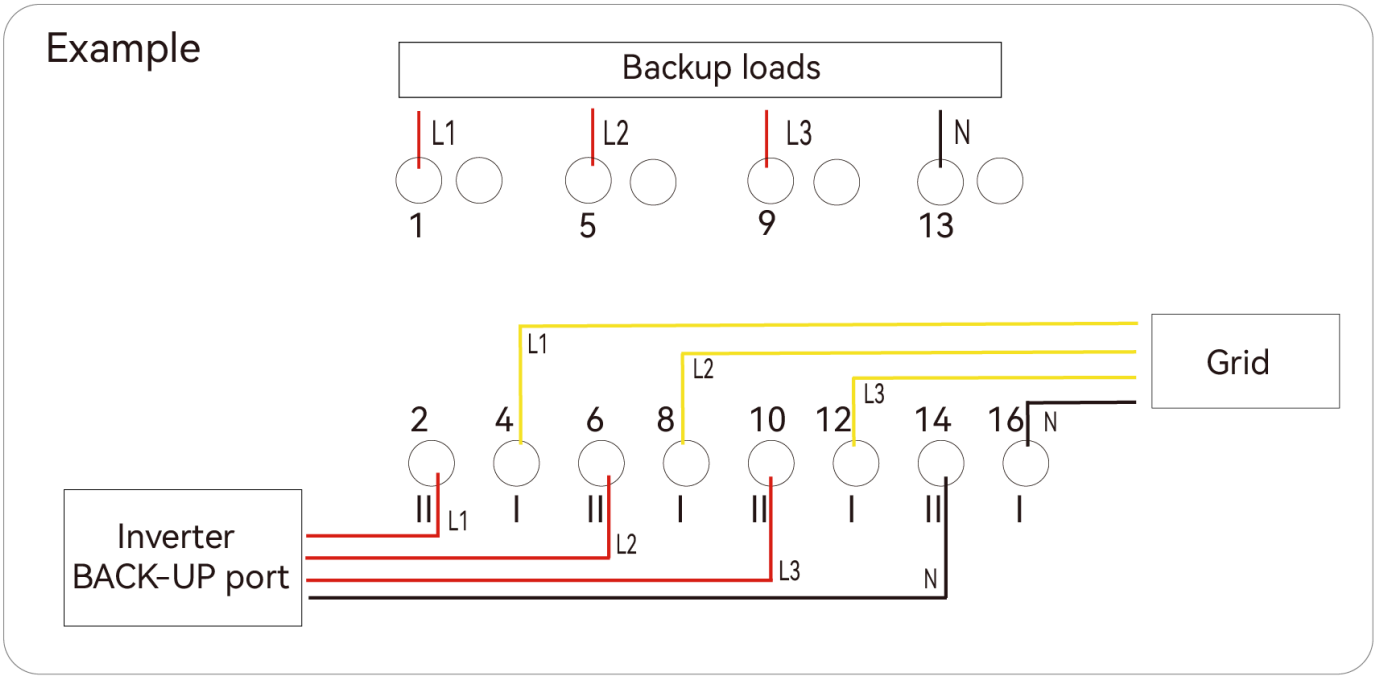
Example
Backup loads
L1
L2
L3
N
1
5
9
13
Grid
L1
L2
L3
N
2
4
6
8
10
12
14
16
Inverter
BACK-UP port
L1
L2
L3
N

5.8. Connect the DC power cables

Note: Depending on different models, some ports may be disabled with plugs. Only connect the cables to the available ports.

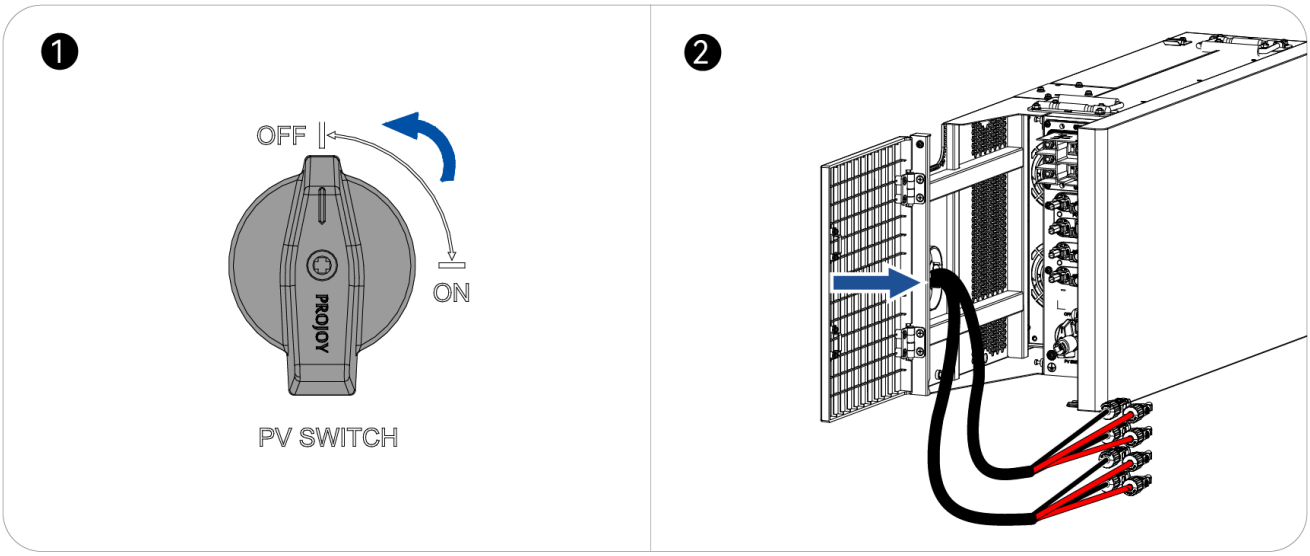

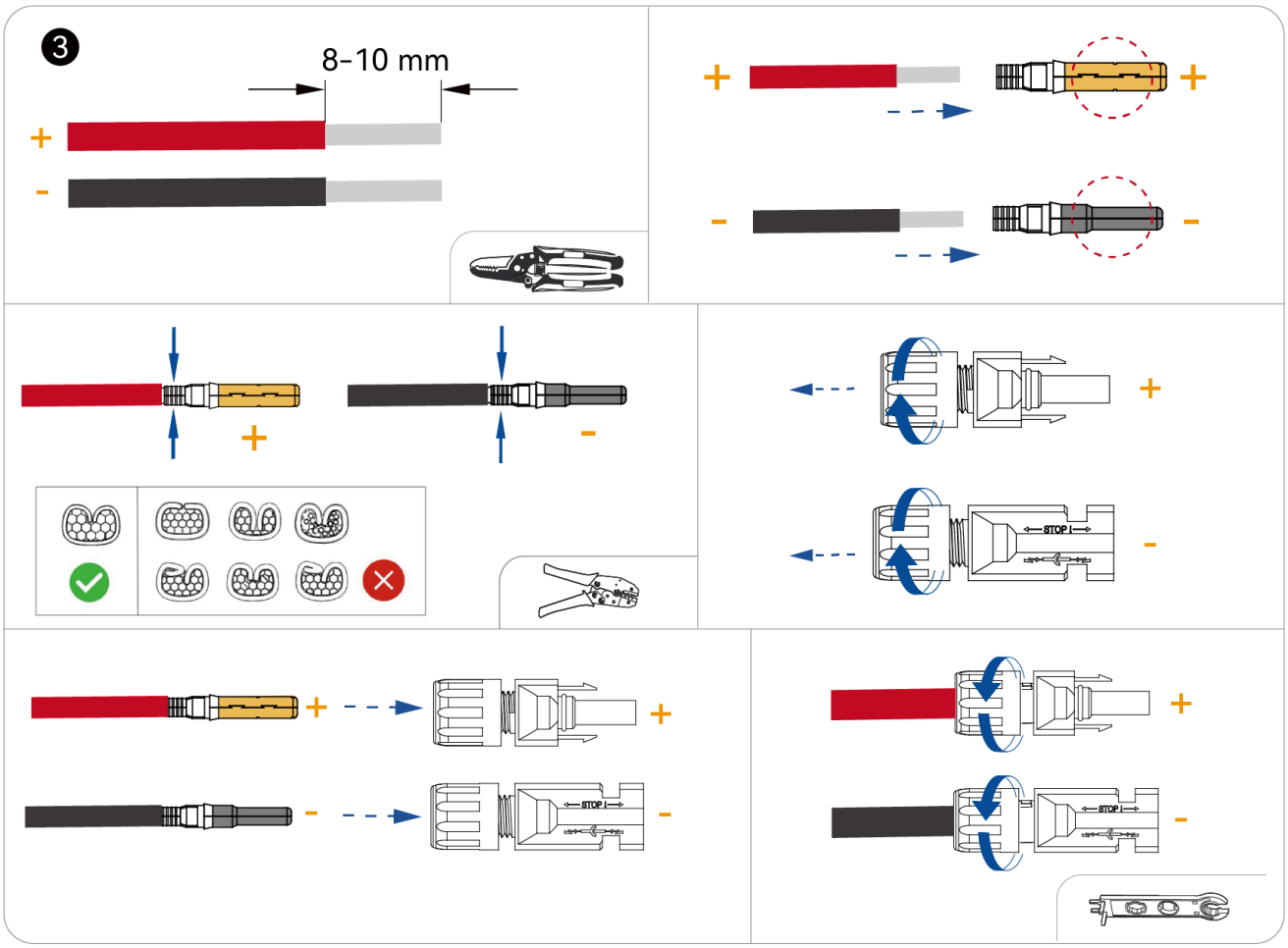

4

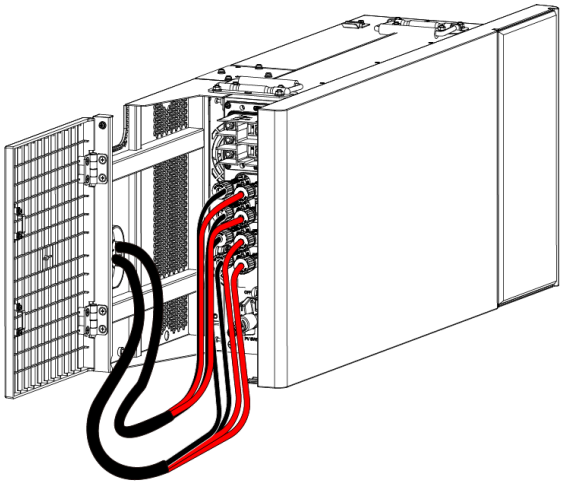

5.9. Connect the communication cables to COM port

NOTICE

Even if no cables are connected, the communication connector must be installed onto the **COM** port. Otherwise, an internal communication loss alarm will be triggered.

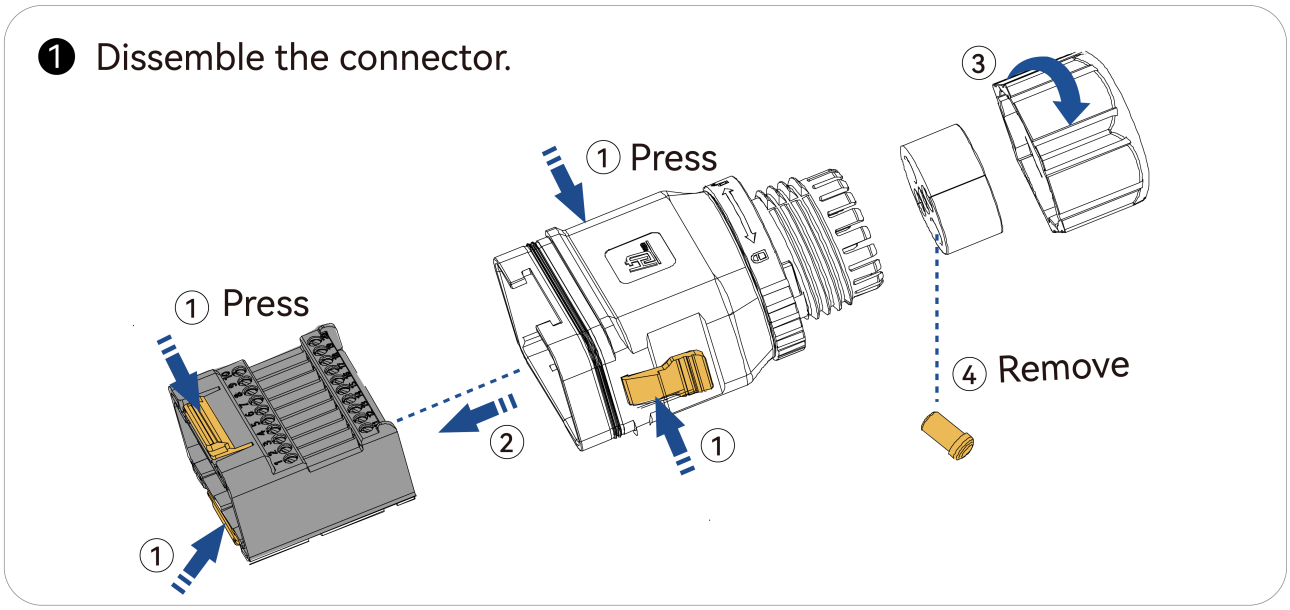

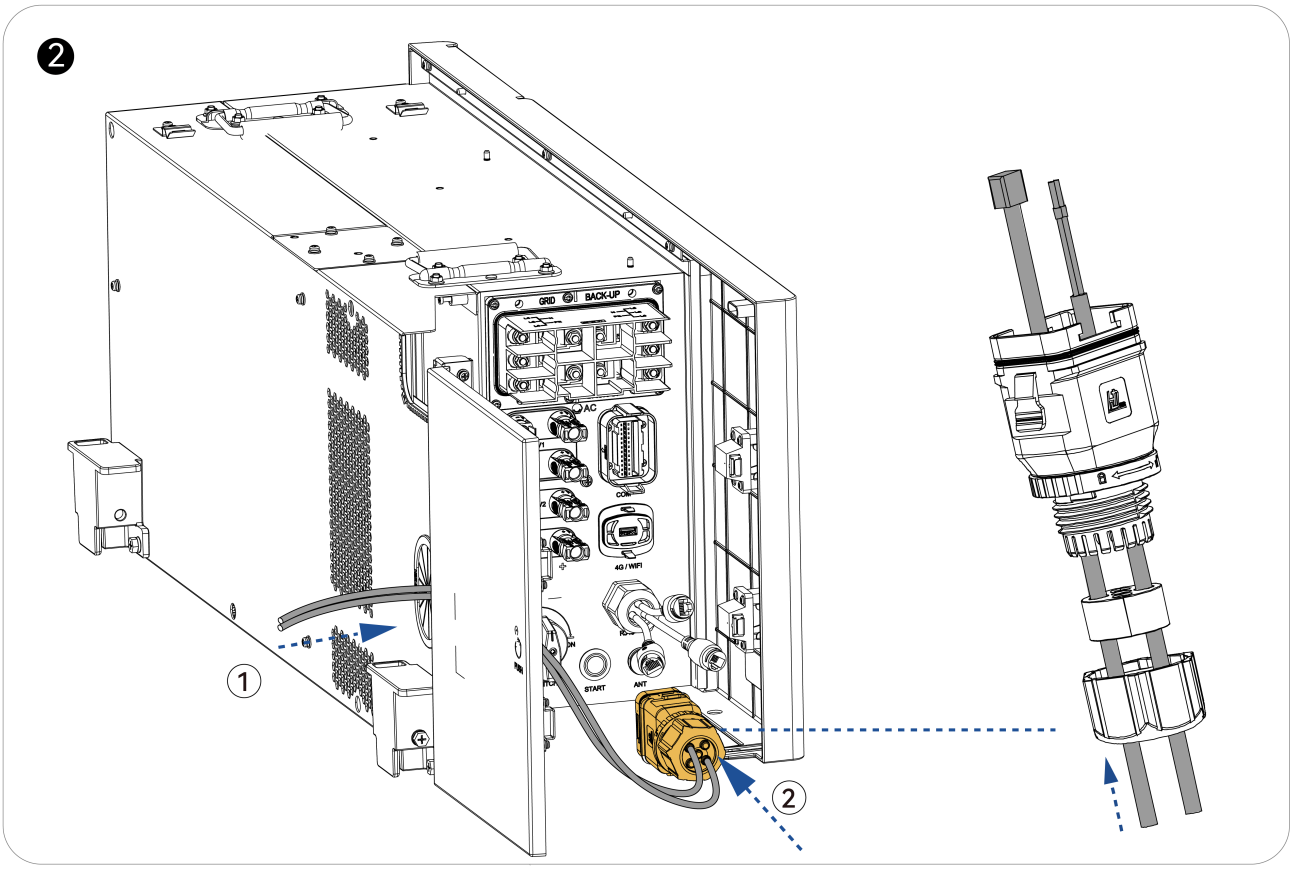

Step 3: Connect and secure the cables to the corresponding terminals based on your needs.

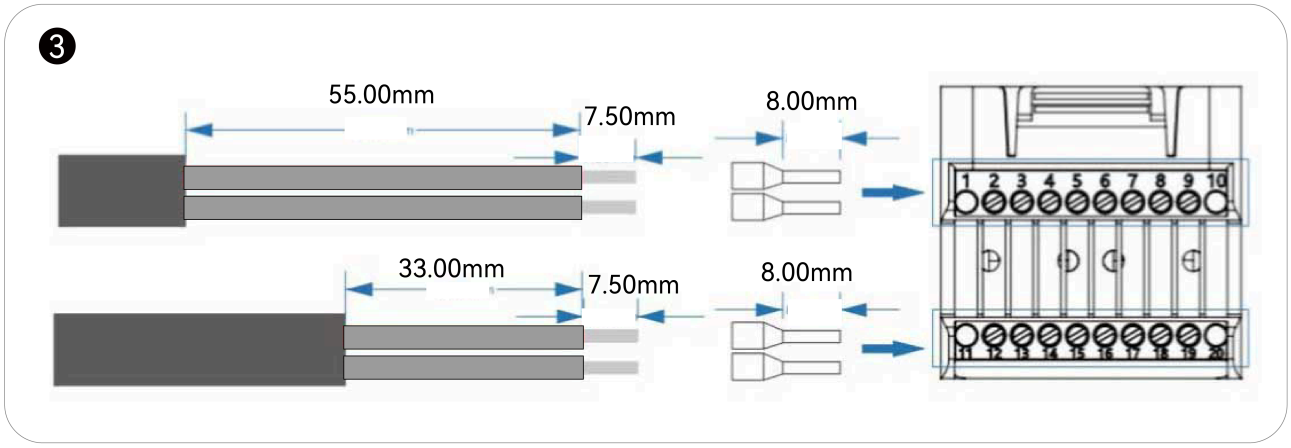

(Optional) Step 4: This step is only required for wired communication between inverter and meter. Connect the cables to terminals **13** (RS485 A) and **14** (RS485 B).

Note:

- The inverter is wirelessly pre-paired with the meter at the factory. For wireless communication, no wiring is required at the communication connector. Skip this step and install the antennas instead.
- For any terminal equipped with a 120 Ω resistor, such as METER-A, switch the resistor to **ON** if the cable exceeds 20 meters.

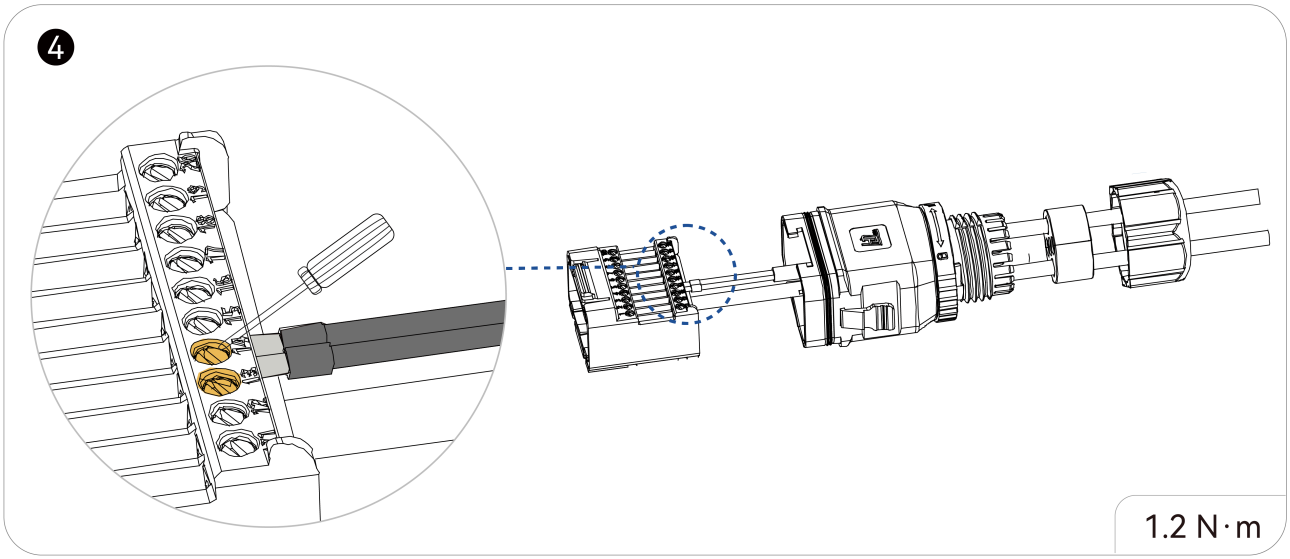

❺

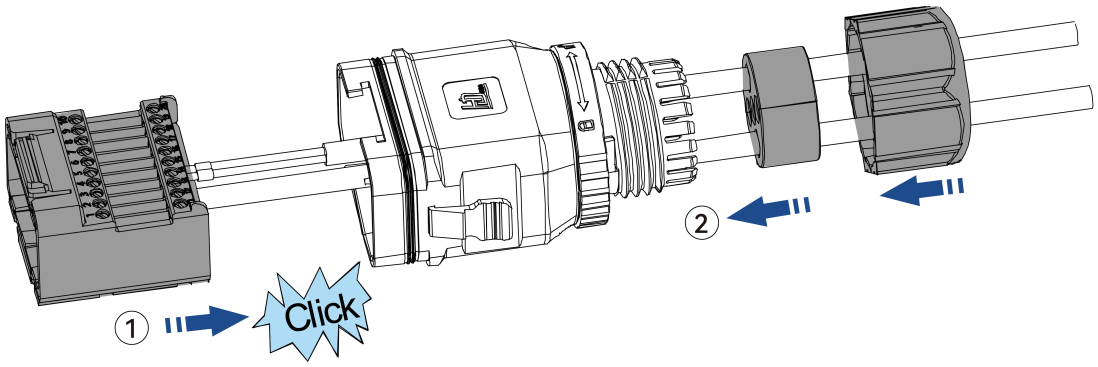

❻

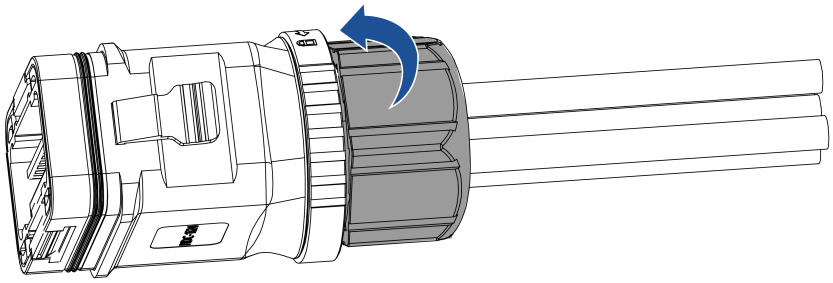

2.5 N·m

❼

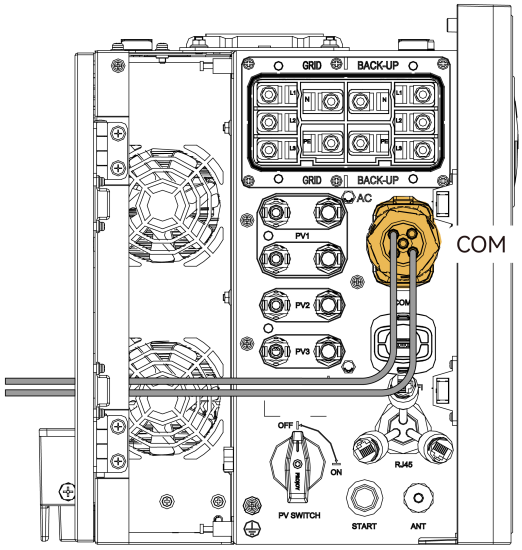

Step 8: Connect the other end of the cables to external devices, such as the meter.

Note: The inverter is wirelessly pre-paired with the meter at the factory. For wireless communication, no wiring is required at the communication connector. Skip this step and install the antennas instead.

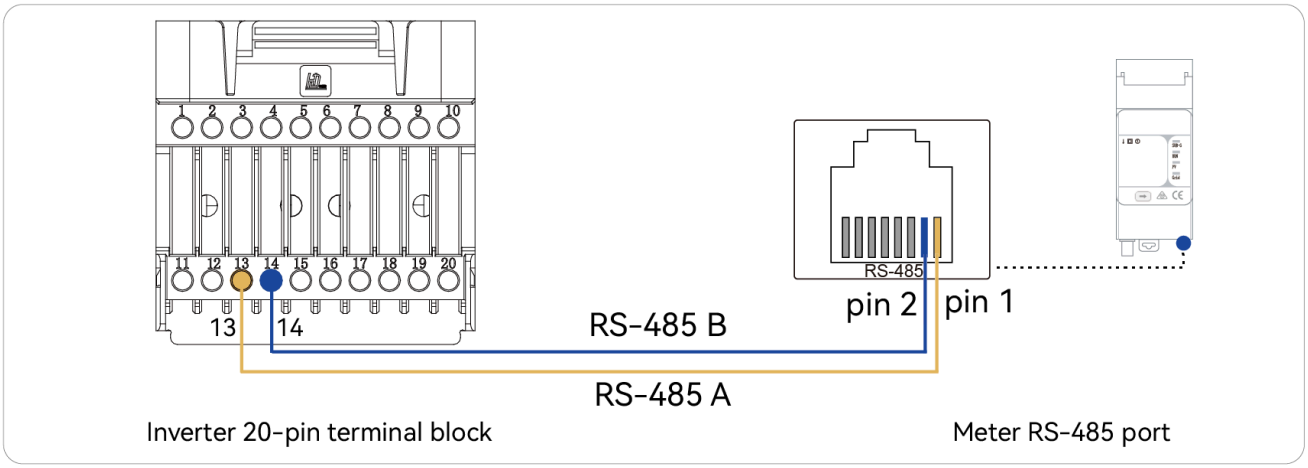
1 2 3 4 5 6 7 8 9 10
11 12 13 14 15 16 17 18 19 20
13
14
RS-485 B
RS-485
pin 2
pin 1
RS-485 A
Inverter 20-pin terminal block
Meter RS-485 port

5.10. Connect the communication module

eSolar AIO3 Pro module (Ethernet)

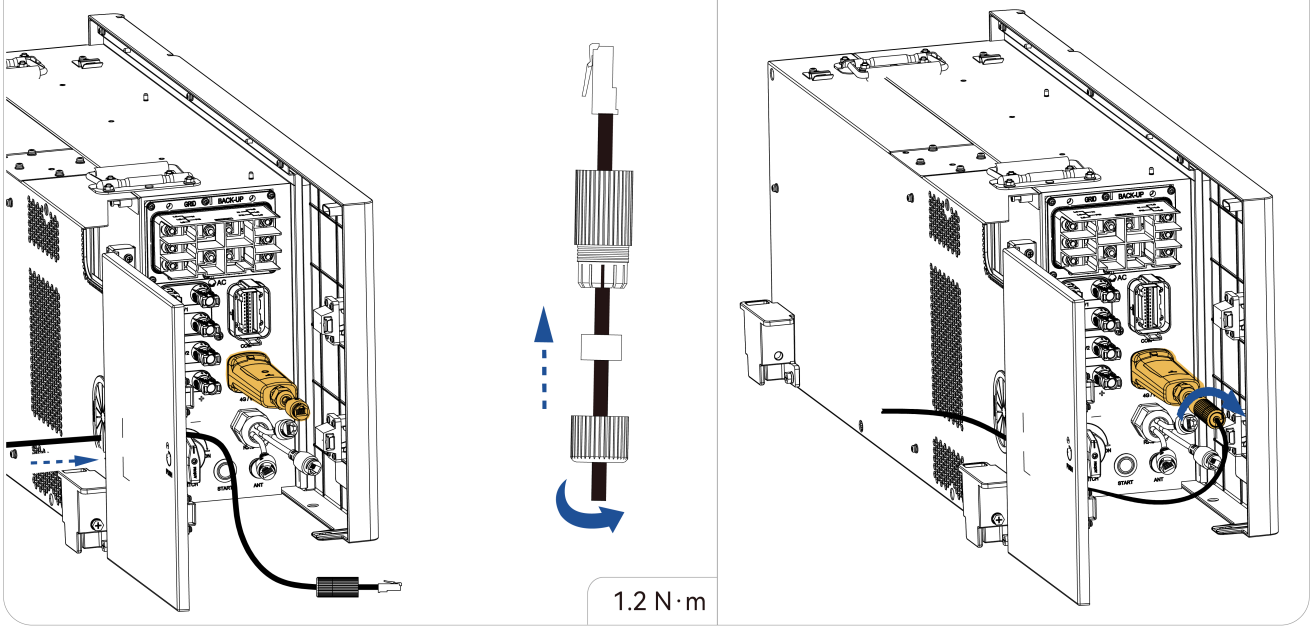

eSolar AIO3 Pro module (Wi-Fi)

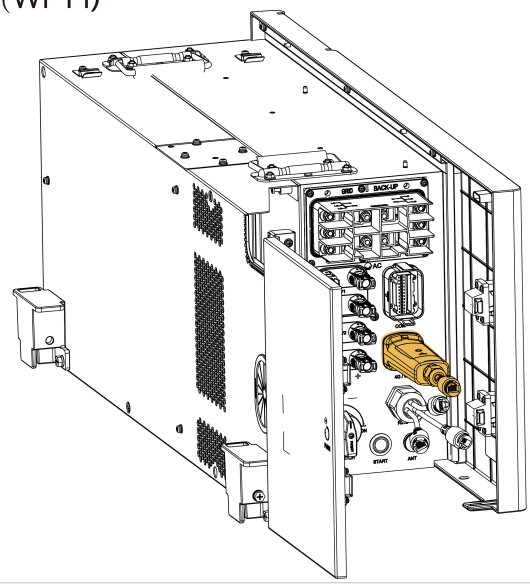

5.11. Connect the LAN and DRMS cables

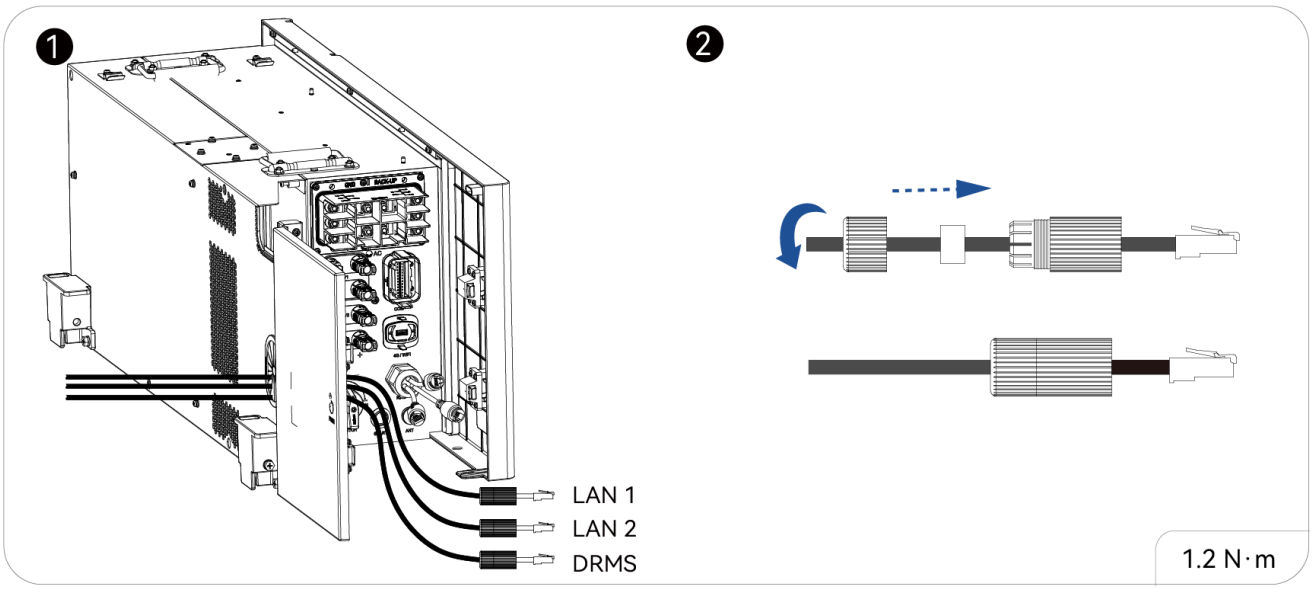

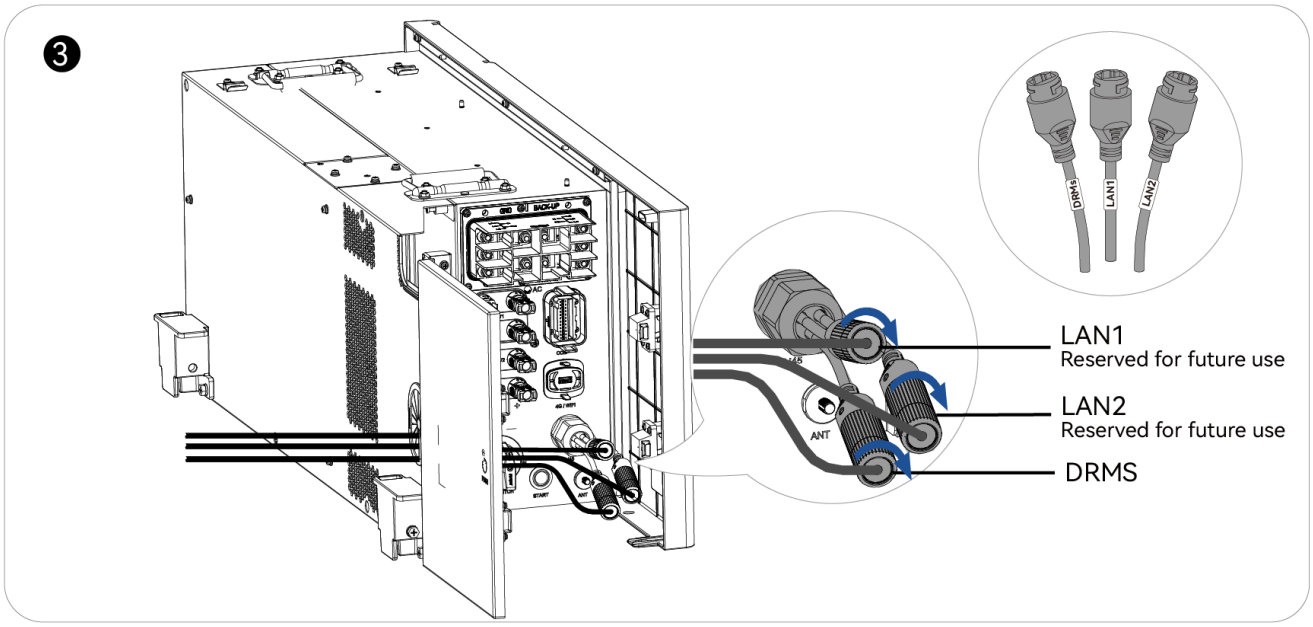

5.12. Connect the antenna

This procedure provides the instructions for installing the antennas used to establish wireless communication between the inverter and the meter.

NOTICE

- If the RS-485 wired communication is used, skip this step.
- For better signal reception, mount the antenna on top of the inverter and outside the distribution box where the meter is installed. Otherwise, signal loss may occur.
- With the antennas installed, the inverter is pre-paired wireless with the meter included in delivery. If you want to replace or add a meter, pair the meter and inverter through elekeeper app as instructed in the digital User Manual.

1. Connect the antenna on the inverter.

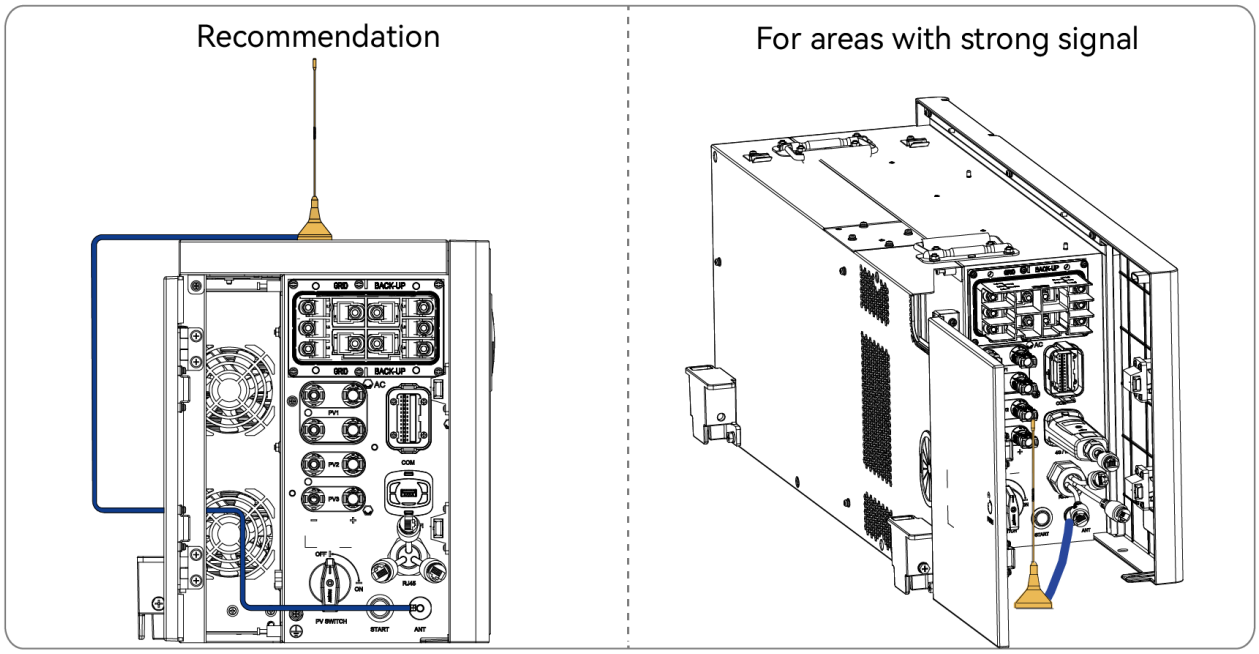

2. Connect the antenna on the meter.

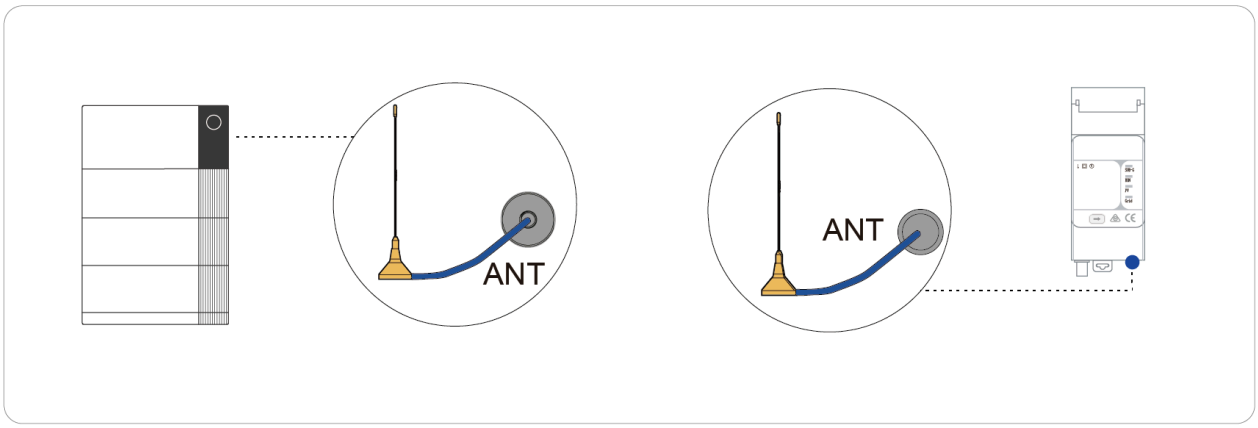

5.13. Install the inverter cover

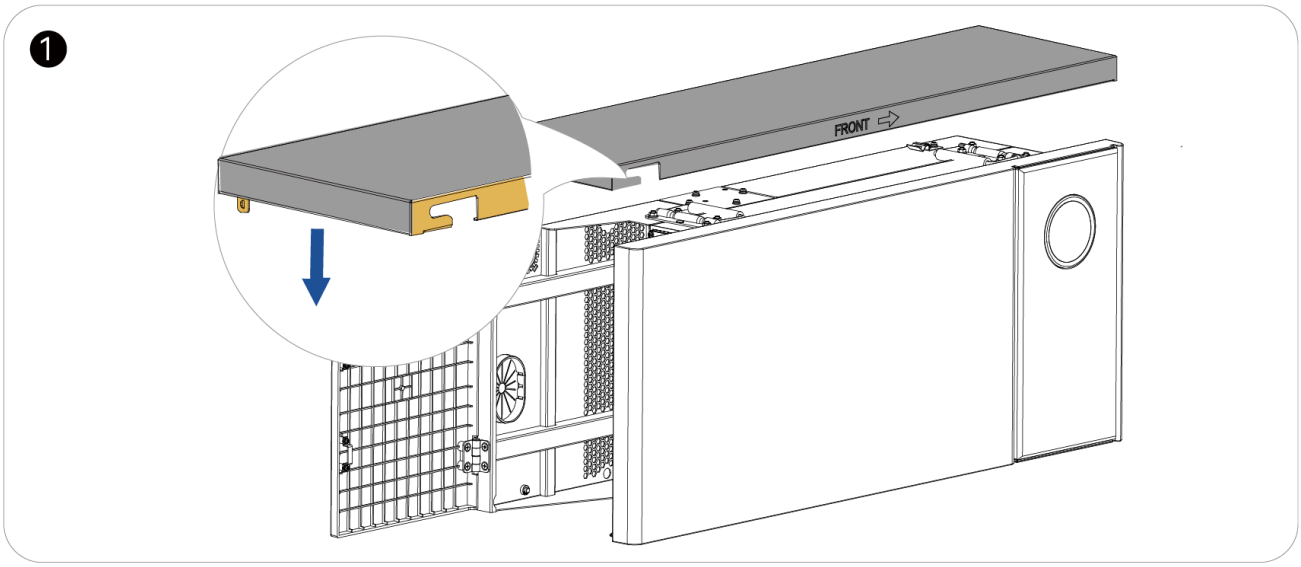

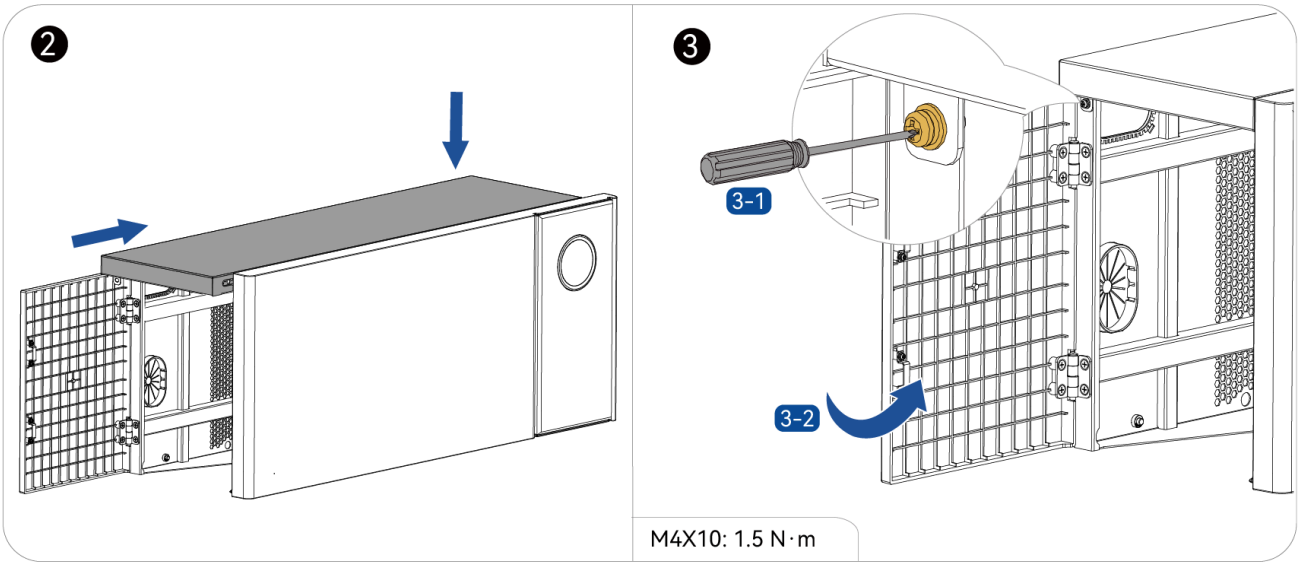

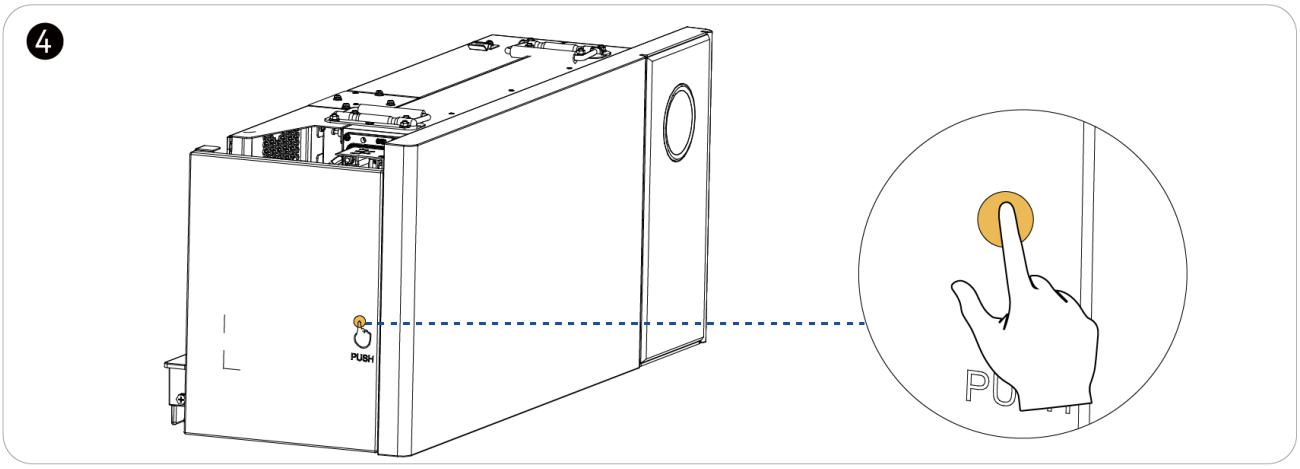

6. Start up the system

Before you begin

Verify that all the electrical connections are properly wired and secured before starting up the system.

- **Method 1 for starting up the system**

1. Open the AC distribution box, turn on the following circuit breakers in sequence.
   a. The backup loads
   b. The grid

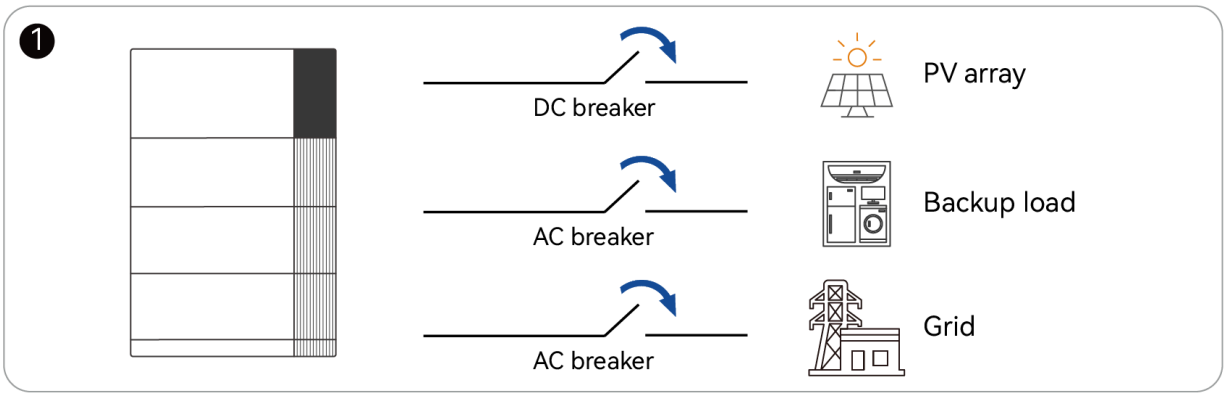

2. On the inverter, turn on the **PV SWITCH** to enable the connection to the PV arrays.
3. Check the LED indicator status on the inverter panel to ensure that the inverter is running properly.

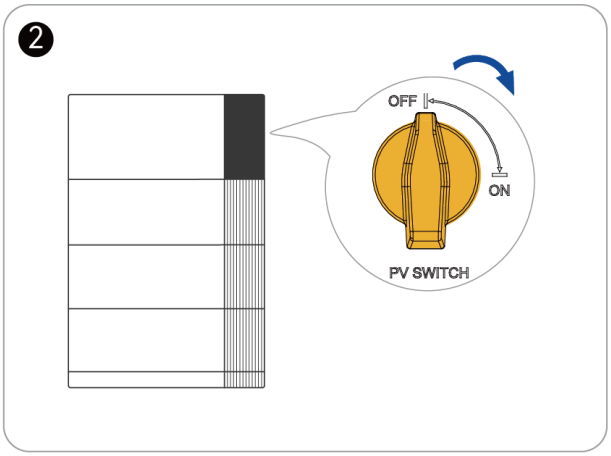

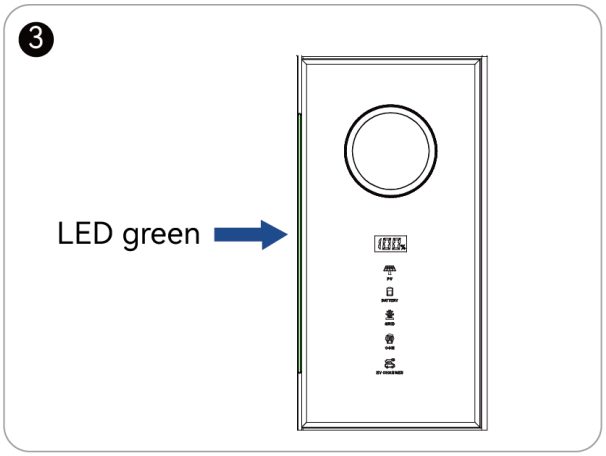

4. Download the elekeeper App and perform the system commissioning.

- **Method 2 for starting up the system**

1. On the left side of the inverter, press and hold the **START** button for 5 seconds until the LED indicator on the front panel is on.

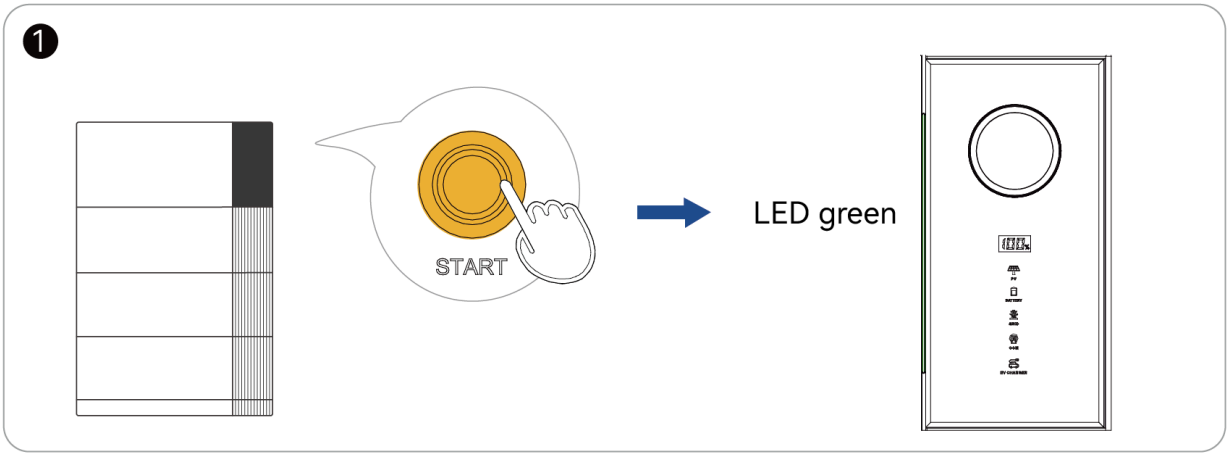

2. On the inverter, turn on the **PV SWITCH** to enable the connection to the PV arrays.

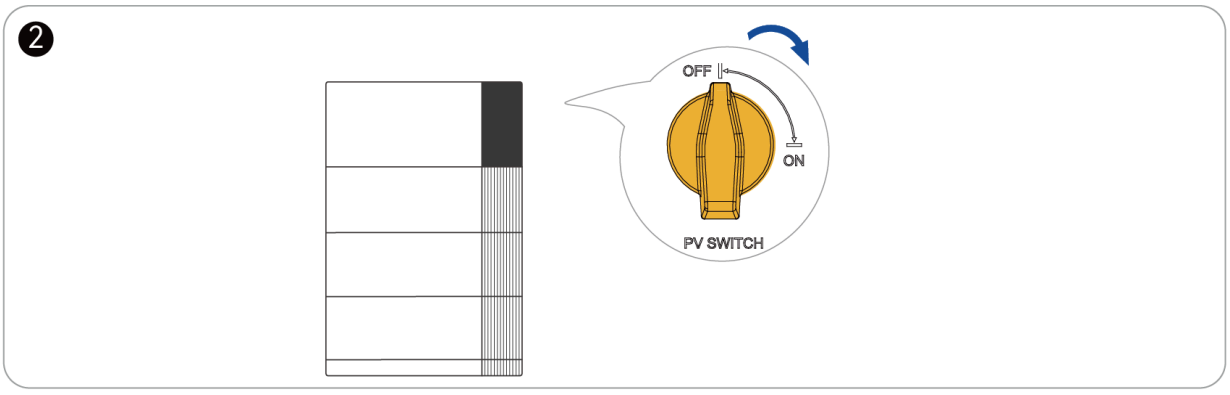

3. Open the AC distribution box, turn on the following circuit breakers in sequence.
   a. The backup loads
   b. The grid

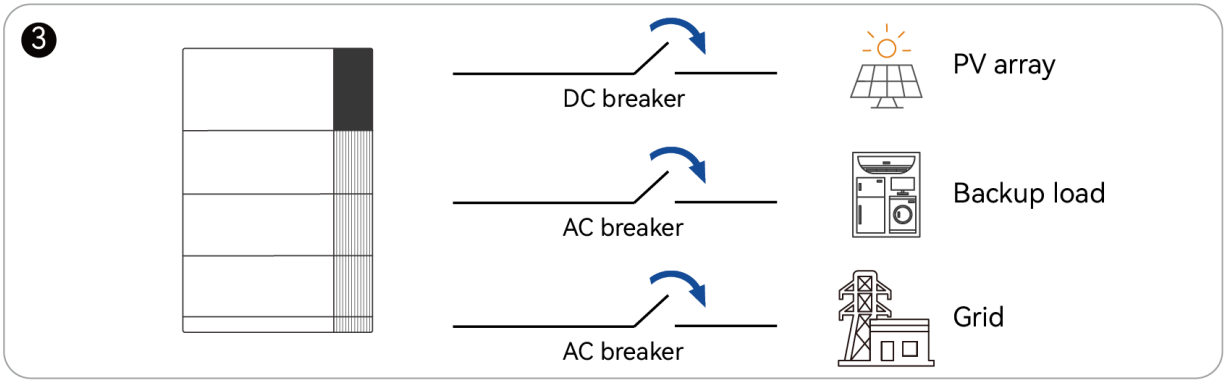

4. Download and elekeeper App and perform the system commissioning.

7. Shut down the system

1. Open the AC distribution box, turn off the following circuit breakers:
   a. The backup loads
   b. The grid

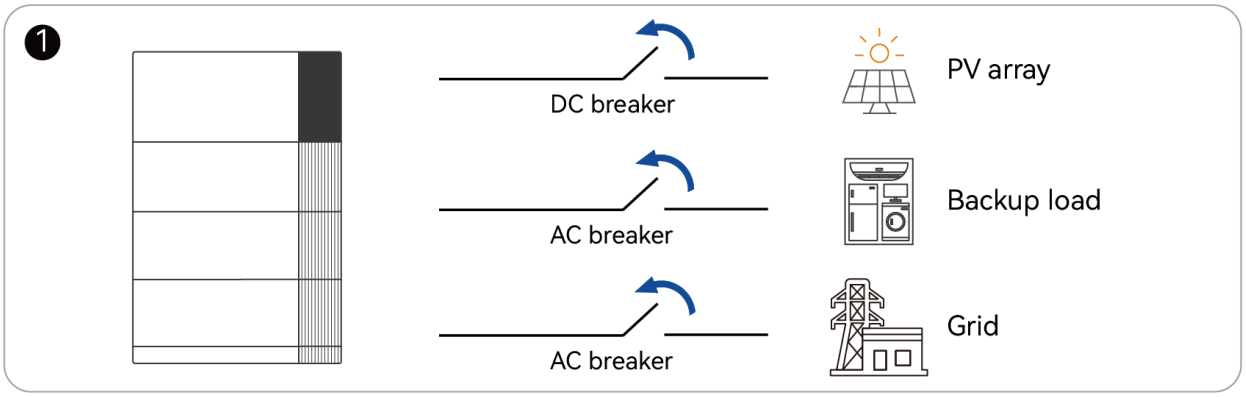

2. On the left side of the inverter, turn off the DC switch to disconnect from the PV arrays.

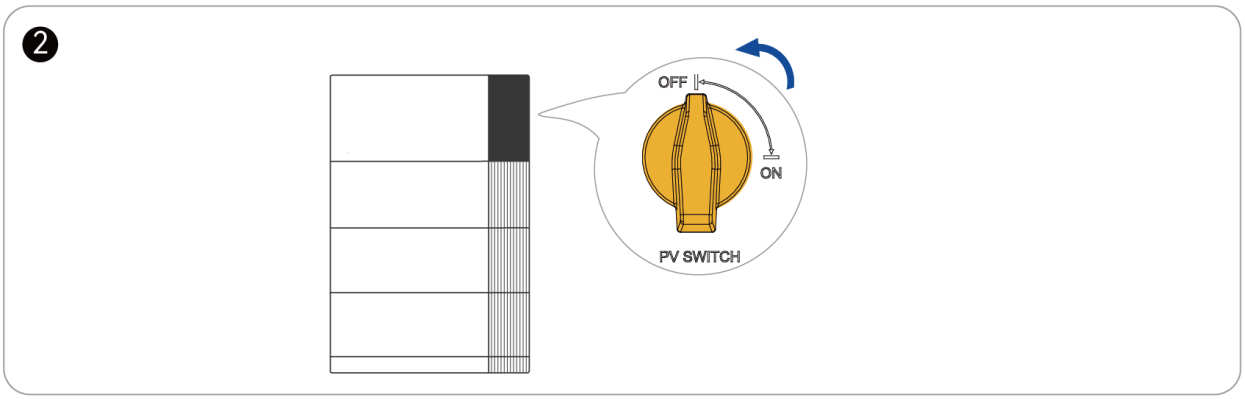

3. On the inverter, press and hold the **START** button for 5 seconds, and then release the button. Wait until both the button backlight and the LED indicator turn off.

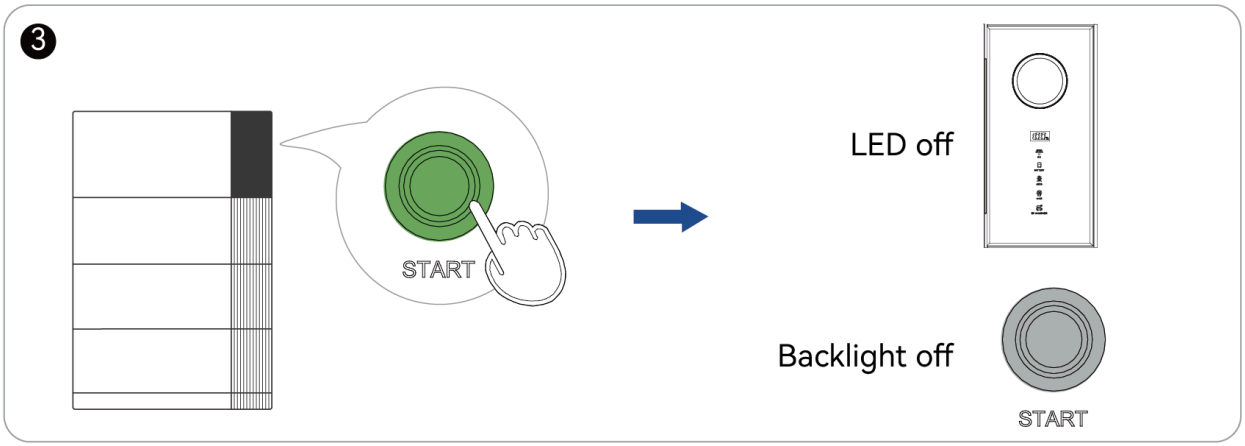

Note: Once the system is shut down, there is no voltage output at the positive and negative terminals. Do not forcibly activate the system to output voltage by other means.

8. Commissioning on App

8.1. Download and log in to the elekeeper App

8.1.1. About elekeeper

The SAJ elekeeper Application Version 5.0 is an easy-to-use, AI-powered energy management platform designed for homeowners and businesses with full ecosystem autonomous AI control. It gives the Owner full control over their energy - from generation and storage to consumption and selling - through a single App that works on phones, tablets, and computers. The platform provides the following AI-powered modules:

- **AI Care**: provides six-dimensional system diagnosis and 24/7 system protection.
- **AI Saving**: provides AI-powered working strategy adaptation for various scenarios to maximize user revenue.
- **AI Keeper**: provides intelligent functions including full voice autonomous control, user intent recognition, , electricity data analysis, and autonomous task planning.

8.1.2. Download the elekeeper App

Search for "elekeeper" in the App store and download the App.

Alternatively, scan the below QR code to download the App.

8.1.3. Sign up at the elekeeper App

The end user, installer, or distributor can follow this procedure to sign up at the elekeeper App. The installer can also follow this procedure to create an account for the end user.

Note: Recommend activating the Location Services on the phone for optimum utilization of the functions.

1. Open the App and tap **Sign Up** on the login page.

2. Select the country of the installation site and the user role.

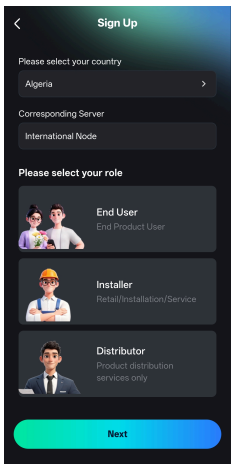

Parameter	Description
Corresponding Server	The server is set automatically depending on the selected country.
Please select your role	• **End User**: The owner of the power plant. Select this option when the installer is signing up for the end user. • **Installer**: The installation and retail service providers. • **Distributor**: The distribution service provider.

Table 8.1. Signup parameters

3. For the **End User** role, fill in the user information accordingly.

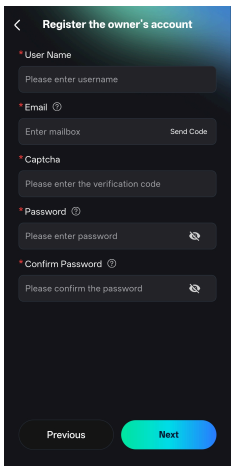

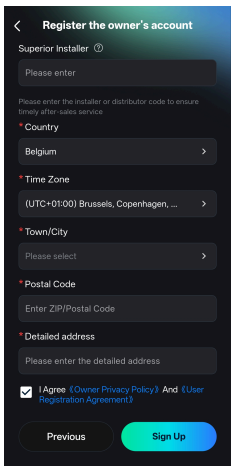

4. For the **Installer** role, either create a company or join an existing company to provide the information accordingly.

   To create a company:

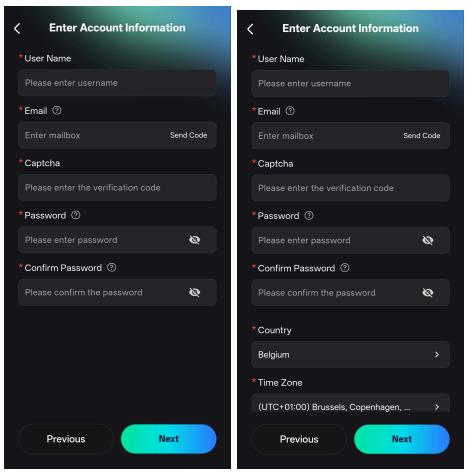

To join a company:

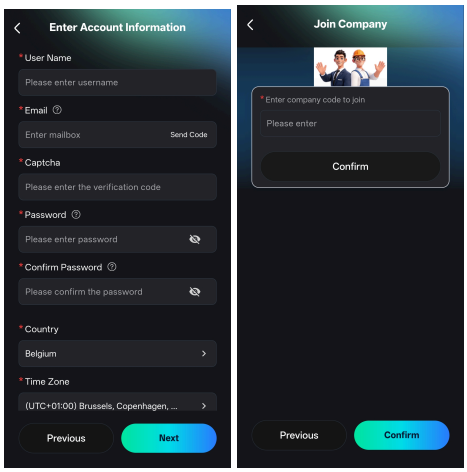

To check an existing user's company code, open page **My**:

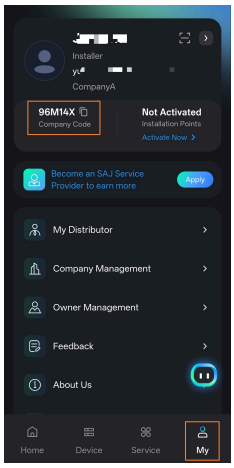

5. For the **Distributor** role, provide similar information as the **Installer** role.

8.1.4. Log in to the elekeeper App

1. Open the App and tap the globe icon on the top right corner.
2. Select the **Region** and **Language** depending on the installation site of the system.

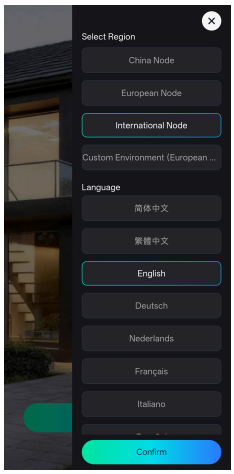

3. Log in with the username, phone number, or email.

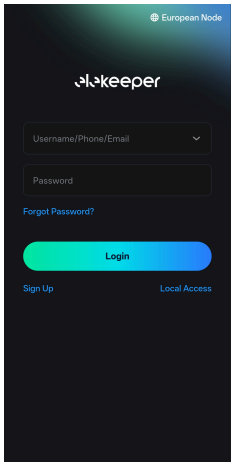

4. (Optional) If you forgot your password, reset your password with email verification.

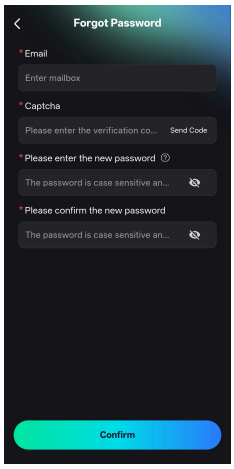

8.2. Initialization and installation diagnosis

8.2.1. Perform one-click initialization

1. On page **Service**, tap **Bluetooth**. Select the communication module, inverter or EMS according to the last five digits of the serial number (SN).
   Example:
   - **BlueLink: 45269** for a communication module or inverter.
   - **EMS: 00199** for EMS units.

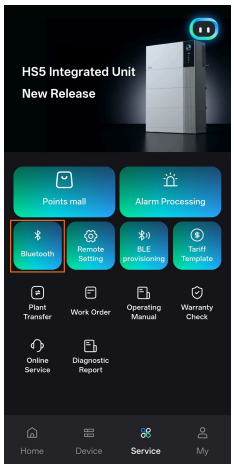

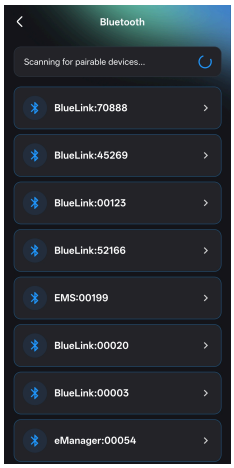

2. Tap **One-Click Initialize** to start initialization.
   Example:

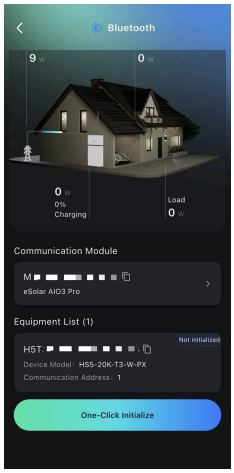

3. Configure the network parameters.
   Example:

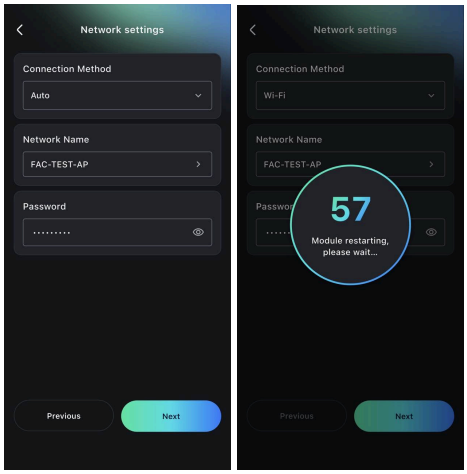

Example:

Parameter	Description
Connection Method	The network connection type. . **Auto** . **Wi-Fi** . **Ethernet**: ensure that the Ethernet cable is connected to the router.
Network Name	The Wi-Fi network to connect to.
Password	The password for the selected Wi-Fi network.

4. Configure the export limitation function.
   The export limitation function controls the maximum power that the inverter exports to the grid.
   Example:

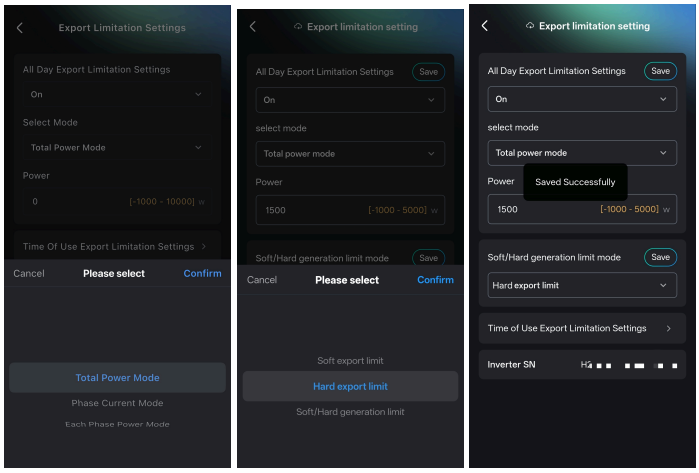

Parameter	Description
All Day Export Limitation Settings	Enable or disable the export power limitation function that runs continuously throughout the entire day.

Parameter	Description
Select Mode	The modes for the export power limitation function. • **Total Power Mode** • **Phase Current Mode** • **Each Phase Power Mode** **Phase Current Mode** and **Each Phase Power Mode** are only applicable for three-phase inverters.
Power	The export power limit value.
Soft/Hard generation limit mode	• **Soft export limit**: enable software limit control only, and the export limit is the user-defined power limit value. – In case of communication loss, the inverter exports power within the AC grid output power limit. – In 60 seconds after communication recovery, the export limit is controlled by the user-defined power limit value again. • **Hard export limit**: enable both software and hardware limit controls. – When the export power exceeds the user-defined limit for 5 seconds, the inverter enters standby mode. The inverter restarts automatically in 60 seconds, gradually ramping up its output power. – In case of communication loss for 5 seconds, the inverter stops working. • **Soft/Hard generation limit**: the control mode is similar to **Hard export limit**. Only that the inverter enters standby mode when the export power exceeds the user-defined limit for 15-20 seconds. **Note:** This parameter is only applicable for specific grid code according to local regulations.
Time Of Use Export Limitation Settings	The time-specific settings that take priority over the **All Day Export Limitation Settings**. The settings can executed once on specific time and date or repeatedly as a loop.

5. Configure the safety parameters.

Example:

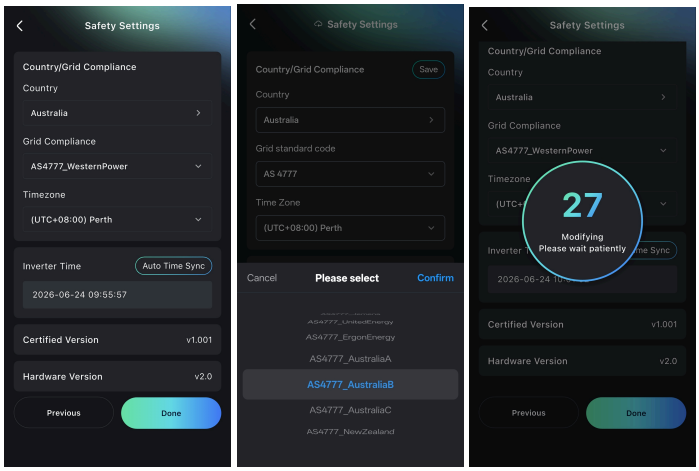

Parameter	Description
Country	The equipment installation location.

Parameter	Description
Grid Compliance	Select the grid compliance according to your installation location. Taking Australia as an example, select the specific type of compliance according to the owner's grid configuration. • **AS4777_AustraliaA**: For large interconnected power system. • **AS4777_AustraliaB**: For small interconnected power systems. For example, Western Power. • **AS4777_AustraliaC**: For isolated or remote power systems. For example, Horizon Power and TasNetworks.
Inverter Time	Tap **Auto Time Sync** to sync the inverter time to the time of the device running the App.

8.2.2. Perform installation diagnosis

After the inverter initialization is completed, perform one-click installation diagnosis to verify the installation status of the system, including the network connection, battery settings, wiring status, and so on.

1. On the **Home** page, tap the device name to open the **Device Details** page.
   Example:

2. Tap **Installation Diagnostics** to start one-click diagnosis.

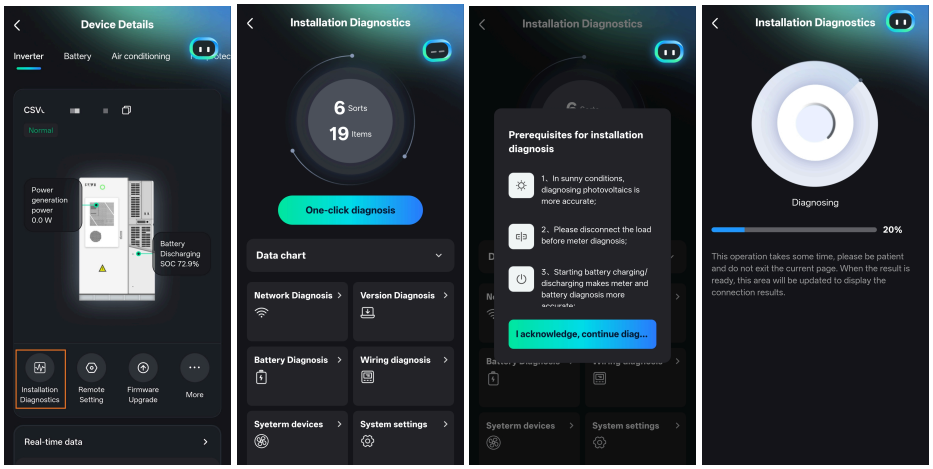

Note: If the software versions of the product are too low, follow the prompt-up to upgrade the system version first.

3. Check the faulty diagnostics results and take the suggested actions.
   Example:
   a. Tap **Wiring diagnosis** to check the detailed issue and suggested actions.
   b. Tap **No Meter** to change the meter settings where applicable or ignore this issue.

c. Tap **Re-diagnosis** to run the check again.

d. Take necessary actions until the issue is resolved.

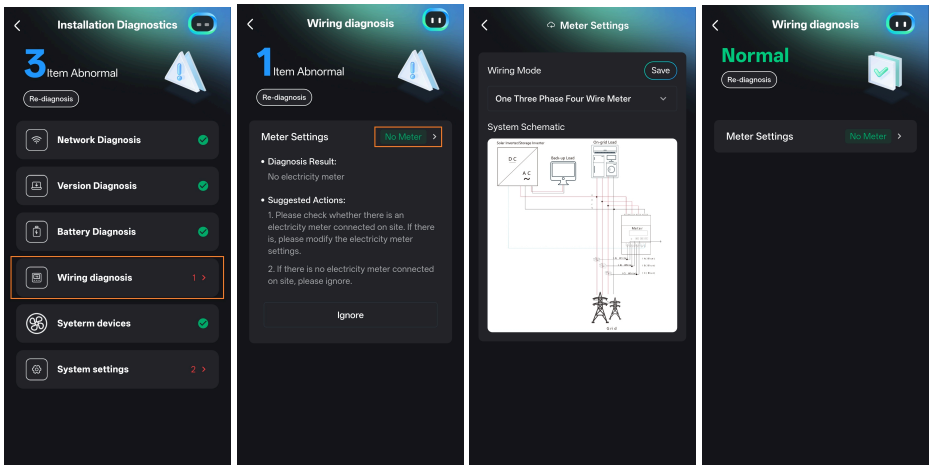

8.2.3. Run self-test for grid connection (For Italy)

Italian Standard CEI0-21 requires a self-test function for all inverters that connect to the utility grid. During the self-testing time, the inverter will check the reaction time for over-frequency, under-frequency, over-voltage and under-voltage. The self-test ensures that the inverter can disconnect from the grid when required. If the self-test fails, the inverter cannot feed into the grid.

1. On page **Service**, tap **Bluetooth**. Select the communication module, inverter or EMS according to the last five digits of the serial number (SN).
   Example:
   - **BlueLink: 45269** for a communication module or inverter.
   - **EMS: 00199** for EMS units.

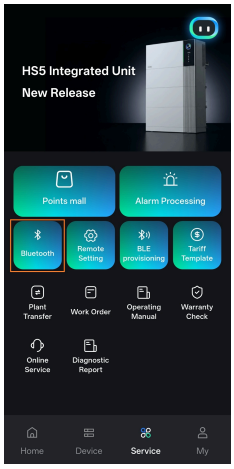

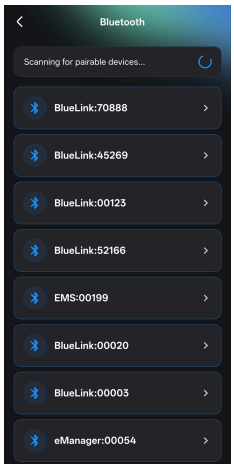

2. On the **Remote Setting** page, tap **Safety Settings** and check whether the grid compliance is set to **Italy** grid codes. Change the settings if needed.

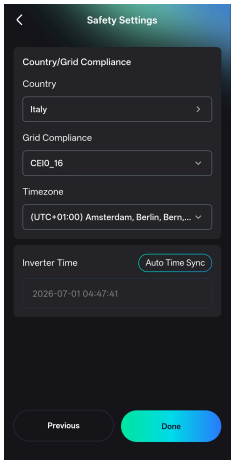

3. On the **Local Connection** page, tap **Self-check**. Choose the self-test items as required, and tap **Save**.

   It takes around 5 minutes to complete each item. After the test item is completed, **Self-Test State** shows **Initialization**.

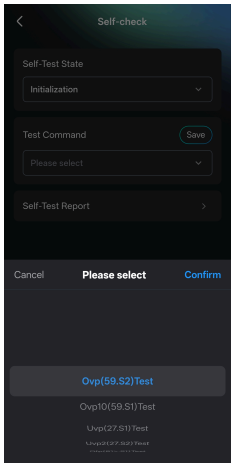

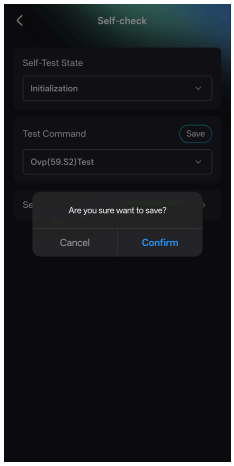

4. Tap **Self-Test Report** to check the test report. Download the test report if the self-test fails and contact **SAJ** or your inverter supplier.

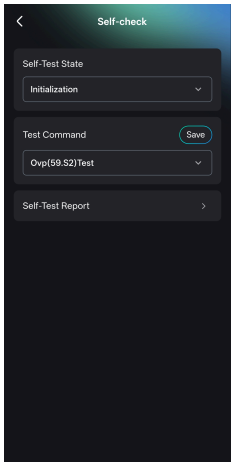

8.3. Plant management

8.3.1. Create a power plant

Follow this procedure to create a power plant.

1. On the **Home** page, tap **Create Plant**.

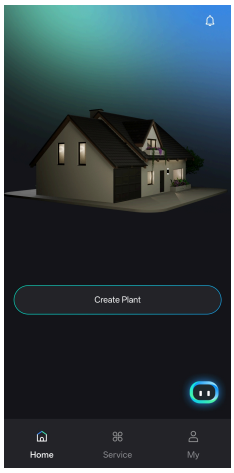

2. Provide the product serial number (SN) to add the devices in the plant.
   - **Manual Input**: Enter the SN of the inverter or the communication module.
   - **Add By Scanning**: Scan the SN.
   - **Bluetooth Device Scan**: Connect to the inverter or communication module through Bluetooth connection.

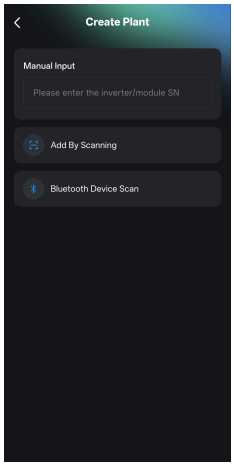

3. Configure the plant details based on the owner's actual information.

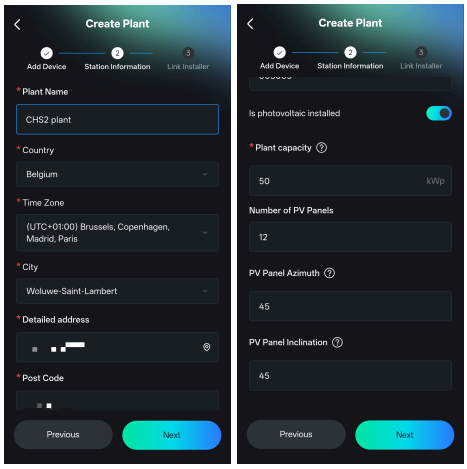

4. Provide the end user and installer information for future maintenance and support purposes.

   The installer company code is created when the installed signs up at the App. For example, 19O67G.

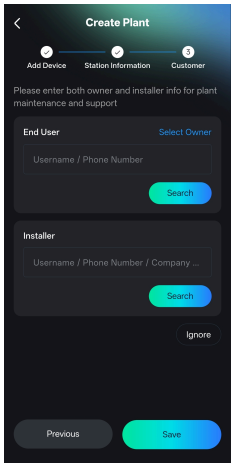

5. After the plant is created successfully, check the plant status as needed.

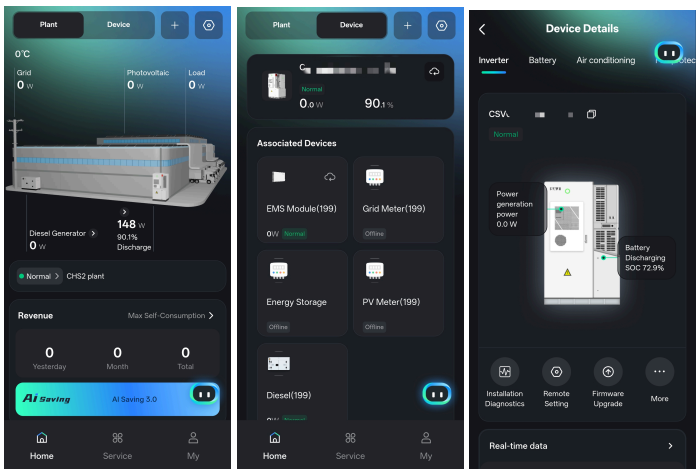

8.3.2. View the power plant details

Follow this procedure to check detailed power plant information.

1. On the **Home** page, select and tap the target power plant.
   Example:

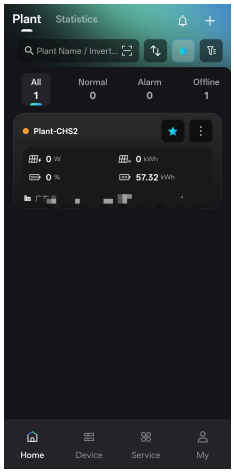

2. Check the following plant information.

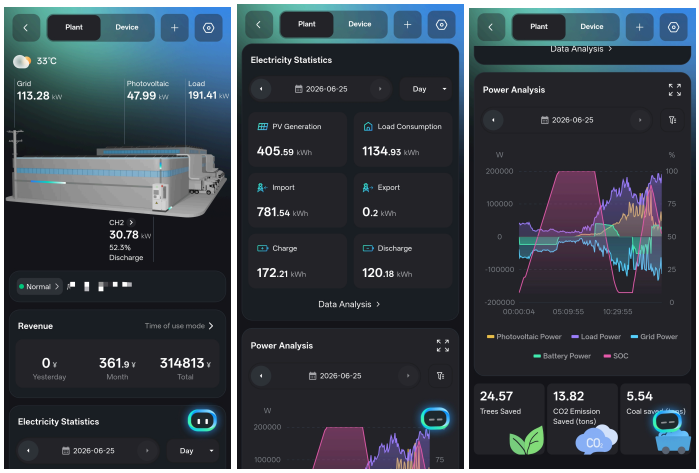

Information	Description
Live energy information	• **Grid**: The power that the device is importing from or exporting to the grid. • **Photovoltaic**: The current power generated by the PV array. • **Load**: The overall power consumption by the load. • **Discharge**: The current SOC of the battery system.
Revenue	The daily, monthly, and total revenue of the power plant.
Electricity Statistics	The energy statistics of the power plant. Daily, weekly, monthly, yearly, and total statistics are available for detailed data analysis.
Power Analysis	The power statistics of the power plant.

Table 8.2. Power plant information

3. Tap each highlighted area for further information or operation.

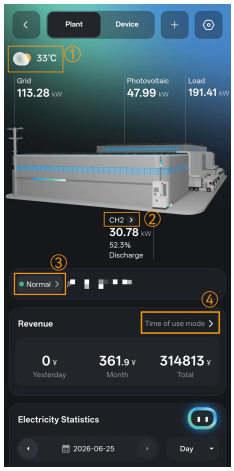

Number	Description
①	Tap to check the weather forecast.
②	Tap to open the **Device Details** page for detailed device status and operations like remote settings.
③	Tap to open the alarm messages list.
④	Tap to check or modify the working strategy of the device.

8.4. View product information

8.4.1. Check alarm messages

On the elekeeper App, monitor the system and check the real-time alarm messages.

1. Open the alarm message list with one of the options:
   - On the **Home** page, tap the plant status icon in the middle. For example:

   - On the **Service** page, tap **Alarm Processing**.

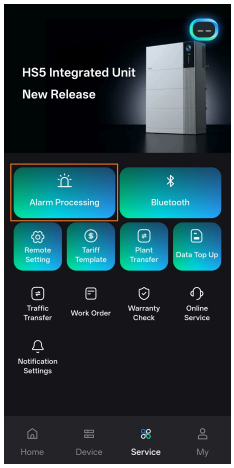

2. On the **Alarm** page, tap the alarm severity to open the alarm details.

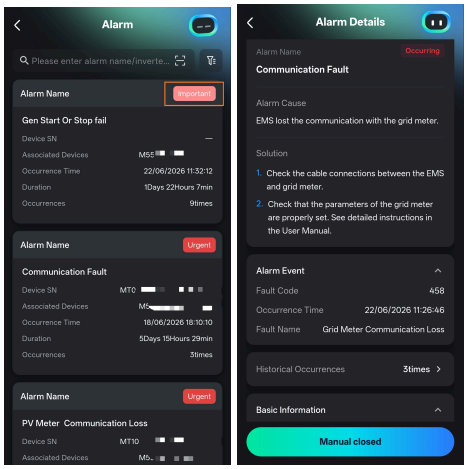

3. Take the suggested troubleshooting actions. Or close the alarm manually if applicable.

8.4.2. Check battery status

The installation engineer or the owner can follow this procedure to check the battery status on the elekeeper App.

1. On the **Home** page, tap the plant to open the plant details page. Then tap the product name to open page **Device Details**.
   Example:

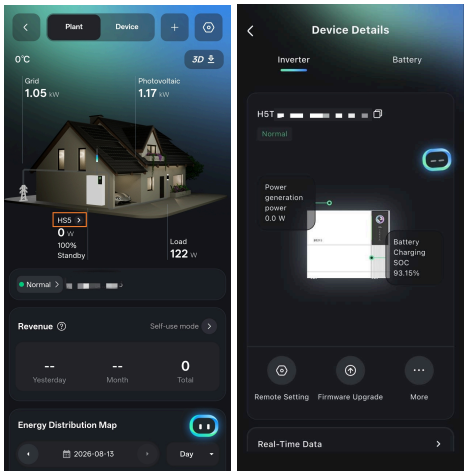

2. Tap page **Battery** to open the battery details page.
   Example: View the SoC and remaining energy of the battery system:

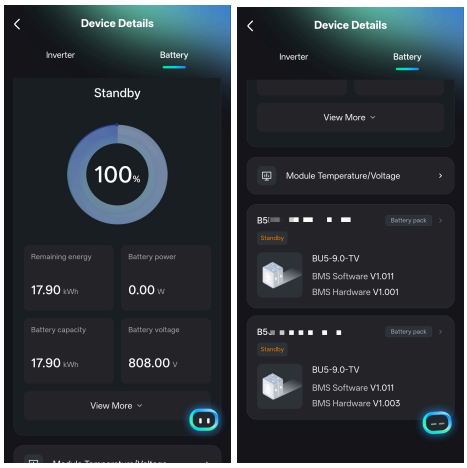

3. Check the battery module temperature and voltage as needed.

Example:

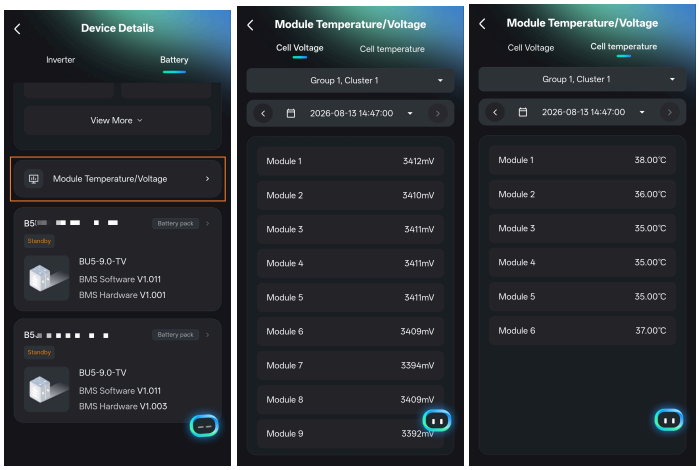
Device Details
Inverter
Battery
View More
Module Temperature/Voltage
Battery pack
Standby
BU5-9.0-TV
BMS Software V1.011
BMS Hardware V1.001
Battery pack
Standby
BU5-9.0-TV
BMS Software V1.011
BMS Hardware V1.003
Module Temperature/Voltage
Cell Voltage
Cell temperature
Group 1, Cluster 1
2026-08-13 14:47:00
Module 1 3412mV
Module 2 3410mV
Module 3 3411mV
Module 4 3411mV
Module 5 3411mV
Module 6 3409mV
Module 7 3394mV
Module 8 3409mV
Module 9 3392mV
Module Temperature/Voltage
Cell Voltage
Cell temperature
Group 1, Cluster 1
2026-08-13 14:47:00
Module 1 38.00℃
Module 2 36.00℃
Module 3 35.00℃
Module 4 35.00℃
Module 5 35.00℃
Module 6 37.00℃

8.4.3. View the inverter firmware version

(For Installer role only) Follow this procedure to view the following inverter firmware versions:

- **Display Board Version**: advanced RISC machine (ARM) version
- **Control Board Version**: digital signal processor (DSP) version

1. On the **Home** page, tap the device name to open the **Device Details** page.
   Example:

2. Tap **More**.
   Example:

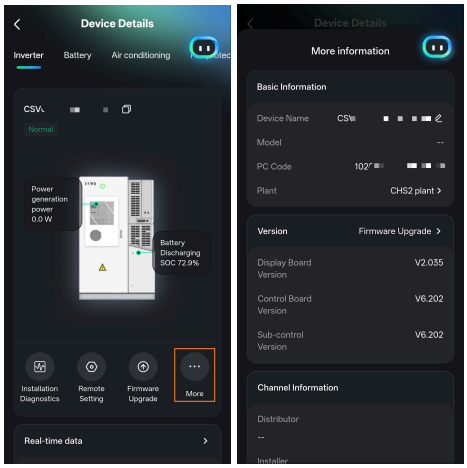

3. On the **Device Details** page, tap **Firmware Upgrade** to upgrade the software versions as needed.

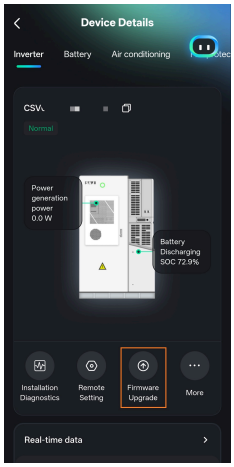

8.4.4. View the V-Watt and V-Var settings

This inverter complies with AS/NZS 4777.2: 2020 for power quality response modes. It meets DNSPs' grid connection rules and requirements for the volt-watt and volt-var settings in different regions.

> **Note:**
>
> With regard to the power rate limit mode, SAJ product sets the product WGra to 16.67% Pn by default in the following cases according to the requirements of 3.3.5.2 as 4777.2: 2020.
>
> - Soft ramp up after connection.
> - Reconnect or soft ramp up/down following a response to frequency disturbance.

1. On page **Service**, tap **Bluetooth**. Select the communication module, inverter or EMS according to the last five digits of the serial number (SN).
   Example:
   - **BlueLink: 45269** for a communication module or inverter.
   - **EMS: 00199** for EMS units.

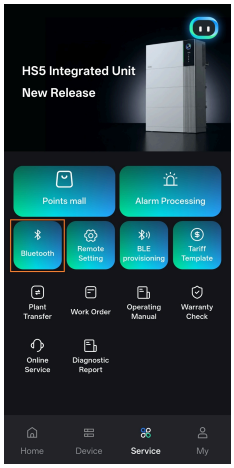

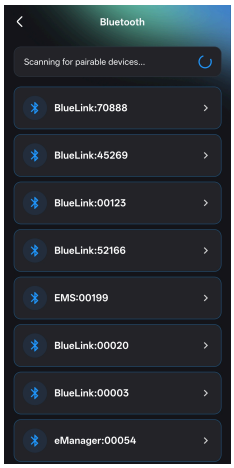

2. On the **Remote Setting** page, tap **Safety Settings** and check whether the grid compliance is set to **Australia** grid codes. Change the settings if needed.

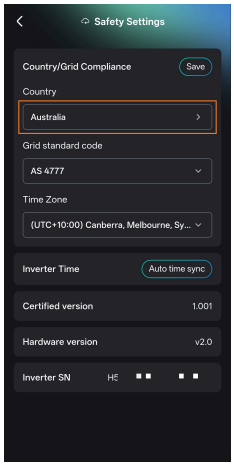

3. On the **Remote Setting** page, select **V-Watt/V-Var** to view the parameter values.

   For **V-Watt** response mode:

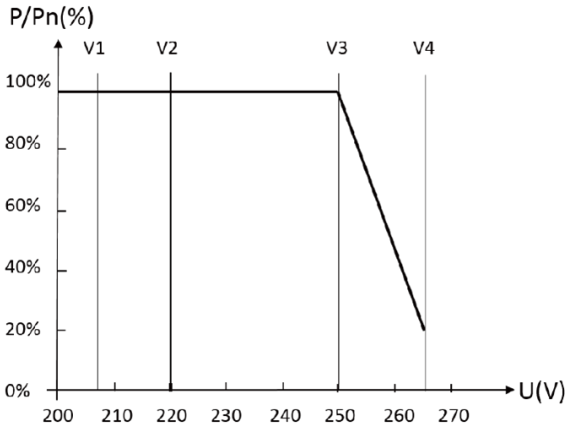

Figure 8.1. **Curve for a Volt-Watt response mode (AS4777 Series)**

Parameters: 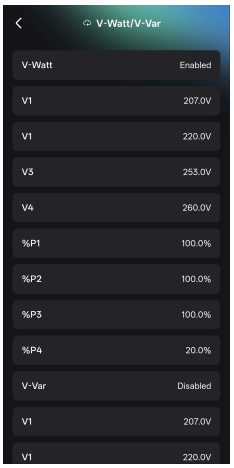

For **Volt-Var** control mode:

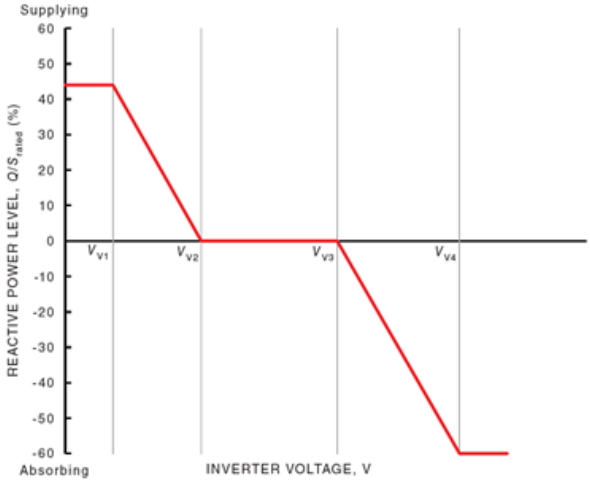

Figure 8.2. **Curve for a Volt-Var control mode (AS4777 Series)**

Parameters:

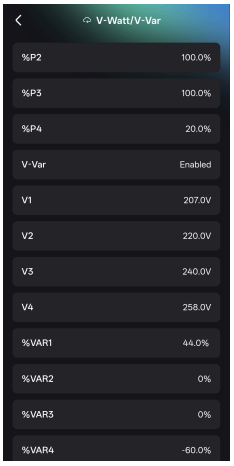

8.5. System function configurations

8.5.1. Configure working strategy

Follow this procedure to configure the device working strategy.

Note: The working strategy options and parameters may vary for different devices. Configure the parameters based on the actual App.

1. On page **Service**, tap **Bluetooth**. Select the communication module, inverter or EMS according to the last five digits of the serial number (SN).
   Example:
   - **BlueLink: 45269** for a communication module or inverter.
   - **EMS: 00199** for EMS units.

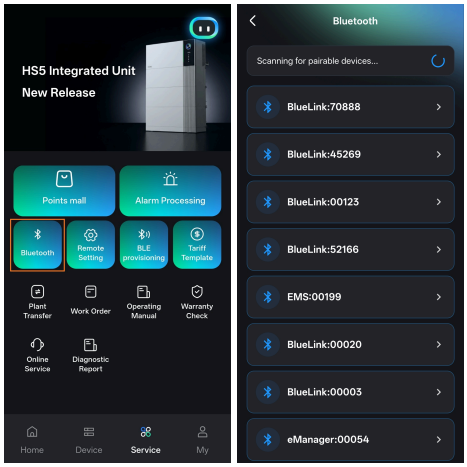

2. Select **Strategy Configuration** or **Working Modes** (depending on the device) to configure the parameters as needed.
3. For mode **Max Self-Consumption**, configure the following parameters:

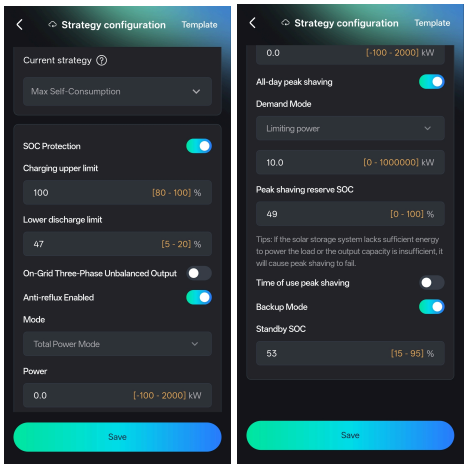

Parameter	Description
Current strategy	The active working strategy for the device.
SOC Protection	Whether to enable battery state of charge (SOC) protection to help prevent excessive charging or discharging.
Charging upper limit	The maximum battery SOC allowed during charging. Once reached, the battery stops charging.

Parameter	Description
Lower discharge limit	The minimum battery SOC allowed during discharging to protect the battery from over-discharge. Once reached, the battery stops discharging.
On-Grid Three-Phase Unbalanced Output	Whether to enable three-phase unbalanced output when the system is operating on-grid. This parameter is applicable for three-phase inverters only.
Anti-reflux Enabled	Enables or disables export limit control function to prevent power from feeding back to the grid.
Mode	Selects the export limit control mode used by the system.
Power	The power limit value used in the selected control mode.
All-day peak shaving	Enables or disables peak shaving throughout the entire day.
Demand Mode	Selects the demand control method used for peak shaving.
Demand Mode power	Sets the target power limit used when the selected demand mode requires a power threshold.
Peak shaving reserve SOC	Sets the battery SOC reserved for peak shaving operation.
Time of use peak shaving	Enables or disables peak shaving based on configured time periods.
Backup Mode	Enables or disables backup power operation so the battery can reserve energy for backup loads.
Standby SOC	Sets the battery SOC to be maintained in standby for backup or reserve purposes.

Table 8.3. Max Self-Consumption parameters

4. For **Time of Use Peaking Shaving** mode, configure the following parameters:

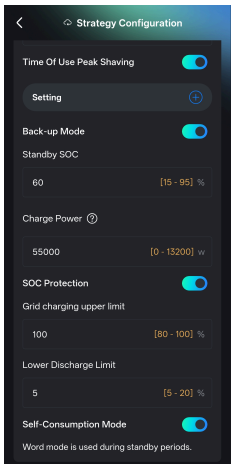

Parameter	Description
Time Of Use Peak Shaving	Enables or disables peak shaving based on configured time-of-use periods.
Setting	The time-of-use setting area where you can add and configure the charging and discharging schedules at configured charging power limit.
Back-up Mode	Whether to enable the backup power operation so the battery can reserve energy for backup loads.
Standby SOC	The battery SOC to be maintained in standby for backup or reserve purposes.
Charge Power	The charging power used when backup mode charging is active.

Parameter	Description
SOC Protection	Whether to enable battery state of charge (SOC) protection to help prevent excessive charging or discharging.
Grid charging upper limit	The maximum battery SOC allowed when charging from the grid.
Lower Discharge Limit	The minimum battery SOC allowed during discharging to protect the battery from over-discharge.
Self-Consumption Mode	Whether to enable self-consumption mode during standby periods. • For CHS2 series, enable this option of **Self-Consumption Mode** for the non-charging or non-discharging periods so that the system can work in self-consumption mode when the system is not charging or discharging. If this option is disabled during these periods, the system will be at the bypass status and provides no power to the backup loads.

Table 8.4. TOU mode parameters

5. For **Micro-Grid Mode**, configure the following parameters:

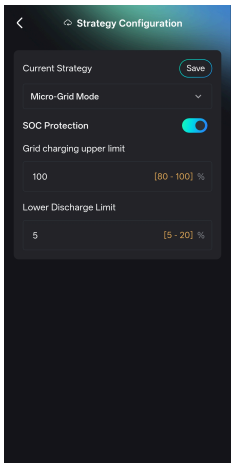

Parameter	Description
Current Strategy	The active working strategy for the device.
SOC Protection	Enables or disables battery SOC protection to help prevent excessive charging or discharging in micro-grid mode.
Grid charging upper limit	The maximum battery SOC allowed when charging from the grid.
Lower Discharge Limit	Sets the minimum battery SOC allowed during discharging to protect the battery from over-discharge.

Table 8.5. Micro-Grid mode parameters

6. For **VPP Mode**, configure the following parameters:

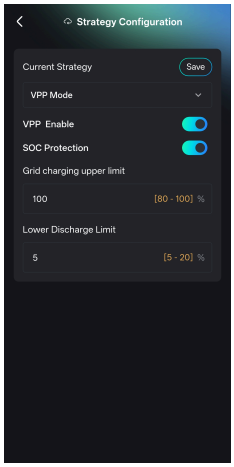

Parameter	Description
VPP Enable	Enables or disables VPP mode for the device.
SOC Protection	Enables or disables battery SOC protection to help prevent excessive charging or discharging in VPP mode.
Grid charging upper limit	The maximum battery SOC allowed when charging from the grid.
Lower Discharge Limit	Sets the minimum battery SOC allowed during discharging to protect the battery from over-discharge.

Table 8.6. VPP mode parameters

8.5.2. Set the battery parameters

The installation technicians can configure the **Battery Settings** during the initialization of the inverter on the elekeeper App or set the parameters after installation through remote connection.

1. On page **Service**, tap **Bluetooth**. Select the communication module, inverter or EMS according to the last five digits of the serial number (SN).
   Example:
   - **BlueLink: 45269** for a communication module or inverter.
   - **EMS: 00199** for EMS units.

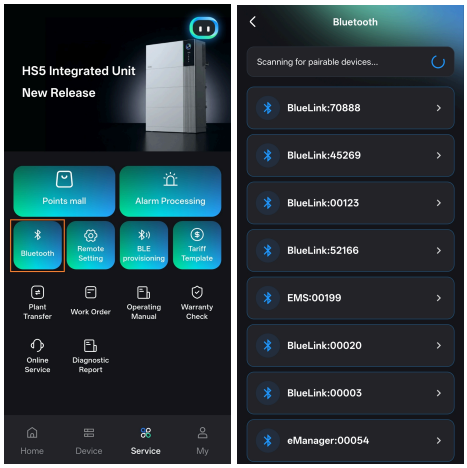

2. Select **Battery Settings** and configure the parameters as needed.

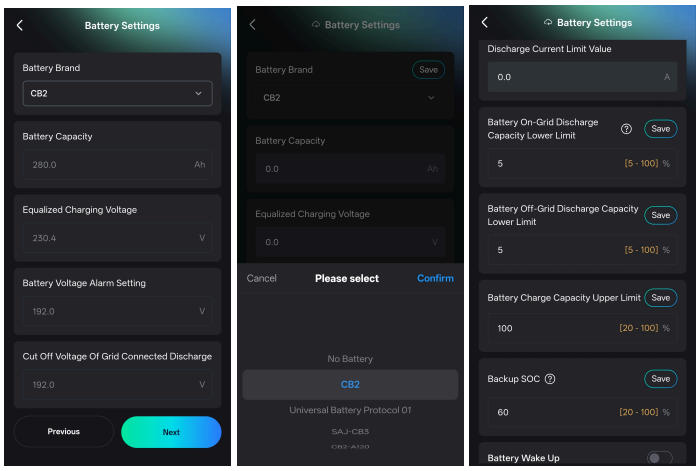

Parameter	Description
Battery Brand	The brand of the battery currently adapted for match the corresponding BMS communication protocol.
Battery Capacity	The rated ampere-hour capacity (Ah) of the battery pack, used by the system to estimate total energy (kWh) and remaining runtime.
Equalized Charging Voltage	The maximum charging voltage limit for the battery. When reached, charging stops or switches to constant voltage to prevent overcharging and cell damage.
Battery Voltage Alarm Setting	The voltage threshold at which a low-voltage alarm is triggered. It reminds the user to monitor battery level.

Parameter	Description
Cut Off Voltage Of Grid Connected Discharge	The voltage at which the battery hard-stops discharging during grid-tied operation and switches to grid power, serving as the final physical protection.
Charge Current Limit Value	The maximum charging current (A) allowed by the battery. The system limits the input power beyond this current to protect cells from high current stress.
Discharge Current Limit Value	The maximum discharging current (A) allowed. The load power is limited beyond this current to avoid overcurrent damage to the battery.
Battery On-Grid Discharge Capacity Lower Limit	The SOC percentage at which discharging stops during grid-tied operation, switching to grid power to reserve energy for unexpected outages.
Battery Off-Grid Discharge Capacity Lower Limit	The lower SOC percentage (typically lower than the grid-tied value) allowed during off-grid/power outage situations to extend emergency backup duration.
Battery Charge Capacity Upper Limit	The SOC percentage at which charging stops. Reducing this value can prolong battery life.
Backup SOC	The target SOC threshold maintained by the system (higher than the grid-tied discharge limit). When SOC falls below this, the system prioritizes PV or grid charging to ensure sufficient backup power.
Battery Wake Up	A function to force a wake-up voltage or restart communication when the battery enters sleep state due to undervoltage, overtemperature, or BMS protection, allowing reconnection without physical rewiring.

Table 8.7. Battery parameters

8.5.3. Configure main circuit breaker power monitoring

The main circuit breaker power monitoring function dynamically restricts power drawn from and fed to the grid, avoiding over-current tripping of your main circuit breaker.

1. Under the **Settings** tab on the device page, tap **Main Circuit Breaker Power Monitoring**.
2. From the drop down list of **Main Circuit Breaker Power Monitoring**, select **On** to enable this function.
3. Select the power monitoring mode and configure the corresponding parameters.
   Example:

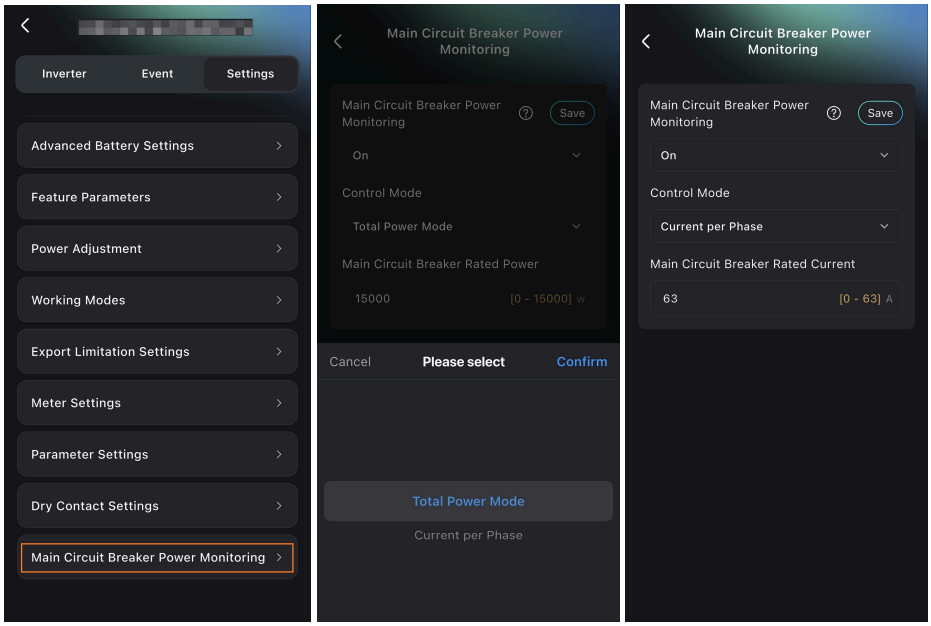

Mode	Mode description	Steps
Total Power Mode	The inverter monitors the total import and export power in real time. When it exceeds the configured rated power of the main circuit breaker, the inverter restricts the import and export power to prevent overload tripping.	a. For **Control Mode**, select **Total Power Mode**. b. Configure a value for **Main Circuit Breaker Rated Power**.
Current per Phase Mode	The inverter monitors the current of each individual phase in real time. When it exceeds the configured rated current of main circuit breaker, the inverter dynamically restricts import and export power to prevent overload tripping.	a. For **Control Mode**, select **Current per Phase**. b. Configure a value for **Main Circuit Breaker Rated Current**.

8.5.4. Configure power adjustment function

The power adjustment function allows the inverter to regulate and optimize the output power according to grid requirements and operational conditions. This function enables the inverter to adjust active and reactive power dynamically to improve grid stability, comply with local regulations, and enhance energy efficiency.

1. On page **Service**, tap **Bluetooth**. Select the communication module, inverter or EMS according to the last five digits of the serial number (SN).
   Example:
   - **BlueLink: 45269** for a communication module or inverter.
   - **EMS: 00199** for EMS units.

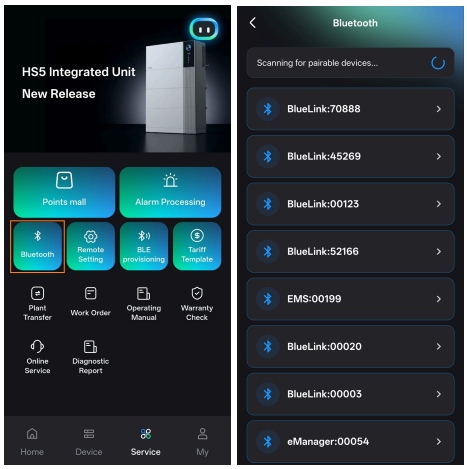

2. Select **Parameter settings**, and configure the power adjustment parameters as needed.

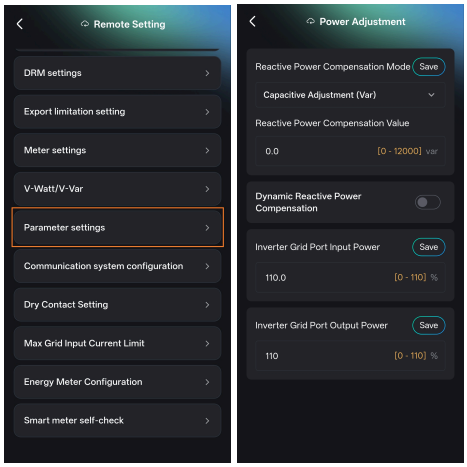

3. For **Active power control**, select the corresponding parameter groups and configure the corresponding parameters as needed:

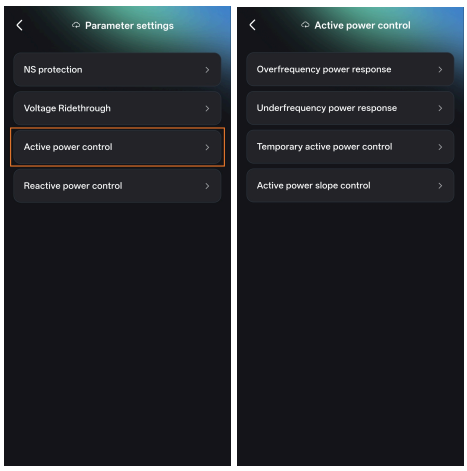

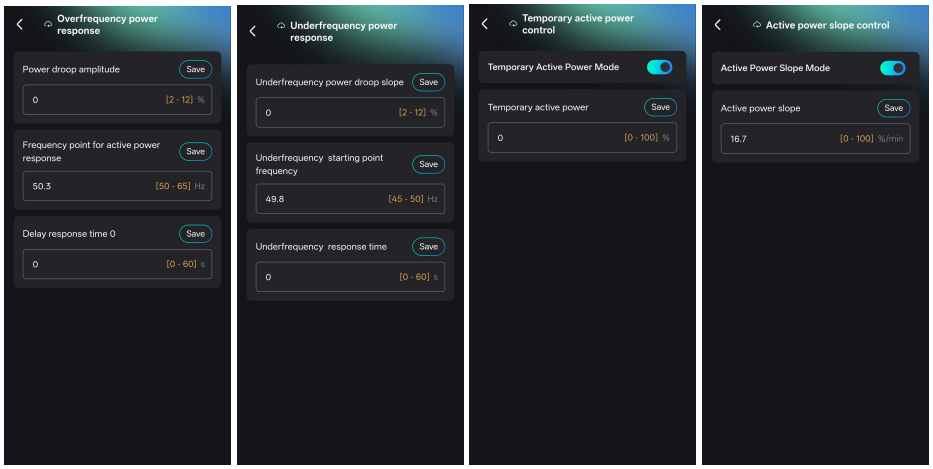

4. For **Reactive power control**, enable the control function first and then configure the corresponding parameters as needed:

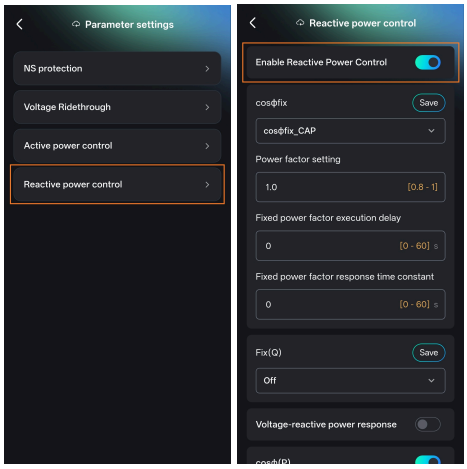

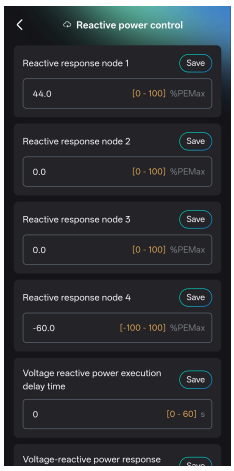

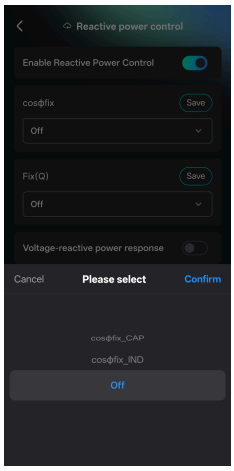

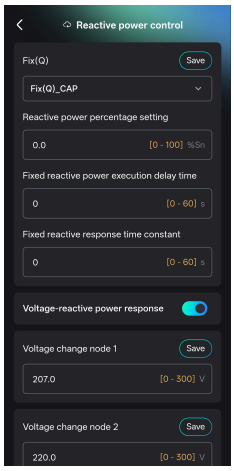

8.5.5. Configure the DRM settings

When the **Country** is set to Australia on page **Safety Settings**, set the demand response mode (DRM) according to local regulations as needed.

1. On the **Home** page, tap the device name to open the **Device Details** page.
   Example:

2. On page **Device Details**, tap **Remote Setting** to open the device settings.
   Example:

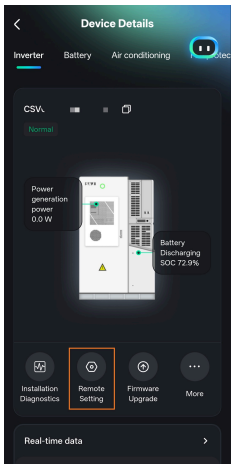

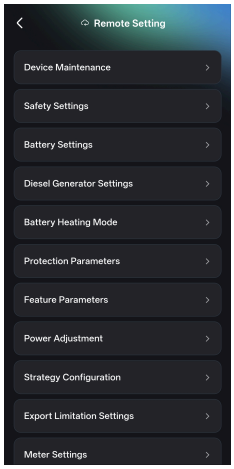

Note: The settings menu and parameter list may vary for different devices and user roles.

3. Select **DRM Settings**, and enable the **DRM Check** function.

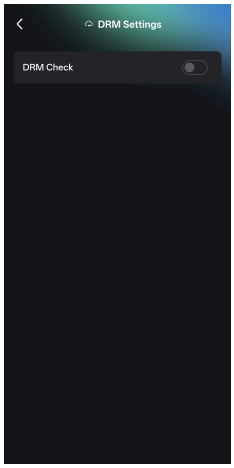

8.5.6. Configure G100 function

The G100 function is only applicable when the **Country** setting is UK (United Kingdom) on page **Safety Settings**. This function controls the export and import limit at the connection point of the distribution network.

If export and import limit control fails at the connection point, the inverter (or PCS, hereinafter referred as the inverter) will shut down and can only be restarted by resetting the G100 system. If the failure happens four times within 30 days, the inverter will be locked and can only be restored to operation by clearing the fault history.

1. On page **Service**, tap **Bluetooth**. Select the communication module, inverter or EMS according to the last five digits of the serial number (SN).
   Example:
   - **BlueLink: 45269** for a communication module or inverter.
   - **EMS: 00199** for EMS units.

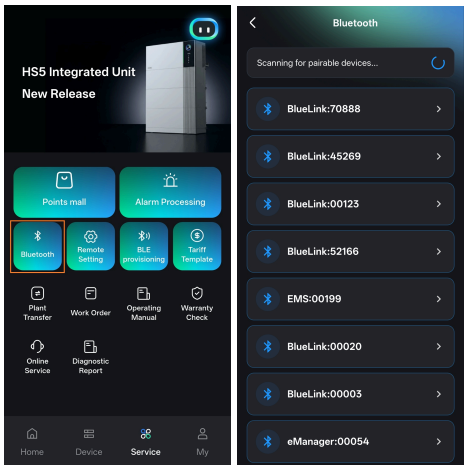

2. Select **G100 Settings** to configure the parameters as needed.

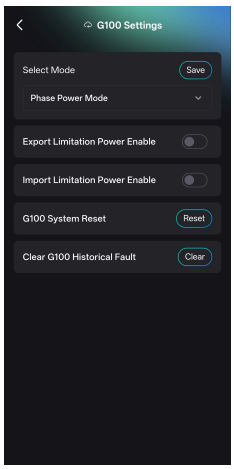

Parameter	Description
Mode	Whether to control the export and import power limit per total power or per phase power.
Export Limitation Power Enable	The total power or phase power to be exported to the grid depending on the mode.
Import Limitation Power Enable	The total power or phase power to be imported from the grid depending on the mode.

Parameter	Description
G100 System Reset	To restart the inverter after an export or import limit control failure happens.
Clear G100 Historical Fault	To manually clear the history of limit control failures for restarting the inverter.

Table 8.8. G100 settings

9. System maintenance

9.1. Routine maintenance

To ensure that the system lifespan, perform the suggested routine maintenance operations.

DANGER

Danger of electric shock

Before operating on the system for cleaning, cable inspection, component maintaining, power off the whole system. Do not open any product cover until 5 minutes after disconnecting all sources of supply.

Note:

To purchase the routine maintenance service, contact the installer, distributor, or **SAJ** product support.

System routine maintenance

Check item	Check method	Maintenance interval
System cleanliness	Check periodically whether the heat sinks are blocked or dirty.	Once every 6 to 12 months
Cleanness of air intake and exhaust vents	Check periodically whether there is dust or foreign objects at the air intake and exhaust vents: 1. Power off the whole system. 2. Remove dust and foreign objects. 3. If necessary, remove the baffle plates from the air intake and exhaust vents for cleaning.	Once every 6 to 12 months (or once every 3 to 6 months based on the actual dust conditions in the environment)
Fan	Check whether the fan generates abnormal noise during operation. Check for and remove any foreign objects from the fan. If the abnormal noise persists, replace the fan.	Once every 6 to 12 months
System running status	1. Check whether the inverter is damaged or deformed. 2. Check whether the inverter generates abnormal sound during operation. 3. Check whether all inverter parameters are correctly set during operation.	Once every 6 months
Electrical connection	1. Check whether cables are disconnected or loose. 2. Check whether cables are damaged, especially whether the cable sheath that contacts a metal surface is damaged.	6 months after the first commissioning and once every 6 to 12 months after that
Grounding reliability	Check whether the PE cable is securely connected.	6 months after the first commissioning and once every 6 to 12 months after that
Sealing	Check whether all terminals and ports are properly sealed.	Once a year

Battery-specific routine maintenance

Check item	Check method	Maintenance interval
Battery routine maintenance (tool requirement)	1. Use only manufacturer-provided professional tools to inspect, test, or service the battery pack. 2. Do not disassemble, modify, or perform maintenance on the battery pack without proper training and approved tools.	Applicable to all battery maintenance activities
Battery module appearance	1. Check the battery modules for swelling, deformation, cracks, liquid leakage, corrosion, or abnormal odor. 2. Check the battery enclosure for damage, deformation, or signs of overheating.	Once every 6 to 12 months
Battery terminal and connection check	1. Power off the entire system before performing any checks. 2. Inspect all battery terminals and connectors for looseness, oxidation, or signs of overheating. 3. Verify that all cable connections are tight and properly torqued to the specified value using manufacturer-approved tools.	6 months after the first commissioning and once every 6 to 12 months after that
Battery operating status & parameters	1. Check the battery pack status such as SOC, voltage, current, and temperature. 2. Ensure no cell voltage imbalance, over-temperature, or other alarms are reported. 3. Verify the battery communicates normally with the inverter/BMS.	Once every 6 months
Battery ventilation and environment	1. Check that the battery compartment and ventilation openings are free of dust, debris, or blockages. 2. Ensure the battery is installed in a well-ventilated, cool, and dry environment away from heat sources or direct sunlight.	Once every 6 to 12 months (or once every 3 to 6 months in dusty environments)

9.2. Troubleshooting

For the errors reported as below, contact the service support for further assistance.

The troubleshooting operations must be performed by authorized technicians only.

Error code	Error message
1	Master Relay Error
2	Master EEPROM Error
3	Master Temperature High Error
4	Master Temperature Low Error
5	Master Lost Communication M<->S
6	Master GFCI Device Error
7	Master DCI Device Error
8	Master Current Sensor Error
9	Master Phase1 Voltage High
10	Master Phase1 Voltage Low
11	Master Phase2 Voltage High
12	Master Phase2 Voltage Low
13	Master Phase3 Voltage High
14	Master Phase3 Voltage Low
15	Master Voltage 10Min High
16	Master OffGrid Voltage Low
17	Master Output_Shorter
18	Master Grid Frequency High
19	Master Grid Frequency Low
20	BATInputMode Error
21	Master Phase1 DCV Error
22	Master Phase2 DCV Error
23	Master Phase3 DCV Error
24	Master No Grid Error
25	DC ReverseConnect Error
26	Parallel machine CAN Com Error
27	Master GFCI Error
28	Master Phase1 DCI Error
29	Master Phase2 DCI Error
30	Master Phase3 DCI Error
31	Master ISO Error
32	Master Bus Voltage Balance Error
33	Master Bus Voltage High
34	Master Bus Voltage Low
35	Master Grid Phase Error
36	Master PV Voltage High Error
37	Master Islanding Error
38	Master HW Bus Voltage High
39	Master HW PV Current High

Error code	Error message
40	Master SelfTestFailed
41	HW Inv Current High
44	Master Grid NE Voltage Error
45	Master Fan1 Error
46	Master Fan2 Error
47	Master Fan3 Error
48	Master Fan4 Error
49	Lost Communication between DSP and PowerMeter
50	Lost Communication between M<->S
51	Lost Communication between inverter and Grid Meter
52	HMI EEPROM Error
53	HMI RTC Error
55	BMS Lost.Conn Warn
56	CT Device Err
58	Lost Com.H<->S Err
59	Lost Communication between inverter and PV Meter
60	EV_Lost.Conn Warn
78	Grid Power Emergency Disconnect
81	Lost Communication D<->C
83	Master Arc Device Error
84	Master PV Mode Error
85	Authority expires
86	DRM0 Error
87	Master Arc Error
88	Master SW PV Current High
89	Master Battery Voltage High
90	Master Battery Current High
91	Master Battery Charge Voltage High
92	Master Battery OverLoad
93	Master Battery SoftConnet TimeOut
94	Master Output OverLoad
95	Master Battery Open Circuit Error
96	Master Battery Discharge Voltage Low
97	BMS Internal Communication Error
98	Bat Sequence Error
99	Discharge Over Current Protect
100	Charge Over Current Protect
101	Module Under Voltage Protect
102	Module Over Voltage Protect
103	Single Cell Under Voltage Protect
104	Single Cell Over Voltage Protect
105	BMS Hardware Error
106	Charge Cell Under Temperature Protect

Error code	Error message
107	Charge Cell Over Temperature Protect
108	Discharge Cell Under Temperature Protect
109	Discharge Cell Over Temperature Protect
110	Relay Error
111	Pre-charge Error
112	Insulation Error
113	BMS supplier Incompatibility
114	Battery cell supplier Incompatibility
115	Battery cell Incompatibility
116	Battery pack models or grades are inconsistent
117	Circuit Breaker Is Open
118	Temperature Difference Is Too Wide
119	Voltage Difference Is Too Wide
120	Voltage Difference Is Too Wide
121	BMS Over Temperature Protect
122	Short Circuit Protect
123	Total voltage match failed
124	The system is locked
125	FUSE error protection
126	Battery Port Voltage Abnormal Protection
127	Heating Film Overtemperature Protection
128	Abnormal Temperature Increases

10. Product specification

10.1. EK70 HS5-(8K-20K)-T3-X

Model		EK70 HS5-8K-T3-X [1]	EK70 HS5-10K-T3-X	EK70 HS5-12K-T3-X	EK70 HS5-12K-T3-X-IE	EK70 HS5-15K-T3-X	EK70 HS5-20K-T3-X
PV DC Input							
Recommended max. PV power		16000	20000	24000	24000	30000	40000
Max. Input Voltage (V)		1000					
MPPT Voltage Range (V)		150-900					
Start-up Voltage (V)		160					
Nominal DC Input Voltage (V)		600					
Max. Input Current per MPPT (A)		20/20/20				40/20/20	
Max. Short-circuit Current per MPPT (A)		25/25/25				50/25/25	
Number of MPP Trackers		3					
No. of Strings per MPP Tracker		1+1+1				2+1+1	
Battery DC Input							
Battery Type		LiFePO4					
Battery Voltage Range [V]		600-900					
BAT Communication Interface		CAN					
Max. Battery Quantity per System		6					
AC Output/Input (On-Grid)							
AC Output (On-Grid)	Rated Output Power (W)	8000	9999	12000	11000	15000	20000
	Rated Apparent Power (VA)	8000	9999	12000	11000	15000	20000
	Max. Apparent Power (VA)	8800	9999	13200	11000	16500	22000
	Rated Output Voltage (V)	3L+N+PE, 230/400					
	Rated Output Current (A)	11.6	14.5	17.4	15.9	21.7	29.0
	Max. Output Current (A)	12.8	14.5	19.1	15.9	23.9	31.9
	Adjustable Power Factor	0.8 leading-0.8 lagging					
AC Input (On-Grid)	Rated Input Voltage (V)	3L+N+PE, 230/400					
	Max. Input Current (A)	63 [2]					

Model	EK70 HS5-8K-T3-X [1]	EK70 HS5-10K-T3-X	EK70 HS5-12K-T3-X	EK70 HS5-12K-T3-X-IE	EK70 HS5-15K-T3-X	EK70 HS5-20K-T3-X
Rated AC Grid Frequency (Hz)	50/60					
Total Current Harmonic Distortion	< 3%					
AC Output (Backup)						
Max. Output Apparent Power (VA)	8000	10000	12000	12000	15000	20000
Peak Output Apparent Power (VA 10s)	16000	20000	24000	24000	30000	40000
Rated Output Voltage (V)	3L+N+PE, 230/400					
Max. Output Current (A)	11.6	14.5	17.4	17.4	21.7	29.0
Rated AC Grid Frequency (Hz)	50/60					
Adjustable Power Factor	0.8 leading-0.8 lagging					
Total Current Harmonic Distortion	< 3%					
Switch Time (ms)	≤10					
Efficiency						
Euro Efficiency	97.6%					
Max. Efficiency	98.2%					
Protection						
Insulation Monitoring	Integrated					
Residual Current Monitoring	Integrated					
DC Reverse Polarity Protection	Integrated					
Anti-islanding Protection	AFD					
AC Short-circuit Protection	Integrated					
AC Overcurrent/Overvoltage Protection	Integrated					
AC Overvoltage Category	III					
DC Overvoltage Category	II					
DVC Class	DVC-A for communication terminals; DVC-C for PV terminals, Battery terminals and all AC terminals					
Icw [kA]	≤10 kA (<10s) for all terminals					
Icc [kA]	≤10 kA (<10s) for all terminals					
Current Inrush [A] (Peak value)	36 for all AC terminals					
Max. AC Fault Current [A] (Peak value)	95 for all AC terminals					
Max. AC Overcurrent Protection [A] (RMS value)	63 for all AC terminals					
Max. DC Fault Current [A] (Peak value)	13.5 for battery terminals					

Model	EK70 HS5-8K-T3-X [1]	EK70 HS5-10K-T3-X	EK70 HS5-12K-T3-X	EK70 HS5-12K-T3-X-IE	EK70 HS5-15K-T3-X	EK70 HS5-20K-T3-X
Max. DC Overcurrent Protection [A] (RMS value)	12 for battery terminals					
Feedback Current [A]	0					
DC Switch	Integrated					
DC Surge Protection	Type II					
AC Surge Protection	Type II					
AFCI	Integrated					
Inverter Topology	Non-isolation					
Protective Class	I					
General Data						
Dimensions (W / H / D) (mm)	835 / 690 - 2050 / 270 • Inverter: 835 / 350 / 270 • Battery pack: 835 / 270 / 270 • Battery base: 835 / 70 - 80 / 270					
Weight (kg)	• Inverter: 44.5 • Battery pack: – EK70 BU5-6.0-TV: 60.4 – EK70 BU5-7.0-TV: 71.7 – EK70 BU5-9.0-TV: 79.2 • Battery base: 8					
Charging Temperature Range	0°C to +50 °C					
Discharging Temperature Range	-10°C to +50 °C					
Relative humidity range	5%-95% Non-condensing					
Corrosion resistance grade	C4					
Max. Operating Altitude (m)	3000					
Cooling	Smart air cooling					
Heating	Heating function for low-temperature operation.					
Ingress Protection Rating	IP66					
Communication	WLAN / Fast Ethernet / RS485					
Communication Module	eSolar AIO3 Pro / eSolar 4G Pro					
Warranty	Refer to the warranty policy					

1. X stands for the battery system configuration. The value of x can be 6, 7, 9, 12, 14, 15, 16, 18, 21, 24, 25, 27, 28, 30, 35, 36, 40, 42, 45, 50, and 54. Each number presents the energy storage capacity for different models. For battery combinations and ratings, refer to the battery combination datasheet.

2. The built-in 63A bypass function enables the whole-house backup power, and the current can be configured on the elekeeper App.

10.2. EK70 battery and battery system designations

This section provides the battery and battery system designations by SAJ battery code. The SAJ battery code indicates the manufacturer of the battery cell, which is determined by the 6th character of the serial number (SN) code. The SN is located on the power label attached to the battery. For example, in SN code `B5UB4M0Y2552E00002`, the 6th character **M** indicates the manufacturer.

SAJ battery code	Battery designation	Battery system designation
M	IFpP74/176/209/[(1P6S)]M/-30+50/95 IFpP74/176/209/[(1P7S)]M/-30+50/95 IFpP74/176/209/[(1P9S)]M/-30+50/95	IFpP74/176/209/[(1P6S)YP]M/-30+50/95(Y=1,2,3,4,5,6) IFpP74/176/209/[(1P7S)YP]M/-30+50/95(Y=1,2,3,4,5,6) IFpP74/176/209/[(1P9S)YP]M/-30+50/95(Y=1,2,3,4,5,6)
N	IFpP73/175/208/[(1P6S)]M/-30+50/95 IFpP73/175/208/[(1P7S)]M/-30+50/95 IFpP73/175/208/[(1P9S)]M/-30+50/95	IFpP73/175/208/[(1P6S)YP]M/-30+50/95(Y=1,2,3,4,5,6) IFpP73/175/208/[(1P7S)YP]M/-30+50/95(Y=1,2,3,4,5,6) IFpP73/175/208/[(1P9S)YP]M/-30+50/95(Y=1,2,3,4,5,6)
O	IFpP73/176/208/[(1P6S)]M/-30+50/95 IFpP73/176/208/[(1P7S)]M/-30+50/95 IFpP73/176/208/[(1P9S)]M/-30+50/95	IFpP73/176/208/[(1P6S)YP]M/-30+50/95(Y=1,2,3,4,5,6) IFpP73/176/208/[(1P7S)YP]M/-30+50/95(Y=1,2,3,4,5,6) IFpP73/176/208/[(1P9S)YP]M/-30+50/95(Y=1,2,3,4,5,6)
I	IFpP74/176/209/[(1P6S)]M/-30+50/95 IFpP74/176/209/[(1P7S)]M/-30+50/95 IFpP74/176/209/[(1P9S)]M/-30+50/95	IFpP74/176/209/[(1P6S)YP]M/-30+50/95(Y=1,2,3,4,5,6) IFpP74/176/209/[(1P7S)YP]M/-30+50/95(Y=1,2,3,4,5,6) IFpP74/176/209/[(1P9S)YP]M/-30+50/95(Y=1,2,3,4,5,6)
K	IFpP74/176/209/[(1P6S)]M/-30+50/95 IFpP74/176/209/[(1P7S)]M/-30+50/95 IFpP74/176/209/[(1P9S)]M/-30+50/95	IFpP74/176/209/[(1P6S)YP]M/-30+50/95(Y=1,2,3,4,5,6) IFpP74/176/209/[(1P7S)YP]M/-30+50/95(Y=1,2,3,4,5,6) IFpP74/176/209/[(1P9S)YP]M/-30+50/95(Y=1,2,3,4,5,6)
J	IFpP73/175/209/[(1P6S)]M/-30+50/95 IFpP73/175/209/[(1P7S)]M/-30+50/95 IFpP73/175/209/[(1P9S)]M/-30+50/95	IFpP73/175/209/[(1P6S)YP]M/-30+50/95(Y=1,2,3,4,5,6) IFpP73/175/209/[(1P7S)YP]M/-30+50/95(Y=1,2,3,4,5,6) IFpP73/175/209/[(1P9S)YP]M/-30+50/95(Y=1,2,3,4,5,6)

10.3. Battery

Model	EK70 BU5-6.0-TV	EK70 BU5-7.0-TV	EK70 BU5-9.0-TV
Performance Specification			
Battery Type	LiFePO4		
Cell Capacity (Ah)	314		
Cycle Life[1]	10000		
Total Energy Capacity (kWh)	6	7	9
Usable Energy Capacity (kWh)[2]	6	7	9
Depth of Discharge	100%		
Max. Charging / Discharging Power (W)	3000	3500	4600
Rated Voltage (V)	780		
Max. Charging / Discharging Current (A)	7.7	9.0	11.8
Recommended Charging Method	Charge at constant current of 3.85 A until reaching the maximum voltage of 780 V.	Charge at constant current of 4.5 A until reaching the maximum voltage of 780 V.	Charge at constant current of 5.9 A until reaching the maximum voltage of 780 V.
General Data			
Weight (kg)	60.4	71.7	79.2

Model	EK70 BU5-6.0-TV	EK70 BU5-7.0-TV	EK70 BU5-9.0-TV
Dimensions (W / H / D) (mm)	835 / 270 / 270		
Storage Temperature Range	-10 ℃ to +40℃		
Charging Temperature Range	-30℃ to +50℃		
Discharging Temperature Range	-30℃ to +50℃		
Relative Humidity Range	5%-95%		
Max. Operating Altitude (m)	3000		
Cooling Methods	Natural convection		
Ingress Protection Rating	IP66		
Installation Method	Ground mounting / Wall mounting		
Number of Modules per Controller (PCS)	1-6		
Compatible Inverters	EK70 series		

1. Provided by the battery manufacturer. Test conditions: 25±2℃, 0.5C charge and discharge rate, SOH 60%.
2. Provided by the battery manufacturer. Test conditions: 100% depth of discharge, 0.2C charge and discharge rate at 25℃, at the beginning of life.

GUANGZHOU SANJING ELECTRIC CO., LTD
Tel: (86) 20 66608588 **Fax:** (86) 20 66608589 **Web:** www.saj-electric.com
Add: No.9, Lizhishan Road, Science City, Guangzhou High-tech Zone, Guangdong, P.R.China

©2025-2026 Guangzhou Sanjing Electric Co., Ltd. All rights reserved.