TECHNICAL CATALOGUE
DECORATIVE AND BATHROOM RADIATORS, FAN CONVECTORS
PURMO INT. 03/2019

°CLEVER
LOW TEMPERATURE RADIATORS

PURMO
clever heating solutions

PART OF THE RETTIG GROUP

THE POWER OF A WORLD RANKING COMPANY

Rettig ICC markets a variety of top brands, well-known to professionals in the heating business at national, European and international level. Beyond the continent of Europe, we must also mention our growing operations in Asia and America. With annual sales of approximately EUR 640 million, the Rettig ICC Group can justly claim to be Europe's biggest radiator and underfloor heating company.

The values that the company brings to its customers are based on the creation, maintenance and development of win-win commercial relationships. Today, the Rettig ICC Group has the contribution of more than 4100 experienced and enthusiastic employees behind it. Rettig's products consist of steel panels, convectors, design and bathroom radiators and underfloor heating systems.

decorative radiators

type overview 5

Kos H 10

Faro H 16

Kos V 22

Faro V 26

Tinos V 30

Paros V 34

Arran 38

Narbonne 40

Narbonne VT 58

Narbonne V 72

Narbonne V VT 78

Narbonne M 84

Narbonne V M 92

accessories 123

fan convectors

Vido 130

accessories 133

bathroom radiators

type overview 134

Santorini 138

Santorini A 138

Santorini C 140

Kea 142

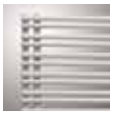
Ratea 144

Imia 146

Mauritius 148

Java 150

Muna 152

Flores CH 154

Flores C CH 156

bathroom radiators

type overview 134

Elato 158

Apolima 160

Apia 162

Leros 164

Evia 166

accessories 168

additional informations

hydraulic characteristics 169

correction factors 170

colours 171

Type overview

types

Kos H

2 connections

height [mm]: 400, 600, 750, 900
length [mm]: 450, 600, 750, 900, 1050, 1200, 1350, 1500, 1650*, 1800*, 1950*

* except for the Kos H models of height 750 and 900 mm

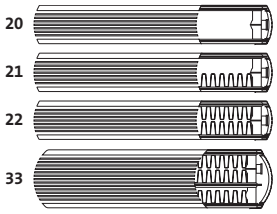

Faro H

2 connections

height [mm]: 400, 600, 750, 900
length [mm]: 450, 600, 750, 900, 1050, 1200, 1350, 1500, 1650*, 1800*, 1950*

* except for the Faro H models of height 750 and 900 mm

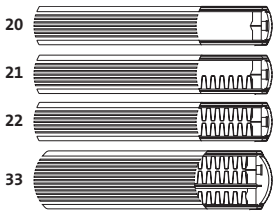

Kos V

4 connections

height [mm]: 1800, 1950, 2100
width [mm]: 300, 450, 600, 750

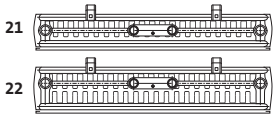

Faro V

4 connections

height [mm]: 1800, 1950, 2100
width [mm]: 300, 450, 600, 750

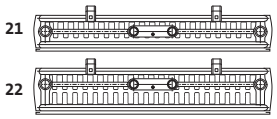

Type overview

		types
	Tinos V **6 connections** height [mm]: 1800, 1950, 2100 width [mm]: 300, 450, 600, 750	11 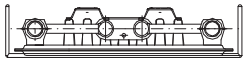 21 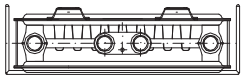
	Paros V **6 connections** height [mm]: 1800, 1950, 2100 width [mm]: 300, 450, 600, 750	11 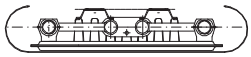 21 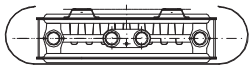
	Arran **4 connections** height [mm]: 1430, 1730 width [mm]: 514	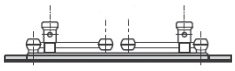

Type overview

types

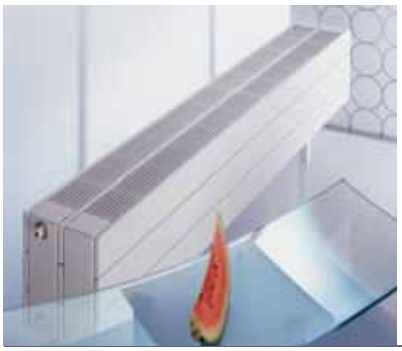

Narbonne

4 connections

height [mm]: 70, 142, 214, 286
length [mm]: 500, 600, 700, 800, 900, 1000, 1100, 1200, 1300, 1400, 1600, 1800, 2000, 2200, 2400, 2600, 2800, 3000, 3200, 3400, 3600, 3800, 4000

example of types

NA 11

NA 22

NA 34
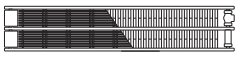

Narbonne VT

5 connections

height [mm]: 142, 214, 286
length [mm]: 500, 600, 700, 800, 900, 1000, 1100, 1200, 1300, 1400, 1600, 1800, 2000, 2200, 2400, 2600, 2800, 3000, 3200, 3400, 3600, 3800, 4000

example of types

NA 11

NA 22

NA 34
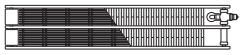

Narbonne V

4 connections

height [mm]: 1600, 1800, 2000, 2200
width [mm]: 142, 214, 286, 358, 430, 502, 574, 646, 718, 790, 862

NV 10

NV 11

NV 20

NV 21

Narbonne V VT

6 connections

height [mm]: 1600, 1800, 2000
width [mm]: 214, 286, 358, 430, 502, 574, 646, 718, 790, 862

NV 10

NV 11

NV 20

NV 21

Type overview

		types
	Narbonne M **4 connections** height [mm]: 142, 214, 286, 358, 430, 502, 574, 646, 790 length [mm]: 500, 600, 700, 800, 900, 1000, 1100, 1200, 1300, 1400, 1600, 1800, 2000, 2200, 2400	NA-M 11 NA-M 22 NA-M 34 NA-M 46 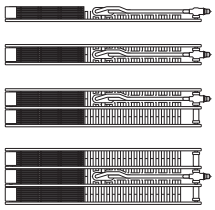
	Narbonne V M **6 connections** height [mm]: 1600, 1800, 2000 width [mm]: 214, 286, 358, 430, 502, 574, 646, 718, 790, 862	NV-M 10 NV-M 11 NV-M 20 NV-M 21 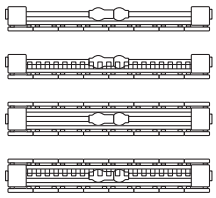
	Vido **two-pipe system or four-pipe system** height [mm]: 595 length [mm]: 800, 1000, 1200, 1400, 1600	

	Kos H	Faro H	Kos V	Faro V	Tinos V	Paros V	Arran	Narbonne	Narbonne VT	Narbonne V	Narbonne V VT	Narbonne M	Narbonne V M	VIDO
softly profiled flat front panel	-	x	-	x	-	-	-	-	-	-	-	-	-	-
flat front panel	x	-	x	-	x	x	x	-	-	-	-	-	-	x
max. working pressure [bar]	6	6	6	6	6	6	6	5 (8)	5 (8)	5 (8)	5 (8)	5 (8)	5 (8)	10
no. of connectors – side / bottom	2	2	4	4	4	4	4	4	3/2	4	4/2	4	4/2	2 or 4
side connection	-	-	-	-	-	-	-	x	-	x	-	-	-	x
bottom connection	x	x	x	x	x	x	x	-	x	-	x	-	-	-
mid-bottom connection	-	-	x	x	x	x	x	-	-	-	-	x	x	-
mounting brackets bundled with the radiator	x	x	x	x	x	x	x	-	-	-	-	-	-	x
side covers	x	x	x	x	x	x	-	x	x	x	x	x	x	x
top grille	x	x	-	-	-	-	-	x	x	-	-	-	-	x
built-in valve insert	x	x	-	-	-	-	-	-	x	-	x	x	-	-

thermal output of the radiators

Thermal output of the radiators was determined in accordance with EN 442 based on laboratory measurements.
The temperatures of 75/65/20 °C were accepted as reference values.
Thermal output of the radiators for other values can be calculated with the following formula:

$$\phi = \phi_n \left[\frac{\Delta t}{\Delta t_n} \right]^n$$

where:
ϕ - thermal output of the radiator [W]
ϕ_n - thermal output of the radiator determined based on measurements in accordance with EN 442 [W]
Δt - logarithmic difference of temperatures [K]
Δt_n - logarithmic difference of temperatures 49.833 [K] calculated for reference temperatures 75/65/20 °C
n - exponent characteristic for a given type of radiator

The logarithmic difference of temperatures is calculated according to the following formula:

$$\Delta t = \frac{t_s - t_r}{\ln\left((t_s - t_i) / (t_r - t_i)\right)}$$

where:
t_s - supply water temperature [°C]
t_r - return water temperature [°C]
t_i - room temperature [°C]

KOS H

A horizontal decorative radiator with a flat front panel, gently finished edges and a uniquely designed top cover

- Connections : 2 x G ½ ” bottom, right side connectors (left side - available on request)
- Working pressure : 6 bar
- Maximal temperature : 99 °C
- Test pressure : 8 bar
- Colour : RAL 9016 white, other colours from the RAL colour chart are available on request
- Installation on brackets : mounting on hanging lugs welded on the rear panel of the radiator
- Accessories bundled with the radiator : two MCW-5 wall brackets including wall plugs and screws, factory installed thermostatic valve (on the right side) and air vent (on the left side).

KOS H

installation with the MCW-5 angle wall brackets

front view

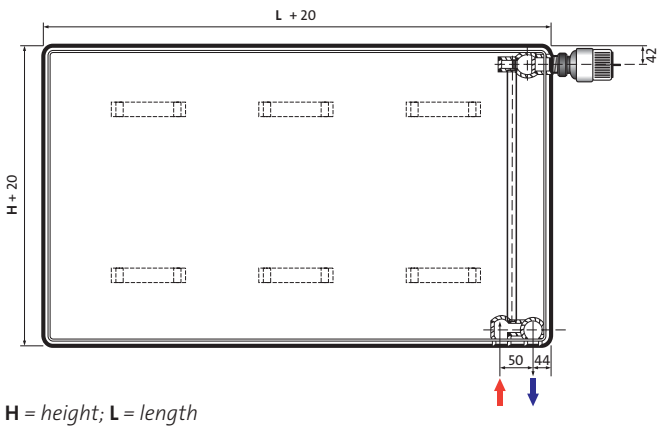

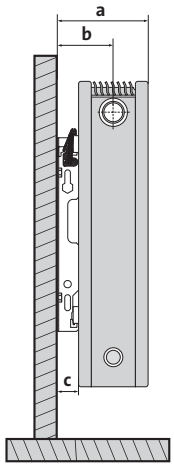

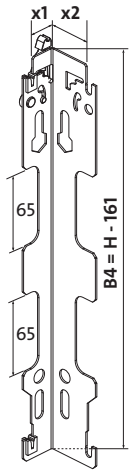

H = *height*; **L** = *length*

water volume and weight

water volume : l/m

type \ height	400	600	750	900
20	4.44	6.67	8.00	9.33
21	4.76	6.95	8.67	10.38
22	4.76	6.95	8.67	10.38
33	6.73	10.10	11.27	12.44

weight : kg/m

type \ height	400	600	750	900
20	22.83	32.50	40.19	47.89
21	26.48	37.43	46.67	56.29
22	29.24	42.67	53.52	64.38
33	42.70	62.38	77.19	92.00

number of brackets depending on the type and height of the radiator

type	height H	length L	2x	3x
20 / 21 / 22	400-600	< 2000	x	
		≥ 2000		x
20 / 21 / 22	750-900	< 1600	x	
		≥ 1600		x
33	400	< 2000	x	
		≥ 2000		x
33	600-900	< 1600	x	
		≥ 1600		x

	Shorter arm installation x1 = 24 mm	Longer arm installation x2 = 39.5 mm
type KOS H 20	**a** : 141 mm **b** : 84 mm **c** : 30 mm	**a** : 157 mm **b** : 100 mm **c** : 46 mm
type KOS H 21	**a** : 141 mm **b** : 84 mm **c** : 30 mm	**a** : 157 mm **b** : 100 mm **c** : 46 mm
type KOS H 22	**a** : 141 mm **b** : 84 mm **c** : 30 mm	**a** : 157 mm **b** : 100 mm **c** : 46 mm
type KOS H 33	**a** : 206 mm **b** : 84 mm **c** : 30 mm	**a** : 122 mm **b** : 100 mm **c** : 46 mm

recommended connections

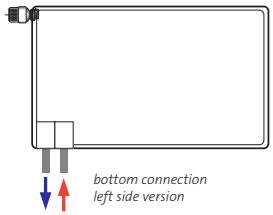

on request

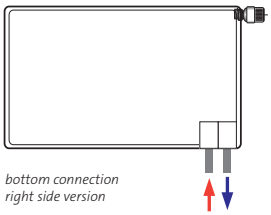

standard

↑ - *supply* ↓ - *return*

KOS H
type 20

KOS H 20

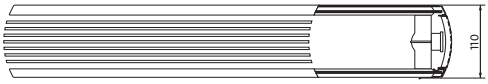

RADIATOR DESCRIPTION - AN EXAMPLE : **KOS H 20 600 1200 L**

name
type
height
length
L : only for the left side version
(no letter: standard, i.e. the right side version)

length [mm]	temperatures t_s / t_r / t_i [°C]	height [mm]			
		400	600	750	900
		[W]	[W]	[W]	[W]
450	**75/65/20**	**306**	**428**	**512**	**590**
	55/45/20	157	221	264	304
600	**75/65/20**	**407**	**571**	**683**	**786**
	55/45/20	209	295	352	405
750	**75/65/20**	**509**	**713**	**854**	**983**
	55/45/20	262	368	440	507
900	**75/65/20**	**611**	**856**	**1024**	**1179**
	55/45/20	314	442	528	608
1050	**75/65/20**	**713**	**999**	**1195**	**1376**
	55/45/20	367	515	616	709
1200	**75/65/20**	**815**	**1141**	**1366**	**1572**
	55/45/20	419	589	704	810
1350	**75/65/20**	**917**	**1284**	**1536**	**1769**
	55/45/20	471	663	792	912
1500	**75/65/20**	**1019**	**1427**	**1707**	**1965**
	55/45/20	524	736	880	1013
1650	**75/65/20**	**1120**	**1569**		
	55/45/20	576	810		
1800	**75/65/20**	**1222**	**1712**		
	55/45/20	628	883		
1950	**75/65/20**	**1324**	**1854**		
	55/45/20	681	957		

Thermal output of the radiators [W] in accordance with EN 442 for parameters 75/65/20 °C and 55/45/20 °C.

[W/m] 90/70/20	**852**	**1192**	**1427**	**1643**
exponent n	**1.2870**	**1.2801**	**1.2812**	**1.2823**

KOS H

type 21

RADIATOR DESCRIPTION - AN EXAMPLE : **KOS H 21 600 1200 L**

name
type
height
length
L : only for the left side version
(no letter: standard, i.e. the right side version)

KOS H 21

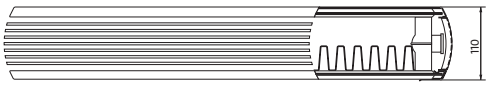

length [mm]	temperatures t_s / t_r / t_i [°C]	height [mm]			
		400	600	750	900
		[W]	[W]	[W]	[W]
450	**75/65/20**	**445**	**602**	**701**	**802**
	55/45/20	224	303	350	400
600	**75/65/20**	**593**	**802**	**934**	**1070**
	55/45/20	299	403	466	534
750	**75/65/20**	**742**	**1003**	**1168**	**1337**
	55/45/20	374	504	583	667
900	**75/65/20**	**890**	**1203**	**1401**	**1605**
	55/45/20	448	605	700	801
1050	**75/65/20**	**1038**	**1404**	**1635**	**1872**
	55/45/20	523	706	817	935
1200	**75/65/20**	**1187**	**1604**	**1868**	**2140**
	55/45/20	598	806	933	1068
1350	**75/65/20**	**1335**	**1805**	**2102**	**2407**
	55/45/20	673	907	1049	1202
1500	**75/65/20**	**1484**	**2006**	**2336**	**2675**
	55/45/20	748	1008	1167	1335
1650	**75/65/20**	**1632**	**2206**		
	55/45/20	822	1109		
1800	**75/65/20**	**1780**	**2407**		
	55/45/20	897	1210		
1950	**75/65/20**	**1929**	**2607**		
	55/45/20	972	1310		

Thermal output of the radiators [W] in accordance with EN 442 for parameters 75/65/20 °C and 55/45/20 °C.

[W/m] 90/70/20	**1249**	**1691**	**1973**	**2260**
exponent n	**1.3261**	**1.3311**	**1.3433**	**1.3440**

KOS H
type 22

RADIATOR DESCRIPTION - AN EXAMPLE : **KOS H 22 600 1200 L**

name
type
height
length
L : only for the left side version
(no letter: standard, i.e. the right side version)

KOS H 22

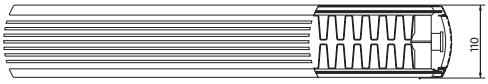

length [mm]	temperatures t_s / t_r / t_i [°C]	height [mm]			
		400	600	750	900
		[W]	[W]	[W]	[W]
450	**75/65/20**	**573**	**764**	**922**	**1014**
	55/45/20	288	378	456	494
600	**75/65/20**	**764**	**1018**	**1229**	**1352**
	55/45/20	384	503	608	659
750	**75/65/20**	**956**	**1273**	**1536**	**1690**
	55/45/20	480	629	760	824
900	**75/65/20**	**1147**	**1527**	**1843**	**2028**
	55/45/20	576	755	912	989
1050	**75/65/20**	**1338**	**1782**	**2150**	**2366**
	55/45/20	672	881	1064	1154
1200	**75/65/20**	**1529**	**2036**	**2458**	**2704**
	55/45/20	768	1006	1217	1318
1350	**75/65/20**	**1720**	**2291**	**2765**	**3042**
	55/45/20	864	1132	1369	1483
1500	**75/65/20**	**1911**	**2546**	**3072**	**3380**
	55/45/20	960	1258	1521	1648
1650	**75/65/20**	**2102**	**2800**		
	55/45/20	1056	1384		
1800	**75/65/20**	**2293**	**3055**		
	55/45/20	1152	1510		
1950	**75/65/20**	**2484**	**3309**		
	55/45/20	1248	1635		

Thermal output of the radiators [W] in accordance with EN 442 for parameters 75/65/20 °C and 55/45/20 °C.

[W/m] 90/70/20	**1612**	**2158**	**2603**	**2879**
exponent n	**1.3318**	**1.3635**	**1.3607**	**1.3897**

KOS H

type 33

RADIATOR DESCRIPTION - AN EXAMPLE : **KOS H 33 600 1200 L**

name
type
height
length
L : only for the left side version
(no letter: standard, i.e. the right side version)

KOS H 33

length [mm]	temperatures t_s / t_r / t_i [°C]	height [mm]			
		400	600	750	900
		[W]	[W]	[W]	[W]
450	**75/65/20**	**803**	**1114**	**1309**	**1471**
	55/45/20	405	553	646	722
600	**75/65/20**	**1070**	**1485**	**1745**	**1961**
	55/45/20	540	738	862	963
750	**75/65/20**	**1338**	**1856**	**2181**	**2451**
	55/45/20	676	922	1077	1204
900	**75/65/20**	**1606**	**2228**	**2617**	**2941**
	55/45/20	811	1107	1292	1444
1050	**75/65/20**	**1873**	**2599**	**3053**	**3431**
	55/45/20	946	1291	1508	1685
1200	**75/65/20**	**2141**	**2970**	**3490**	**3922**
	55/45/20	1081	1475	1724	1926
1350	**75/65/20**	**2408**	**3341**	**3926**	**4412**
	55/45/20	1216	1659	1939	2167
1500	**75/65/20**	**2676**	**3713**	**4362**	**4902**
	55/45/20	1351	1844	2154	2407
1650	**75/65/20**	**2944**	**4084**		
	55/45/20	1486	2029		
1800	**75/65/20**	**3211**	**4455**		
	55/45/20	1621	2213		
1950	**75/65/20**	**3479**	**4826**		
	55/45/20	1757	2397		

Thermal output of the radiators [W] in accordance with EN 442 for parameters 75/65/20 °C and 55/45/20 °C.

[W/m] 90/70/20	**2252**	**3143**	**3699**	**4165**
exponent n	**1.3222**	**1.3539**	**1.3649**	**1.3758**

FARO H

A horizontal decorative radiator with a softly profiled flat front panel, gently finished edges and a uniquely designed top cover.

- Connections : 2 x G ½ ” bottom, right side connectors (left side - available on request)
- Working pressure : 6 bar
- Maximal temperature : 99 °C
- Test pressure : 8 bar
- Colour : RAL 9016 white, other colours from the RAL colour chart are available on request
- Installation on brackets : mounting on hanging lugs welded on the rear panel of the radiator
- Accessories bundled with the radiator : two MCW-5 wall brackets including wall plugs and screws, factory installed thermostatic valve (on the right side) and air vent (on the left side).

FARO H

installation with the MCW-5 angle wall brackets

front view

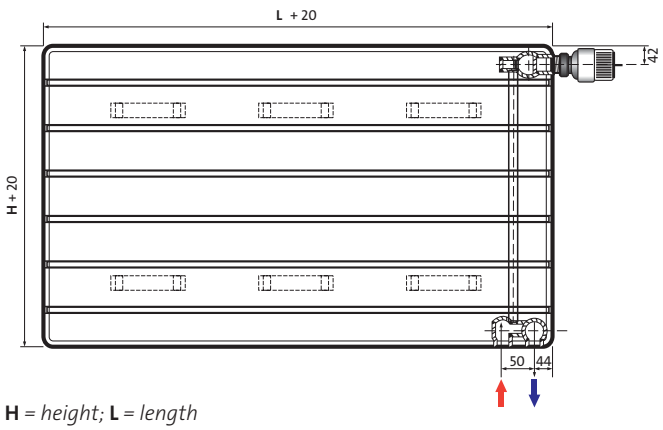

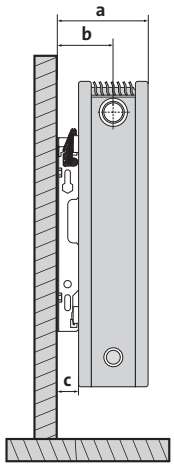

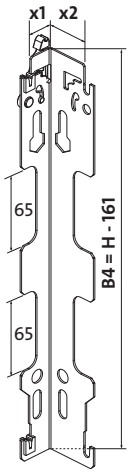

H = *height*; **L** = *length*

water volume and weight

water volume : l/m

type \ height	400	600	750	900
20	4.44	6.67	8.00	9.33
21	4.76	6.95	8.67	10.38
22	4.76	6.95	8.67	10.38
33	6.73	10.10	11.27	12.44

weight : kg/m

type \ height	400	600	750	900
20	22.83	32.50	40.19	47.89
21	26.48	37.43	46.67	56.29
22	29.24	42.67	53.52	64.38
33	42.70	62.38	77.19	92.00

number of brackets depending on the type and height of the radiator

type	height H	length L	2x	3x
20 / 21 / 22	400-600	< 2000	x	
		≥ 2000		x
20 / 21 / 22	750-900	< 1600	x	
		≥ 1600		x
33	400	< 2000	x	
		≥ 2000		x
33	600-900	< 1600	x	
		≥ 1600		x

	Shorter arm installation x1 = 24 mm	Longer arm installation x2 = 39.5 mm
type FARO H 20	**a** : 141 mm **b** : 84 mm **c** : 30 mm	**a** : 157 mm **b** : 100 mm **c** : 46 mm
type FARO H 21	**a** : 141 mm **b** : 84 mm **c** : 30 mm	**a** : 157 mm **b** : 100 mm **c** : 46 mm
type FARO H 22	**a** : 141 mm **b** : 84 mm **c** : 30 mm	**a** : 157 mm **b** : 100 mm **c** : 46 mm
type FARO H 33	**a** : 206 mm **b** : 84 mm **c** : 30 mm	**a** : 122 mm **b** : 100 mm **c** : 46 mm

recommended connections

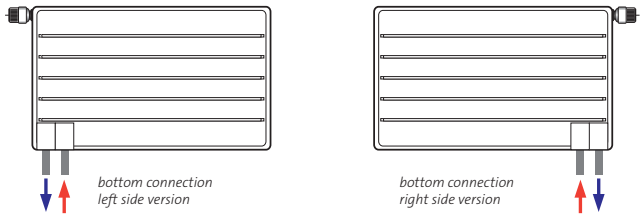

on request

standard

↑ - *supply* ↓ - *return*

FARO H
type 20

RADIATOR DESCRIPTION - AN EXAMPLE : **FARO H 20 600 1200 L**

name
type
height
length
L : only for the left side version
(no letter: standard, i.e. the right side version)

FARO H 20

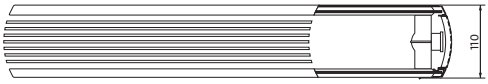

length [mm]	temperatures t_s / t_r / t_i [°C]	height [mm]			
		400	600	750	900
		[W]	[W]	[W]	[W]
450	**75/65/20**	**306**	**428**	**512**	**590**
	55/45/20	157	221	264	304
600	**75/65/20**	**407**	**571**	**683**	**786**
	55/45/20	209	295	352	405
750	**75/65/20**	**509**	**713**	**854**	**983**
	55/45/20	262	368	440	507
900	**75/65/20**	**611**	**856**	**1024**	**1179**
	55/45/20	314	442	528	608
1050	**75/65/20**	**713**	**999**	**1195**	**1376**
	55/45/20	367	515	616	709
1200	**75/65/20**	**815**	**1141**	**1366**	**1572**
	55/45/20	419	589	704	810
1350	**75/65/20**	**917**	**1284**	**1536**	**1769**
	55/45/20	471	663	792	912
1500	**75/65/20**	**1019**	**1427**	**1707**	**1965**
	55/45/20	524	736	880	1013
1650	**75/65/20**	**1120**	**1569**		
	55/45/20	576	810		
1800	**75/65/20**	**1222**	**1712**		
	55/45/20	628	883		
1950	**75/65/20**	**1324**	**1854**		
	55/45/20	681	957		

Thermal output of the radiators [W] in accordance with EN 442 for parameters 75/65/20 °C and 55/45/20 °C.

[W/m] 90/70/20	**852**	**1192**	**1427**	**1643**
exponent n	**1.2870**	**1.2801**	**1.2812**	**1.2823**

FARO H

type 21

RADIATOR DESCRIPTION - AN EXAMPLE : **FARO H 21 600 1200 L**

name
type
height
length
L : only for the left side version
(no letter: standard, i.e. the right side version)

FARO H 21

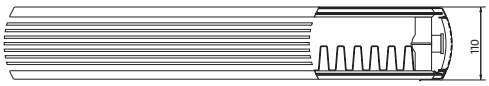

length [mm]	temperatures t_s / t_r / t_i [°C]	height [mm]			
		400	600	750	900
		[W]	[W]	[W]	[W]
450	**75/65/20**	**445**	**602**	**701**	**802**
	55/45/20	224	303	350	400
600	**75/65/20**	**593**	**802**	**934**	**1070**
	55/45/20	299	403	466	534
750	**75/65/20**	**742**	**1003**	**1168**	**1337**
	55/45/20	374	504	583	667
900	**75/65/20**	**890**	**1203**	**1401**	**1605**
	55/45/20	448	605	700	801
1050	**75/65/20**	**1038**	**1404**	**1635**	**1872**
	55/45/20	523	706	817	935
1200	**75/65/20**	**1187**	**1604**	**1868**	**2140**
	55/45/20	598	806	933	1068
1350	**75/65/20**	**1335**	**1805**	**2102**	**2407**
	55/45/20	673	907	1049	1202
1500	**75/65/20**	**1484**	**2006**	**2336**	**2675**
	55/45/20	748	1008	1167	1335
1650	**75/65/20**	**1632**	**2206**		
	55/45/20	822	1109		
1800	**75/65/20**	**1780**	**2407**		
	55/45/20	897	1210		
1950	**75/65/20**	**1929**	**2607**		
	55/45/20	972	1310		

Thermal output of the radiators [W] in accordance with EN 442 for parameters 75/65/20 °C and 55/45/20 °C.

[W/m] 90/70/20	**1249**	**1691**	**1973**	**2260**
exponent n	**1.3261**	**1.3311**	**1.3433**	**1.3440**

FARO H

type 22

RADIATOR DESCRIPTION - AN EXAMPLE : **FARO H 22 600 1200 L**

name
type
height
length
L : only for the left side version
(no letter: standard, i.e. the right side version)

FARO H 22

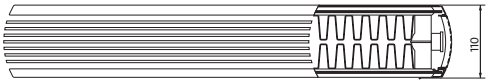

length [mm]	temperatures t_s / t_r / t_i [°C]	height [mm]			
		400	600	750	900
		[W]	[W]	[W]	[W]
450	**75/65/20**	**573**	**764**	**922**	**1014**
	55/45/20	288	378	456	494
600	**75/65/20**	**764**	**1018**	**1229**	**1352**
	55/45/20	384	503	608	659
750	**75/65/20**	**956**	**1273**	**1536**	**1690**
	55/45/20	480	629	760	824
900	**75/65/20**	**1147**	**1527**	**1843**	**2028**
	55/45/20	576	755	912	989
1050	**75/65/20**	**1338**	**1782**	**2150**	**2366**
	55/45/20	672	881	1064	1154
1200	**75/65/20**	**1529**	**2036**	**2458**	**2704**
	55/45/20	768	1006	1217	1318
1350	**75/65/20**	**1720**	**2291**	**2765**	**3042**
	55/45/20	864	1132	1369	1483
1500	**75/65/20**	**1911**	**2546**	**3072**	**3380**
	55/45/20	960	1258	1521	1648
1650	**75/65/20**	**2102**	**2800**		
	55/45/20	1056	1384		
1800	**75/65/20**	**2293**	**3055**		
	55/45/20	1152	1510		
1950	**75/65/20**	**2484**	**3309**		
	55/45/20	1248	1635		

Thermal output of the radiators [W] in accordance with EN 442 for parameters 75/65/20 °C and 55/45/20 °C.

[W/m] 90/70/20	**1612**	**2158**	**2603**	**2879**
exponent n	**1.3318**	**1.3635**	**1.3607**	**1.3897**

FARO H

type 33

RADIATOR DESCRIPTION - AN EXAMPLE : **FARO H 33 600 1200 L**

name
type
height
length
L : only for the left side version
(no letter: standard, i.e. the right side version)

FARO H 33

length [mm]	temperatures t_s / t_r / t_i [°C]	height [mm]			
		400	600	750	900
		[W]	[W]	[W]	[W]
450	**75/65/20**	**803**	**1114**	**1309**	**1471**
	55/45/20	405	553	646	722
600	**75/65/20**	**1070**	**1485**	**1745**	**1961**
	55/45/20	540	738	862	963
750	**75/65/20**	**1338**	**1856**	**2181**	**2451**
	55/45/20	676	922	1077	1204
900	**75/65/20**	**1606**	**2228**	**2617**	**2941**
	55/45/20	811	1107	1292	1444
1050	**75/65/20**	**1873**	**2599**	**3053**	**3431**
	55/45/20	946	1291	1508	1685
1200	**75/65/20**	**2141**	**2970**	**3490**	**3922**
	55/45/20	1081	1475	1724	1926
1350	**75/65/20**	**2408**	**3341**	**3926**	**4412**
	55/45/20	1216	1659	1939	2167
1500	**75/65/20**	**2676**	**3713**	**4362**	**4902**
	55/45/20	1351	1844	2154	2407
1650	**75/65/20**	**2944**	**4084**		
	55/45/20	1486	2029		
1800	**75/65/20**	**3211**	**4455**		
	55/45/20	1621	2213		
1950	**75/65/20**	**3479**	**4826**		
	55/45/20	1757	2397		

Thermal output of the radiators [W] in accordance with EN 442 for parameters 75/65/20 °C and 55/45/20 °C.

[W/m] 90/70/20	**2252**	**3143**	**3699**	**4165**
exponent n	**1.3222**	**1.3539**	**1.3649**	**1.3758**

KOS V

A vertical decorative radiator with a flat front panel, gently finished edges and side covers.

- Connections : 4 x G ½ ” bottom; 2 x G ½” top - for the air vent and plug installation
- Working pressure : 6 bar
- Maximal temperature : 99 °C
- Test pressure : 8 bar
- Colour : RAL 9016 white, other colours from the RAL colour chart are available on request
- Many connection possibilities
- Accessories bundled with the radiator : brackets, plugs, air vent.

KOS V

front view

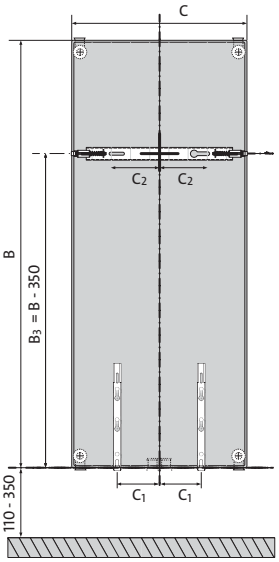

C	300	450	600	750
C_1	75	100	175	250
C_2	50	125	200	275

side views

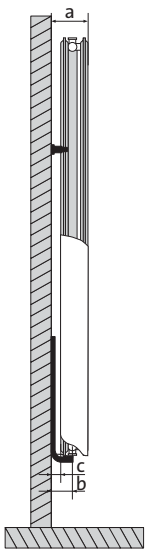

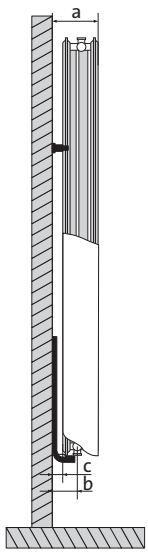

type KOS V 21

a : 111 mm
b : 67 mm
c : 27 mm

type KOS V 22

a : 136 mm
b : 67 mm
c : 27 mm

installation

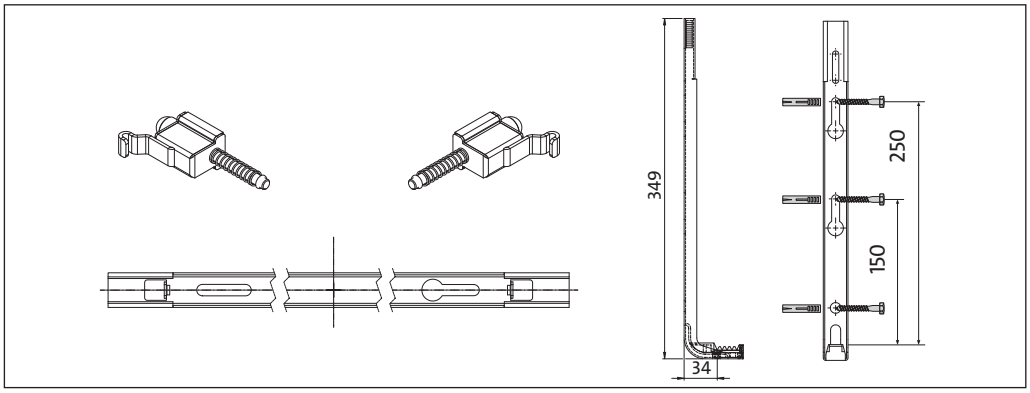

water volume and weight

water volume : l/m

type \ height	1800	1950	2100
21	21.47	24.13	25.47
22	21.73	23.47	25.33

weight : kg/m

type \ height	1800	1950	2100
21	100.27	109.33	117.07
22	111.60	123.73	130.93

recommended connections

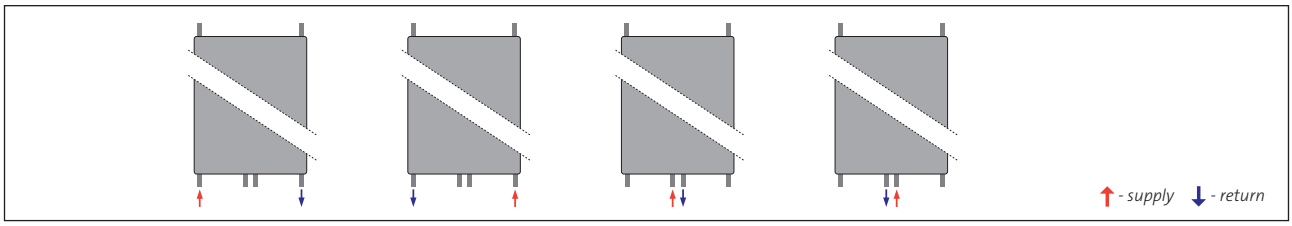

KOS V
type 21

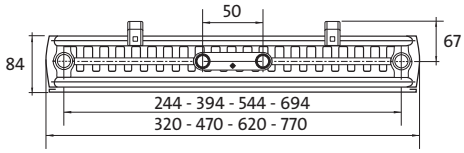

RADIATOR DESCRIPTION - AN EXAMPLE : **KOS V 21 1800 600**

name
type
height
width

width [mm]	temperatures t_s / t_r / t_i [°C]	height [mm] 1800 [W]	1950 [W]	2100 [W]
300	**75/65/20**	**886**	**936**	**978**
	55/45/20	448	472	491
450	**75/65/20**	**1329**	**1404**	**1467**
	55/45/20	672	709	737
600	**75/65/20**	**1772**	**1873**	**1957**
	55/45/20	896	945	983
750	**75/65/20**	**2216**	**2341**	**2446**
	55/45/20	1121	1181	1228

Thermal output of the radiators [W] in accordance with EN 442 for parameters 75/65/20 °C and 55/45/20 °C.

[W/m] 90/70/20	**3727**	**3942**	**4125**
exponent n	**1.3192**	**1.3231**	**1.3327**

KOS V INOX	width [mm]	height [mm]	exponent n	weight [kg]	water volume [l]	75/65/20	55/45/20
KOS V 21 1800 450 INOX	450	1800	1.3308	45.10	10.10	1183	595
KOS V 21 1950 600 INOX	600	1950	1.3600	64.20	14.30	1601	793
KOS V 21 2100 750 INOX	750	2100	1.3693	83.60	18.30	2095	1032

KOS V

type 22

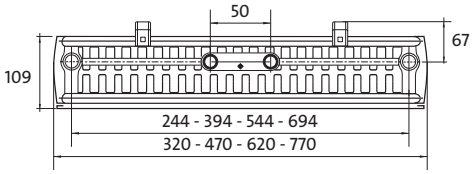

RADIATOR DESCRIPTION - AN EXAMPLE : **KOS V 22 1800 600**

name
type
height
width

For type 22 connections are asymmetric with respect to the radiator panels

width [mm]	temperatures t_s / t_r / t_i [°C]	height [mm]		
		1800	**1950**	**2100**
		[W]	[W]	[W]
300	**75/65/20**	**1046**	**1103**	**1161**
	55/45/20	524	528	583
450	**75/65/20**	**1569**	**1654**	**1742**
	55/45/20	785	792	874
600	**75/65/20**	**2092**	**2205**	**2323**
	55/45/20	1047	1055	1166
750	**75/65/20**	**2615**	**2756**	**2903**
	55/45/20	1309	1319	1457

Thermal output of the radiators [W] in accordance with EN 442 for parameters 75/65/20 °C and 55/45/20 °C.

[W/m] 90/70/20	**4415**	**4725**	**4898**
exponent n	**1.3387**	**1.4255**	**1.3343**

FARO V

A vertical decorative radiator with a softly profiled flat front panel, gently finished edges and side covers.

- Connections : 4 x G ½ ” bottom; 2 x G ½” top - for the air vent and plug installation
- Working pressure : 6 bar
- Maximal temperature : 99 °C
- Test pressure : 8 bar
- Colour : RAL 9016 white, other colours from the RAL colour chart are available on request
- Many connection possibilities
- Accessories bundled with the radiator : brackets, plugs, air vent.

FARO V

front view

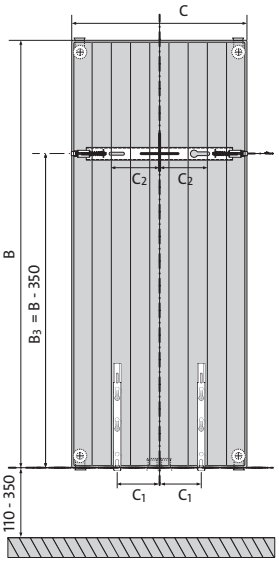

C	300	450	600	750
C_1	75	100	175	250
C_2	50	125	200	275

side views

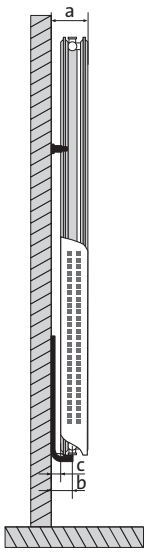

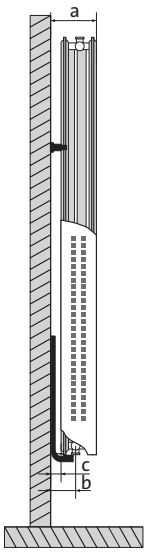

type FARO V 21

a : 111 mm
b : 67 mm
c : 27 mm

type FARO V 22

a : 136 mm
b : 67 mm
c : 27 mm

installation

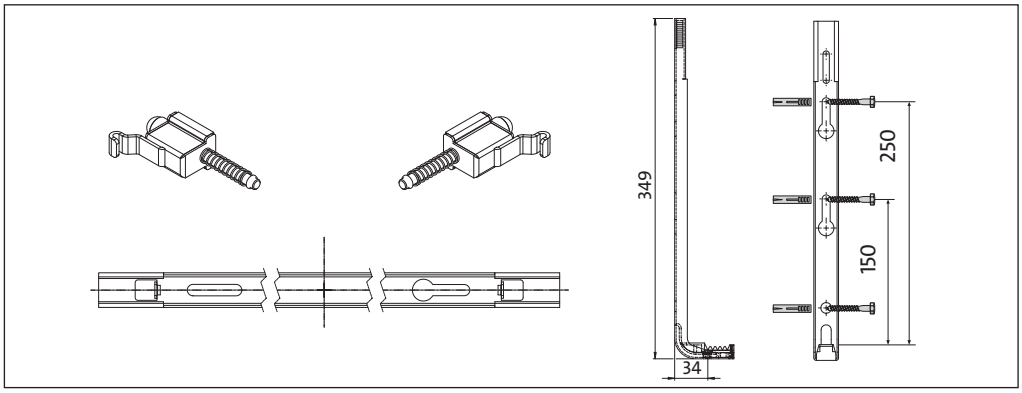

water volume and weight

water volume : l/m

type \ height	1800	1950	2100
21	21.47	24.13	25.47
22	21.73	23.47	25.33

weight : kg/m

type \ height	1800	1950	2100
21	100.27	109.33	117.07
22	111.60	123.73	130.93

recommended connections

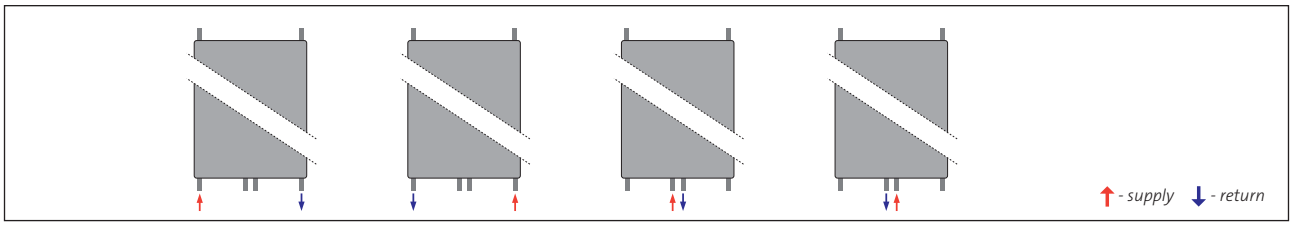

FARO V
type 21

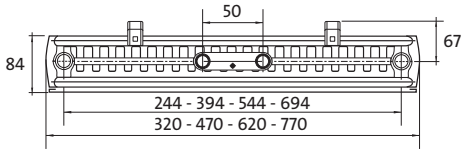

RADIATOR DESCRIPTION - AN EXAMPLE : **FARO V 21 1800 600**

name
type
height
width

width [mm]	temperatures t_s / t_r / t_i [°C]	height [mm] 1800 [W]	1950 [W]	2100 [W]
300	**75/65/20**	**886**	**936**	**978**
	55/45/20	448	472	491
450	**75/65/20**	**1329**	**1404**	**1467**
	55/45/20	672	709	737
600	**75/65/20**	**1772**	**1873**	**1957**
	55/45/20	896	945	983
750	**75/65/20**	**2216**	**2341**	**2446**
	55/45/20	1121	1181	1228

Thermal output of the radiators [W] in accordance with EN 442 for parameters 75/65/20 °C and 55/45/20 °C.

[W/m] 90/70/20	**3727**	**3942**	**4125**
exponent n	**1.3192**	**1.3231**	**1.3327**

FARO V INOX	width [mm]	height [mm]	exponent n	weight [kg]	water volume [l]	75/65/20	55/45/20
FARO V 21 1800 450 INOX	450	1800	1.3308	45.10	10.10	1183	595
FARO V 21 1950 600 INOX	600	1950	1.3600	64.20	14.30	1601	793
FARO V 21 2100 750 INOX	750	2100	1.3693	83.60	18.30	2095	1032

FARO V

type 22

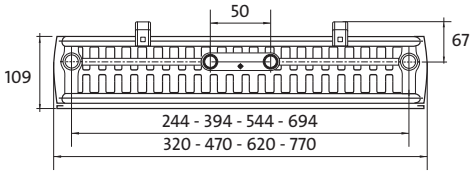

RADIATOR DESCRIPTION - AN EXAMPLE : **FARO V 22 1800 600**

name
type
height
width

For type 22 connections are asymmetric with respect to the radiator panels

width [mm]	temperatures t_s / t_r / t_i [°C]	height [mm]		
		1800	**1950**	**2100**
		[W]	[W]	[W]
300	**75/65/20**	**1046**	**1103**	**1161**
	55/45/20	524	528	583
450	**75/65/20**	**1569**	**1654**	**1742**
	55/45/20	785	792	874
600	**75/65/20**	**2092**	**2205**	**2323**
	55/45/20	1047	1055	1166
750	**75/65/20**	**2615**	**2756**	**2903**
	55/45/20	1309	1319	1457

Thermal output of the radiators [W] in accordance with EN 442 for parameters 75/65/20 °C and 55/45/20 °C.

[W/m] 90/70/20	**4415**	**4725**	**4898**
exponent n	**1.3387**	**1.4255**	**1.3343**

TINOS V

A vertical decorative radiator with a flat front panel overlapping heater sides at straight angles. Its modern and stylish design blends perfectly with the latest trends in heating technology.

- Connections : 4 x G 1/2” bottom; 2 x G 1/2” top - for the air vent and plug installation
- Working pressure : 6 bar
- Maximal temperature : 99 °C
- Test pressure : 8 bar
- Colour : RAL 9016 white, other colours from the RAL colour chart are available on request
- Many connection possibilities
- Accessories bundled with the radiato : brackets MCW-V, plugs, air vent.

recommended connections

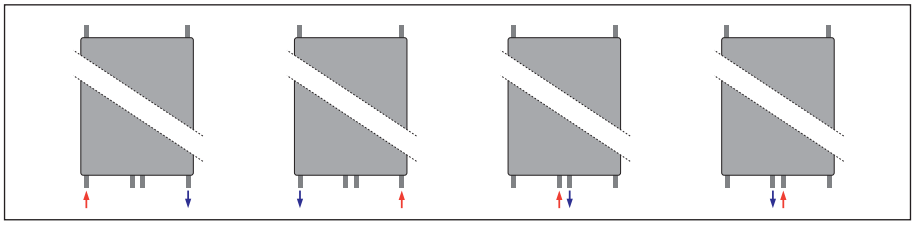

- supply *- return*

TINOS V

dimensions

type 11 (325)

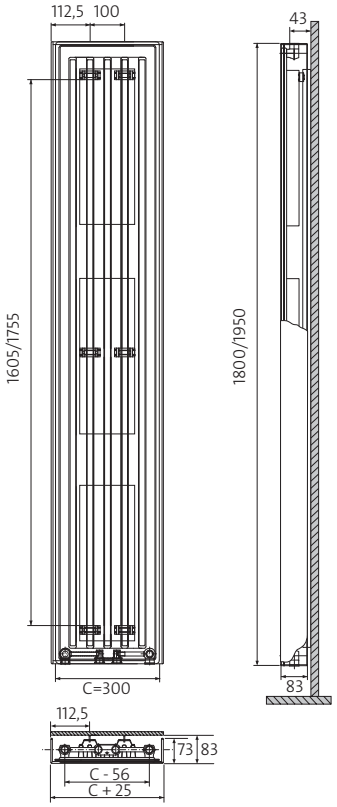

type 11 (475/625/775)

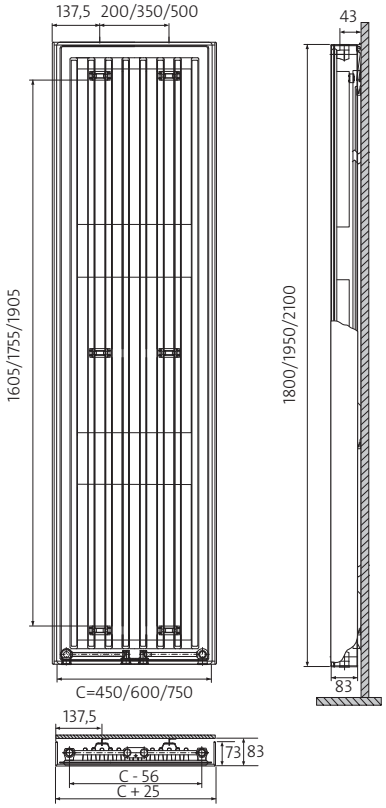

bracket MCW-V

type 21 (325)

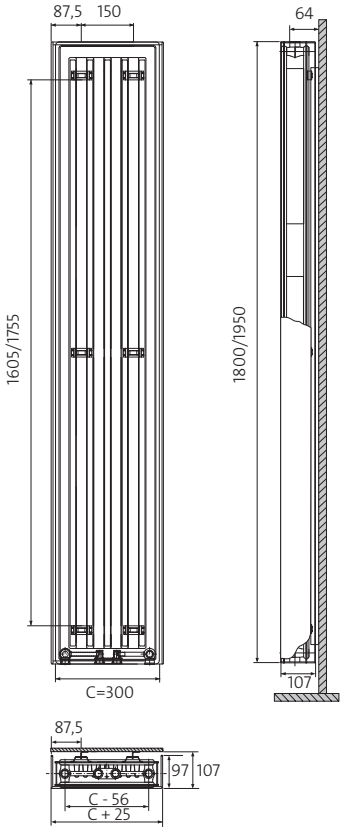

type 21 (475/625/775)

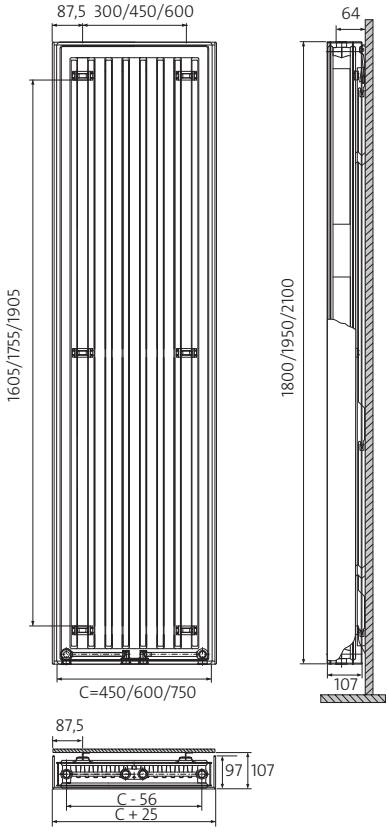

bracket MCW-V

Dimensions : mm

TINOS V
type 11

TINOS V 11

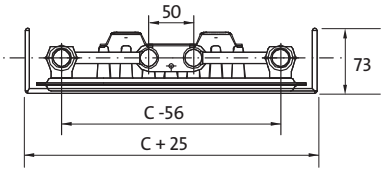

RADIATOR DESCRIPTION - AN EXAMPLE : **TINOS V 11 1800 325**

name
type
height
width

width [mm]	temperatures t_s / t_r / t_i [°C]	height [mm] 1800 [W]	1950 [W]	2100 [W]
325 (C=300)	**75/65/20** 55/45/20	**653** 339	**720** 382	
475 (C=450)	**75/65/20** 55/45/20	**976** 509	**1056** 549	
625 (C=600)	**75/65/20** 55/45/20	**1298** 678	**1393** 710	**1429** 752
775 (C=750)	**75/65/20** 55/45/20		**1729** 863	**1749** 915

Thermal output of the radiators [W] in accordance with EN 442 for parameters 75/65/20 °C and 55/45/20 °C.

exponent n for width: 325	**1.2810**	**1.2418**	
475	**1.2761**	**1.2811**	
625	**1.2711**	**1.3205**	**1.2575**
775		**1.3598**	**1.2685**

water volume and weight (type 11)

water volume : l/m

type \ height	1800	1950	2100
325	3.50	3.80	
475	5.25	5.47	
625	7.00	7.13	8.12
775		8.80	10.15

weight : kg/m

type \ height	1800	1950	2100
325	21.00	23.20	
475	30.37	33.88	
625	39.73	44.57	47.75
775		55.25	59.20

TINOS V

type 21

TINOS V 21

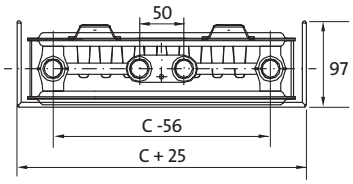

RADIATOR DESCRIPTION - AN EXAMPLE : **TINOS V 21 1800 325**

name
type
height
width

width [mm]	temperatures t_s / t_r / t_i [°C]	height [mm] 1800 [W]	1950 [W]	2100 [W]
325 (C=300)	**75/65/20** 55/45/20	**886** 452	**936** 476	
475 (C=450)	**75/65/20** 55/45/20	**1329** 677	**1405** 715	
625 (C=600)	**75/65/20** 55/45/20	**1772** 903	**1873** 953	**1957** 991
775 (C=750)	**75/65/20** 55/45/20		**2341** 1191	**2446** 1238

Thermal output of the radiators [W] in accordance with EN 442 for parameters 75/65/20 °C and 55/45/20 °C.

exponent n for width: 325	**1.3192**	**1.3231**	
475	**1.3192**	**1.3231**	
625	**1.3192**	**1.3231**	**1.3327**
775		**1.3231**	**1.3327**

water volume and weight (type 21)

water volume : l/m

type \ height	1800	1950	2100
325	6.44	7.24	
475	9.66	10.86	
625	12.88	14.48	15.28
775		18.10	19.10

weight : kg/m

type \ height	1800	1950	2100
325	30.08	32.80	
475	45.12	49.20	
625	60.16	65.60	70.24
775		82.00	87.80

PAROS V

A vertical decorative radiator with a flat front panel overlapping both heater sides with smooth curves. Its modern and stylish design reflects the latest trends in heating technology.

- Connections : 4 x G 1/2” bottom; 2 x G 1/2” top - for the air vent and plug installation
- Working pressure : 6 bar
- Maximal temperature : 99 °C
- Test pressure : 8 bar
- Colour : RAL 9016 white, other colours from the RAL colour chart are available on request
- Many connection possibilities
- Accessories bundled with the radiato : brackets MCW-V, plugs, air vent.

recommended connections

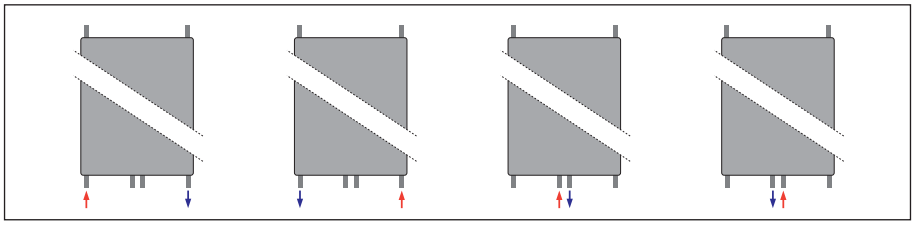

- supply *- return*

PAROS V

dimensions

type 11 (380)

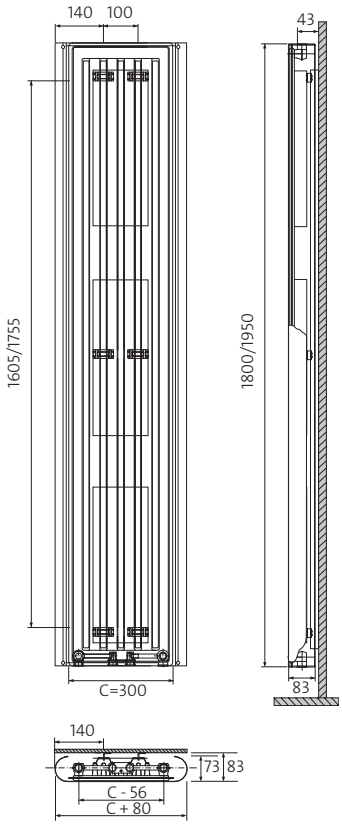

type 11 (530/680/830)

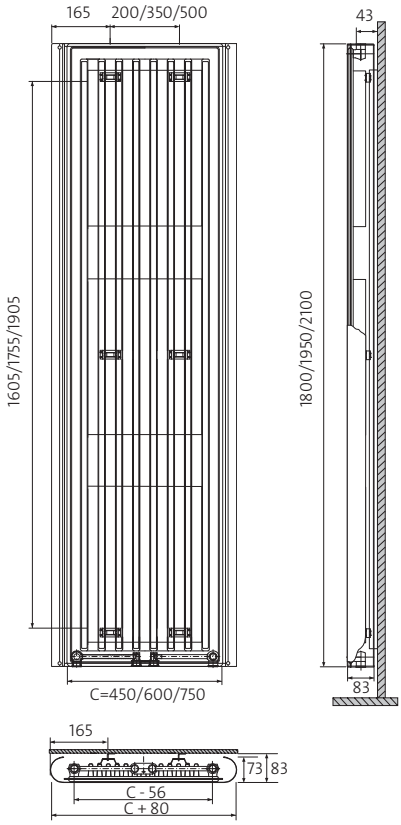

bracket
MCW-V

type 21 (405)

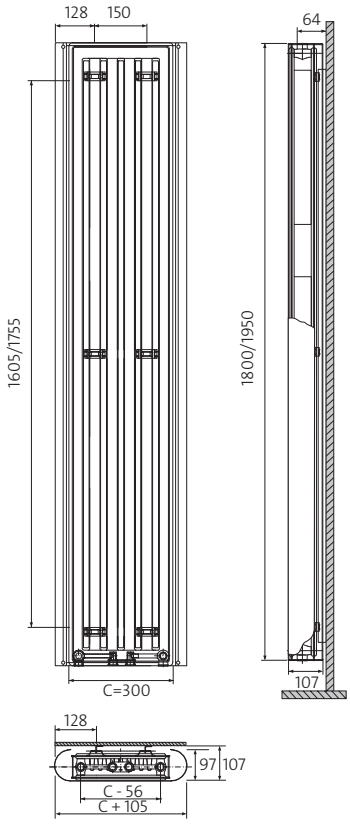

type 21 (555/705/855)

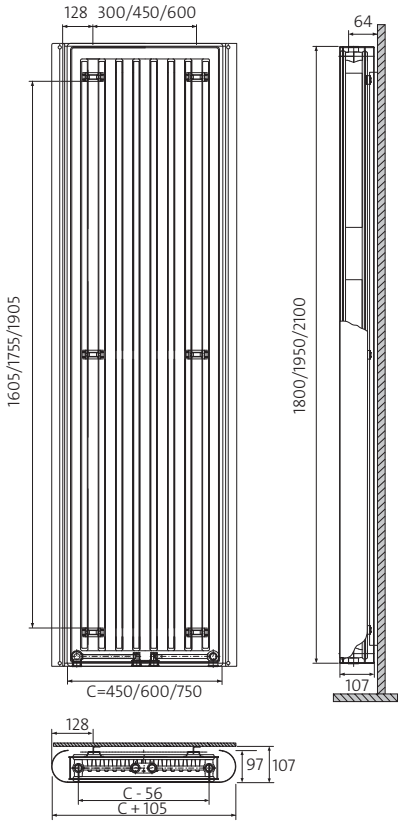

bracket
MCW-V

Dimensions : mm

PAROS V
type 11

PAROS V 11

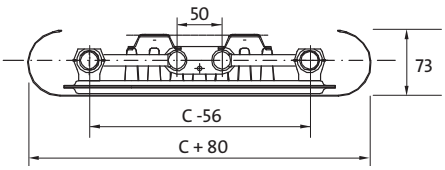

RADIATOR DESCRIPTION - AN EXAMPLE : **PAROS V 11 1800 380**

name
type
height
width

width [mm]	temperatures t_s / t_r / t_i [°C]	height [mm] 1800 [W]	1950 [W]	2100 [W]
380 (C=300)	**75/65/20** 55/45/20	**653** 339	**720** 382	
530 (C=450)	**75/65/20** 55/45/20	**976** 509	**1056** 549	
680 (C=600)	**75/65/20** 55/45/20	**1298** 678	**1393** 710	**1429** 752
830 (C=750)	**75/65/20** 55/45/20		**1729** 863	**1749** 915

Thermal output of the radiators [W] in accordance with EN 442 for parameters 75/65/20 °C and 55/45/20 °C.

exponent n for width: 380	**1.2810**	**1.2418**	
530	**1.2761**	**1.2811**	
680	**1.2711**	**1.3205**	**1.2575**
830		**1.3598**	**1.2685**

water volume and weight (type 11)

water volume : l/m

type \ height	1800	1950	2100
380	3.50	3.80	
530	5.25	5.47	
680	7.00	7.13	8.12
830		8.80	10.15

weight : kg/m

type \ height	1800	1950	2100
380	21.00	23.20	
530	30.37	33.88	
680	39.73	44.57	47.75
830		55.25	59.20

PAROS V

type 21

PAROS V 21

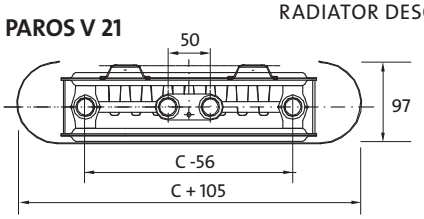

RADIATOR DESCRIPTION - AN EXAMPLE : **PAROS V 21 1800 405**

name
type
height
width

width [mm]	temperatures t_s / t_r / t_i [°C]	height [mm] 1800 [W]	1950 [W]	2100 [W]
405 (C=300)	**75/65/20** 55/45/20	**886** 452	**936** 476	
555 (C=450)	**75/65/20** 55/45/20	**1329** 677	**1405** 715	
705 (C=600)	**75/65/20** 55/45/20	**1772** 903	**1873** 953	**1957** 991
855 (C=750)	**75/65/20** 55/45/20		**2341** 1191	**2446** 1238

Thermal output of the radiators [W] in accordance with EN 442 for parameters 75/65/20 °C and 55/45/20 °C.

exponent n for width: 405	**1.3192**	**1.3231**	
555	**1.3192**	**1.3231**	
705	**1.3192**	**1.3231**	**1.3327**
855		**1.3231**	**1.3327**

water volume and weight (type 21)

water volume : l/m

type \ height	1800	1950	2100
405	6.44	7.24	
555	9.66	10.86	
705	12.88	14.48	15.28
855		18.10	19.10

weight : kg/m

type \ height	1800	1950	2100
405	30.08	32.80	
555	45.12	49.20	
705	60.16	65.60	70.24
855		82.00	87.80

ARRAN

A decorative vertical radiator for special purposes. A combination of minimalist form and high practicality. Its low installation depth makes it utterly discreet. Its simple shapes can be enriched with accessory railing hangers. The drying option widens the application scope to include kitchens. The rich colour range of the Purmo colour palette has been extended to include a few ready-made colour sets for the front panel and the surrounding frame.

technical specifications

- Connections : 4 x G ½ " bottom, 2 x G ½ " top connectors – for the installation of a plug and an air vent.
- Working pressure : 6 bar
- Maximal temperature : 99 °C
- Test pressure : 8 bar

- Colour : RAL 9016 white, other colours from the RAL colour chart are available on request.
- Accessories bundled with the radiator : brackets, plug, air vent.

ARRAN

front view

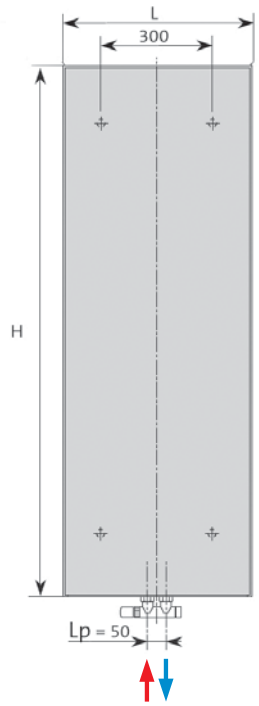

NOTE: The price of the radiator does not include the connection valve block!! The block is not included in scope of delivery for this radiator.

side view

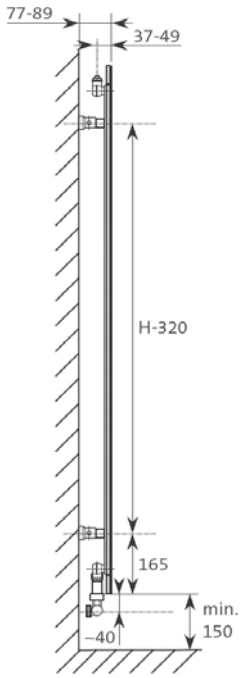

top view

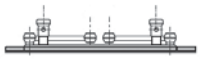

H = *height*
L = *width*
Hz = *vertical spacing of brackets*
Lz = *horizontal spacing of brackets*
Lp = *spacing of connectors*

dimensions in mm

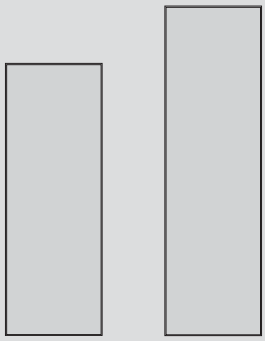

ARA 14 .. **ARA 17 ..**

A standard version without a hanger and a valve. The front panel and the surrounding frame in colour RAL9016.

type	output [W]		H	L	brackets		Lp	water volume	weight	order code
	75/65/20	55/45/20	[mm]	[mm]	Hz [mm]	Lz [mm]	[mm]	[dm³]	[kg]	
ARA 1405	587	307	1430	514	1110	300	50	3.86	29.27	F17E0140050003XC0000
ARA 1705	710	373	1730	514	1410	300	50	4.85	34.20	F17E0170050003XC0000

Thermal output of the radiators [W] in accordance with EN 442 for parameters 75/65/20 °C and 55/45/20 °C.

NARBONNE

Narbonne radiators are composed of several interconnected profiled steel heating elements of rectangular cross sections. Each radiator has four connection openings with G ½" male threads that enable either left-hand side or right-hand side connection. Narbonne radiators have two side covers and a top masking grille. Up to and including the height of 286 mm, Narbonne radiators are delivered without hangers, while models 358 mm to 790 mm high have, as a standard, installation hangers welded on the back of the radiator.
Narbonne WVO radiators up to 286 mm high, type NA-S 22, 34, and 47, are equipped with a protective screen that reduces emission of heat towards the external partition located behind the radiator.

technical specification

- Material : high quality steel profiles of a rectangular cross section, dimensions: 70 x 11 x 1.5 mm (high pressure version: 70 x 11 x 2.0 mm)
- Height : 70, 142, 214, 286, 358, 430, 502, 574, 646, 790 mm
- Length : from 500 up to 4000 mm
- Depth : from 68 up to 339 mm
- Connections : 4 x G ½", side connectors
- Max. operating pressure : 5 bar for the standard version, 8 bar for the high pressure version
- Max. temperature : 110°C
- Colour : RAL 9016, other RAL colours available, surcharge at each order
- Brackets : wall or floor – ordered separately, at Client's preference
- Accessories : plug and air vent, included in the radiator's kit

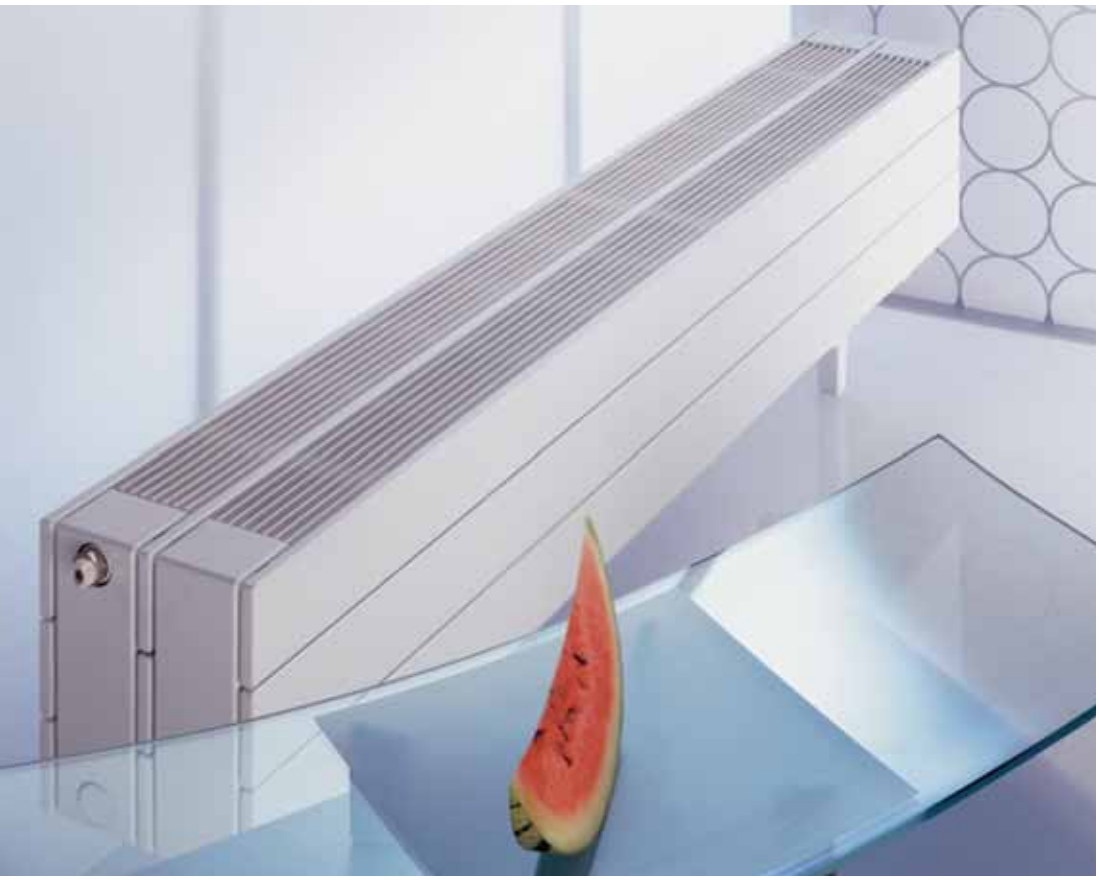

NARBONNE

height from 70 up to 286 mm

front view

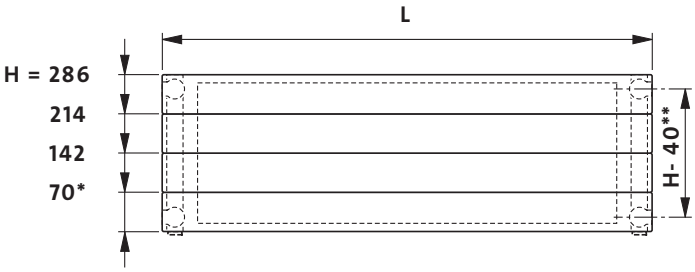

* only cross connection possible
** not applicable to the 70 mm-high radiator
H - height [mm]
L - length [mm]

example side views

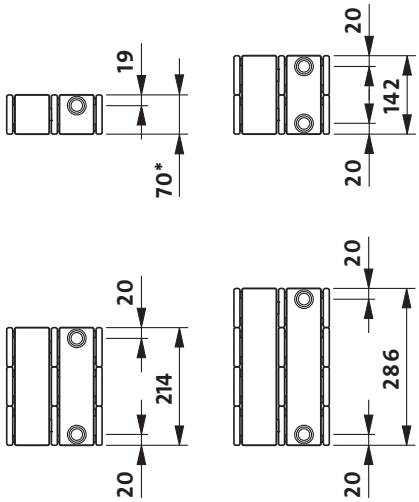

top view

NA 11

NA 22

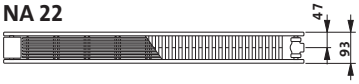

NA 23

NA 34

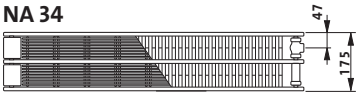

NA 35

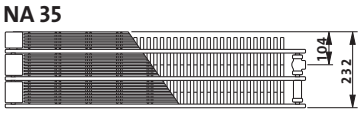

NA 46

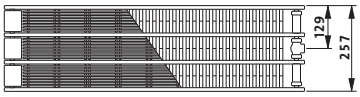

NA 58

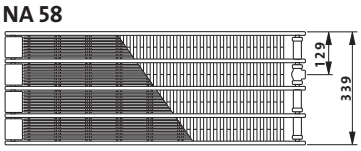

type	NA 11	NA 22	NA 23	NA 34	NA 35	NA 46	NA 58
height [mm]	214; 286	70; 142; 214; 286	70; 142; 214; 286	70; 142; 214; 286	70; 142; 214; 286	70; 142; 214; 286	70; 142; 214; 286
length [mm]	500 - 4000 mm (*depending on the type)						
step	100 mm (200 mm from the length of 1400 mm)						

NARBONNE

height from 70 up to 286 mm
a version with a protective screen

front view

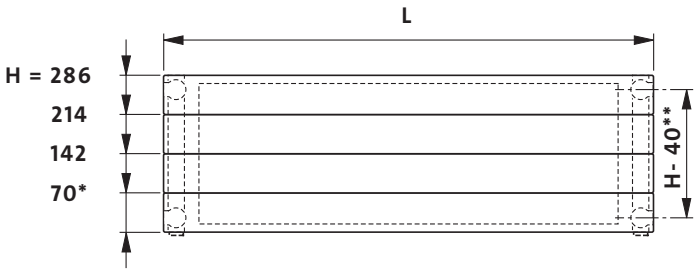

* only cross connection possible
** not applicable to the 70 mm-high radiator
H - height [mm]
L - length [mm]

example side views

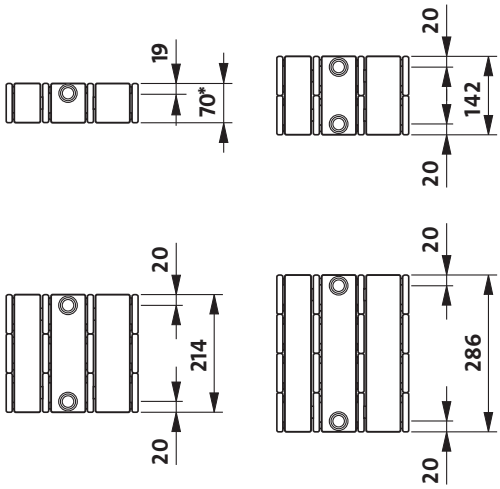

top view

NA-S 22

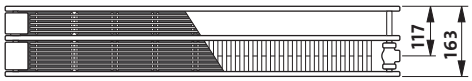

NA-S 34

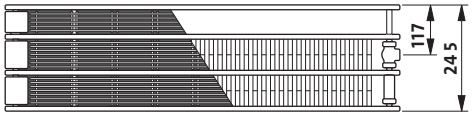

NA-S 47

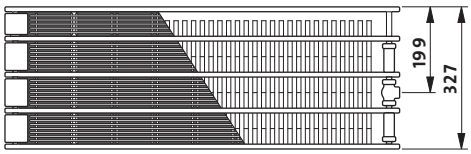

Radiators in the WVO version have a waterless protective screen welded to their backs; as a result of convection between the radiator and the protective screen, a large part of heat that would otherwise be waster returns to the room.

type	NA-S 22	NA-S 34	NA-S 47
height [mm]	70; 142; 214; 286	70; 142; 214; 286	70; 142; 214; 286
length [mm]	500 - 4000 mm (*in the case of NA-S 47 up to 2800 mm)		
step	100 mm (200 mm from the length of 1400 mm)		

NARBONNE

height from 358 up to 790 mm

front view

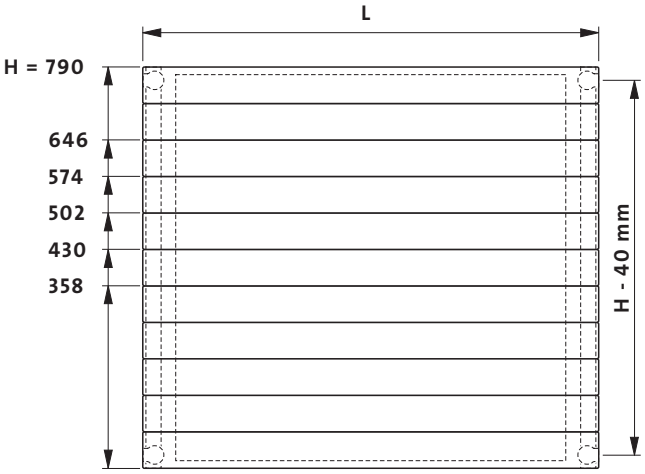

H - height [mm]
L - length [mm]

example side views

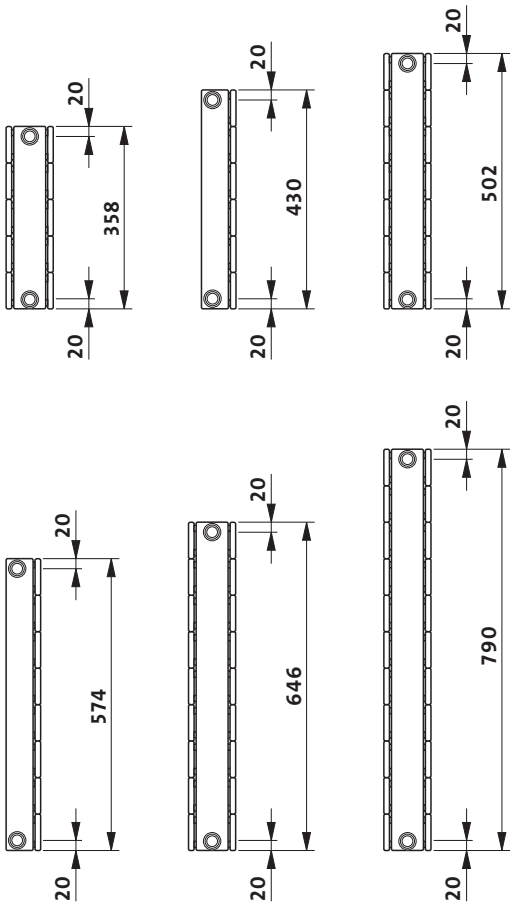

top view

NA 10

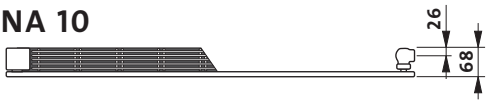

NA 22

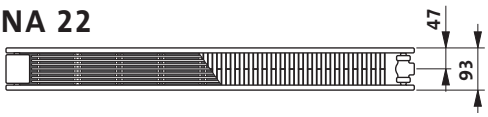

NA 11

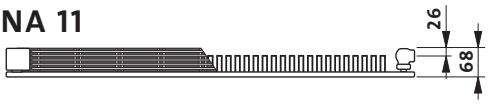

type	NA 10	NA 11	NA 22
height [mm]	358; 430; 502; 574; 646; 790	358; 430; 502; 574; 646; 790	358; 430; 502; 574; 646; 790
length [mm]	500 - 4000 mm (height 790 mm - up to 3000 mm)		
step	100 mm (200 mm from the length of 1400 mm)		

NARBONNE

weight and water volume

weight : kg/m

type	height [mm]									
	70	142	214	286	358	430	502	574	646	790
NA 10	-	-	-	-	11.91	14.04	16.17	18.29	20.43	24.68
NA 11	-	-	11.14	14.51	16.71	19.85	22.99	26.15	29.29	33.55
NA 22	7.34	13.97	20.59	27.23	30.89	36.93	42.96	49.01	55.05	63.06
NA-S 22	10.53	19.43	28.34	37.24	-	-	-	-	-	-
NA 23	9.20	17.02	24.84	32.66	-	-	-	-	-	-
NA 34	12.68	23.93	35.18	46.42	-	-	-	-	-	-
NA-S 34	15.87	29.39	42.92	56.44	-	-	-	-	-	-
NA 35	14.54	26.98	39.42	51.86	-	-	-	-	-	-
NA 46	18.02	33.89	49.76	65.62	-	-	-	-	-	-
NA-S 47	22.04	41.27	60.50	79.74	-	-	-	-	-	-
NA 58	23.36	43.85	64.34	85.82	-	-	-	-	-	-

water volume : l/m

type	height [mm]									
	70	142	214	286	358	430	502	574	646	790
NA 10	-	-	-	-	2.76	3.33	3.87	4.44	4.99	6.12
NA 11	-	-	1.67	2.22	2.78	3.33	3.87	4.44	4.99	6.12
NA 22	1.10	2.18	3.34	4.44	5.55	6.66	7.77	8.88	9.99	12.22
NA-S 22	1.10	2.18	3.34	4.44	-	-	-	-	-	-
NA 23	1.10	2.18	3.34	4.44	-	-	-	-	-	-
NA 34	1.68	3.33	4.99	6.66	-	-	-	-	-	-
NA-S 34	1.68	3.33	4.99	6.66	-	-	-	-	-	-
NA 35	1.69	3.33	4.99	6.66	-	-	-	-	-	-
NA 46	2.26	4.53	6.79	9.06	-	-	-	-	-	-
NA-S 47	2.26	4.53	6.79	9.06	-	-	-	-	-	-
NA 58	2.83	5.68	8.52	11.36	-	-	-	-	-	-

NARBONNE

RADIATOR DESCRIPTION - AN EXAMPLE : **NARBONNE 11 21 1600**

name
type
height
length

depth [mm]		68 mm			
length [mm]	height [mm]	70	142	214	286
	$t_z / t_p / t_i$	NA 11	NA 11	NA 11	NA 11
		[W]	[W]	[W]	[W]
500	**75/65/20 °C** 55/45/20 °C			**232** 118	**289** 146
600	**75/65/20 °C** 55/45/20 °C			**278** 142	**346** 175
700	**75/65/20 °C** 55/45/20 °C			**325** 166	**404** 204
800	**75/65/20 °C** 55/45/20 °C			**371** 189	**462** 233
900	**75/65/20 °C** 55/45/20 °C			**418** 213	**519** 262
1000	**75/65/20 °C** 55/45/20 °C			**464** 236	**577** 291
1100	**75/65/20 °C** 55/45/20 °C			**510** 260	**635** 320
1200	**75/65/20 °C** 55/45/20 °C			**557** 284	**692** 349
1300	**75/65/20 °C** 55/45/20 °C			**603** 307	**750** 378
1400	**75/65/20 °C** 55/45/20 °C			**650** 331	**808** 408
1600	**75/65/20 °C** 55/45/20 °C			**742** 378	**923** 466
1800	**75/65/20 °C** 55/45/20 °C			**835** 425	**1039** 524
2000	**75/65/20 °C** 55/45/20 °C			**928** 473	**1154** 582
2200	**75/65/20 °C** 55/45/20 °C			**1021** 520	**1269** 640
2400	**75/65/20 °C** 55/45/20 °C			**1114** 568	**1385** 699
2600	**75/65/20 °C** 55/45/20 °C			**1206** 614	**1500** 757
2800	**75/65/20 °C** 55/45/20 °C			**1299** 662	**1616** 815
3000	**75/65/20 °C** 55/45/20 °C			**1392** 709	**1731** 873
3200	**75/65/20 °C** 55/45/20 °C			**1485** 757	**1846** 931
3400	**75/65/20 °C** 55/45/20 °C			**1578** 804	**1962** 990
3600	**75/65/20 °C** 55/45/20 °C			**1670** 851	**2077** 1048
3800	**75/65/20 °C** 55/45/20 °C			**1763** 898	**2193** 1106
4000	**75/65/20 °C** 55/45/20 °C			**1856** 946	**2308** 1164

Thermal output of the radiators [W] in accordance with EN 442 for parameters 75/65/20 °C and 55/45/20 °C.

exponent n	-	-	**1.32**	**1.34**

NARBONNE

RADIATOR DESCRIPTION - AN EXAMPLE : **NARBONNE 22 70 1600**

name
type
height
length

depth [mm]		93 mm			
length [mm]	height [mm]	70	142	214	286
	$t_z / t_p / t_i$	NA 22	NA 22	NA 22	NA 22
		[W]	[W]	[W]	[W]
500	**75/65/20 °C**	**212**	**321**	**419**	**516**
	55/45/20 °C	111	165	211	255
600	**75/65/20 °C**	**254**	**385**	**503**	**619**
	55/45/20 °C	133	198	254	306
700	**75/65/20 °C**	**297**	**449**	**587**	**722**
	55/45/20 °C	155	231	296	357
800	**75/65/20 °C**	**339**	**513**	**670**	**826**
	55/45/20 °C	177	264	338	408
900	**75/65/20 °C**	**382**	**577**	**754**	**929**
	55/45/20 °C	200	297	380	459
1000	**75/65/20 °C**	**424**	**641**	**838**	**1032**
	55/45/20 °C	222	330	423	510
1100	**75/65/20 °C**	**466**	**705**	**922**	**1135**
	55/45/20 °C	244	363	465	561
1200	**75/65/20 °C**	**509**	**769**	**1006**	**1238**
	55/45/20 °C	266	396	507	612
1300	**75/65/20 °C**	**551**	**833**	**1089**	**1342**
	55/45/20 °C	288	429	549	663
1400	**75/65/20 °C**	**594**	**897**	**1173**	**1445**
	55/45/20 °C	310	462	592	714
1600	**75/65/20 °C**	**678**	**1026**	**1341**	**1651**
	55/45/20 °C	354	528	676	816
1800	**75/65/20 °C**	**763**	**1154**	**1508**	**1858**
	55/45/20 °C	399	594	761	918
2000	**75/65/20 °C**	**848**	**1282**	**1676**	**2064**
	55/45/20 °C	443	660	845	1020
2200	**75/65/20 °C**	**933**	**1410**	**1844**	**2270**
	55/45/20 °C	488	726	930	1122
2400	**75/65/20 °C**	**1018**	**1538**	**2011**	**2477**
	55/45/20 °C	532	792	1014	1224
2600	**75/65/20 °C**	**1102**	**1667**	**2179**	**2683**
	55/45/20 °C	576	858	1099	1326
2800	**75/65/20 °C**	**1187**	**1795**	**2346**	**2890**
	55/45/20 °C	620	924	1183	1428
3000	**75/65/20 °C**	**1272**	**1923**	**2514**	**3096**
	55/45/20 °C	665	990	1268	1530
3200	**75/65/20 °C**	**1357**	**2051**	**2682**	**3302**
	55/45/20 °C	709	1056	1353	1632
3400	**75/65/20 °C**	**1442**	**2179**	**2849**	**3509**
	55/45/20 °C	754	1122	1437	1734
3600	**75/65/20 °C**	**1526**	**2308**	**3017**	**3715**
	55/45/20 °C	798	1188	1522	1836
3800	**75/65/20 °C**	**1611**	**2436**	**3184**	**3922**
	55/45/20 °C	842	1254	1606	1938
4000	**75/65/20 °C**	**1696**	**2564**	**3352**	**4128**
	55/45/20 °C	886	1320	1691	2040

Thermal output of the radiators [W] in accordance with EN 442 for parameters 75/65/20 °C and 55/45/20 °C.

exponent n	**1.27**	**1.30**	**1.34**	**1.38**

NARBONNE

RADIATOR DESCRIPTION - AN EXAMPLE : **NARBONNE 22 70 1600**

name
type
height
length

depth [mm]		163 mm 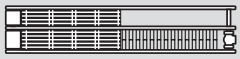			
length [mm]	height [mm]	70	142	214	286
	$t_z / t_p / t_i$	NA-S 22	NA-S 22	NA-S 22	NA-S 22
		[W]	[W]	[W]	[W]
500	**75/65/20 °C**	**212**	**321**	**419**	**516**
	55/45/20 °C	111	165	211	255
600	**75/65/20 °C**	**254**	**385**	**503**	**619**
	55/45/20 °C	133	198	254	306
700	**75/65/20 °C**	**297**	**449**	**587**	**722**
	55/45/20 °C	155	231	296	357
800	**75/65/20 °C**	**339**	**513**	**670**	**826**
	55/45/20 °C	177	264	338	408
900	**75/65/20 °C**	**382**	**577**	**754**	**929**
	55/45/20 °C	200	297	380	459
1000	**75/65/20 °C**	**424**	**641**	**838**	**1032**
	55/45/20 °C	222	330	423	510
1100	**75/65/20 °C**	**466**	**705**	**922**	**1135**
	55/45/20 °C	244	363	465	561
1200	**75/65/20 °C**	**509**	**769**	**1006**	**1238**
	55/45/20 °C	266	396	507	612
1300	**75/65/20 °C**	**551**	**833**	**1089**	**1342**
	55/45/20 °C	288	429	549	663
1400	**75/65/20 °C**	**594**	**897**	**1173**	**1445**
	55/45/20 °C	310	462	592	714
1600	**75/65/20 °C**	**678**	**1026**	**1341**	**1651**
	55/45/20 °C	354	528	676	816
1800	**75/65/20 °C**	**763**	**1154**	**1508**	**1858**
	55/45/20 °C	399	594	761	918
2000	**75/65/20 °C**	**848**	**1282**	**1676**	**2064**
	55/45/20 °C	443	660	845	1020
2200	**75/65/20 °C**	**933**	**1410**	**1844**	**2270**
	55/45/20 °C	488	726	930	1122
2400	**75/65/20 °C**	**1018**	**1538**	**2011**	**2477**
	55/45/20 °C	532	792	1014	1224
2600	**75/65/20 °C**	**1102**	**1667**	**2179**	**2683**
	55/45/20 °C	576	858	1099	1326
2800	**75/65/20 °C**	**1187**	**1795**	**2346**	**2890**
	55/45/20 °C	620	924	1183	1428
3000	**75/65/20 °C**	**1272**	**1923**	**2514**	**3096**
	55/45/20 °C	665	990	1268	1530
3200	**75/65/20 °C**	**1357**	**2051**	**2682**	**3302**
	55/45/20 °C	709	1056	1353	1632
3400	**75/65/20 °C**	**1442**	**2179**	**2849**	**3509**
	55/45/20 °C	754	1122	1437	1734
3600	**75/65/20 °C**	**1526**	**2308**	**3017**	**3715**
	55/45/20 °C	798	1188	1522	1836
3800	**75/65/20 °C**	**1611**	**2436**	**3184**	**3922**
	55/45/20 °C	842	1254	1606	1938
4000	**75/65/20 °C**	**1696**	**2564**	**3352**	**4128**
	55/45/20 °C	886	1320	1691	2040

Thermal output of the radiators [W] in accordance with EN 442 for parameters 75/65/20 °C and 55/45/20 °C.

exponent n	**1.27**	**1.30**	**1.34**	**1.38**

NARBONNE

RADIATOR DESCRIPTION - AN EXAMPLE : **NARBONNE 23 70 1600**

name
type
height
length

depth [mm]		150 mm 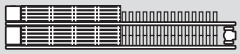			
length [mm]	height [mm]	70	142	214	286
	$t_z / t_p / t_i$	NA 23	NA 23	NA 23	NA 23
		[W]	[W]	[W]	[W]
500	**75/65/20 °C**	**262**	**399**	**518**	**631**
	55/45/20 °C	138	205	261	312
600	**75/65/20 °C**	**314**	**478**	**621**	**757**
	55/45/20 °C	165	246	313	374
700	**75/65/20 °C**	**367**	**558**	**725**	**883**
	55/45/20 °C	193	287	366	436
800	**75/65/20 °C**	**419**	**638**	**828**	**1009**
	55/45/20 °C	220	328	418	499
900	**75/65/20 °C**	**472**	**717**	**932**	**1135**
	55/45/20 °C	248	369	470	561
1000	**75/65/20 °C**	**524**	**797**	**1035**	**1261**
	55/45/20 °C	275	410	522	623
1100	**75/65/20 °C**	**576**	**877**	**1139**	**1387**
	55/45/20 °C	303	451	574	685
1200	**75/65/20 °C**	**629**	**956**	**1242**	**1513**
	55/45/20 °C	330	492	626	748
1300	**75/65/20 °C**	**681**	**1036**	**1346**	**1639**
	55/45/20 °C	358	533	679	810
1400	**75/65/20 °C**	**734**	**1116**	**1449**	**1765**
	55/45/20 °C	386	574	731	872
1600	**75/65/20 °C**	**838**	**1275**	**1656**	**2018**
	55/45/20 °C	440	656	835	997
1800	**75/65/20 °C**	**943**	**1435**	**1863**	**2270**
	55/45/20 °C	495	739	940	1122
2000	**75/65/20 °C**	**1048**	**1594**	**2070**	**2522**
	55/45/20 °C	551	821	1044	1246
2200	**75/65/20 °C**	**1153**	**1753**	**2277**	**2774**
	55/45/20 °C	606	902	1148	1371
2400	**75/65/20 °C**	**1258**	**1913**	**2484**	**3026**
	55/45/20 °C	661	985	1253	1495
2600	**75/65/20 °C**	**1362**	**2072**	**2691**	**3279**
	55/45/20 °C	716	1067	1357	1620
2800	**75/65/20 °C**	**1467**	**2232**	**2898**	**3531**
	55/45/20 °C	771	1149	1462	1745
3000	**75/65/20 °C**	**1572**	**2391**	**3105**	**3783**
	55/45/20 °C	826	1231	1566	1869
3200	**75/65/20 °C**	**1677**	**2550**	**3312**	**4035**
	55/45/20 °C	881	1313	1670	1994
3400	**75/65/20 °C**	**1782**	**2710**	**3519**	**4287**
	55/45/20 °C	936	1395	1775	2118
3600	**75/65/20 °C**	**1886**	**2869**	**3726**	**4540**
	55/45/20 °C	991	1477	1879	2243
3800	**75/65/20 °C**	**1991**	**3029**	**3933**	**4792**
	55/45/20 °C	1046	1559	1984	2368
4000	**75/65/20 °C**	**2096**	**3188**	**4140**	**5044**
	55/45/20 °C	1101	1641	2088	2492

Thermal output of the radiators [W] in accordance with EN 442 for parameters 75/65/20 °C and 55/45/20 °C.

exponent n	**1.26**	**1.30**	**1.34**	**1.38**

NARBONNE

RADIATOR DESCRIPTION - AN EXAMPLE : **NARBONNE 34 70 1600**

name
type
height
length

depth [mm]		175 mm			
length [mm]	height [mm]	70	142	214	286
	$t_z / t_p / t_i$	NA 34	NA 34	NA 34	NA 34
		[W]	[W]	[W]	[W]
500	**75/65/20 °C** 55/45/20 °C	**331** 180	**525** 276	**697** 353	**862** 426
600	**75/65/20 °C** 55/45/20 °C	**397** 216	**630** 331	**836** 424	**1034** 511
700	**75/65/20 °C** 55/45/20 °C	**463** 252	**735** 386	**976** 495	**1206** 596
800	**75/65/20 °C** 55/45/20 °C	**529** 288	**840** 441	**1115** 565	**1378** 681
900	**75/65/20 °C** 55/45/20 °C	**595** 324	**945** 496	**1255** 636	**1551** 766
1000	**75/65/20 °C** 55/45/20 °C	**661** 360	**1050** 552	**1394** 707	**1723** 851
1100	**75/65/20 °C** 55/45/20 °C	**727** 396	**1155** 607	**1533** 777	**1895** 936
1200	**75/65/20 °C** 55/45/20 °C	**793** 432	**1260** 662	**1673** 848	**2068** 1022
1300	**75/65/20 °C** 55/45/20 °C	**859** 468	**1365** 717	**1812** 919	**2240** 1107
1400	**75/65/20 °C** 55/45/20 °C	**925** 504	**1470** 772	**1952** 990	**2412** 1192
1600	**75/65/20 °C** 55/45/20 °C	**1058** 576	**1680** 883	**2230** 1130	**2757** 1362
1800	**75/65/20 °C** 55/45/20 °C	**1190** 648	**1890** 993	**2509** 1272	**3101** 1532
2000	**75/65/20 °C** 55/45/20 °C	**1322** 720	**2100** 1103	**2788** 1413	**3446** 1703
2200	**75/65/20 °C** 55/45/20 °C	**1454** 792	**2310** 1214	**3067** 1555	**3791** 1873
2400	**75/65/20 °C** 55/45/20 °C	**1586** 864	**2520** 1324	**3346** 1696	**4135** 2043
2600	**75/65/20 °C** 55/45/20 °C	**1719** 936	**2730** 1434	**3624** 1837	**4480** 2214
2800	**75/65/20 °C** 55/45/20 °C	**1851** 1008	**2940** 1545	**3903** 1979	**4824** 2384
3000	**75/65/20 °C** 55/45/20 °C	**1983** 1080	**3150** 1655	**4182** 2120	**5169** 2554
3200	**75/65/20 °C** 55/45/20 °C	**2115** 1152	**3360** 1765	**4461** 2261	**5514** 2725
3400	**75/65/20 °C** 55/45/20 °C	**2247** 1223	**3570** 1876	**4740** 2403	**5858** 2895
3600	**75/65/20 °C** 55/45/20 °C	**2380** 1296	**3780** 1986	**5018** 2544	**6203** 3065
3800	**75/65/20 °C** 55/45/20 °C	**2512** 1368	**3990** 2096	**5297** 2685	**6547** 3235
4000	**75/65/20 °C** 55/45/20 °C	**2644** 1440	**4200** 2207	**5576** 2827	**6892** 3406

Thermal output of the radiators [W] in accordance with EN 442 for parameters 75/65/20 °C and 55/45/20 °C.

exponent n	**1.19**	**1.26**	**1.33**	**1.38**

NARBONNE

RADIATOR DESCRIPTION - AN EXAMPLE : **NARBONNE 34 70 1600**

name
type
height
length

depth [mm]		245 mm 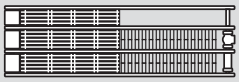			
length [mm]	height [mm]	70	142	214	286
	$t_z / t_p / t_i$	NA-S 34	NA-S 34	NA-S 34	NA-S 34
		[W]	[W]	[W]	[W]
500	**75/65/20 °C** 55/45/20 °C	**331** 180	**525** 276	**697** 353	**862** 426
600	**75/65/20 °C** 55/45/20 °C	**397** 216	**630** 331	**836** 424	**1034** 511
700	**75/65/20 °C** 55/45/20 °C	**463** 252	**735** 386	**976** 495	**1206** 596
800	**75/65/20 °C** 55/45/20 °C	**529** 288	**840** 441	**1115** 565	**1378** 681
900	**75/65/20 °C** 55/45/20 °C	**595** 324	**945** 496	**1255** 636	**1551** 766
1000	**75/65/20 °C** 55/45/20 °C	**661** 360	**1050** 552	**1394** 707	**1723** 851
1100	**75/65/20 °C** 55/45/20 °C	**727** 396	**1155** 607	**1533** 777	**1895** 936
1200	**75/65/20 °C** 55/45/20 °C	**793** 432	**1260** 662	**1673** 848	**2068** 1022
1300	**75/65/20 °C** 55/45/20 °C	**859** 468	**1365** 717	**1812** 919	**2240** 1107
1400	**75/65/20 °C** 55/45/20 °C	**925** 504	**1470** 772	**1952** 990	**2412** 1192
1600	**75/65/20 °C** 55/45/20 °C	**1058** 576	**1680** 883	**2230** 1130	**2757** 1362
1800	**75/65/20 °C** 55/45/20 °C	**1190** 648	**1890** 993	**2509** 1272	**3101** 1532
2000	**75/65/20 °C** 55/45/20 °C	**1322** 720	**2100** 1103	**2788** 1413	**3446** 1703
2200	**75/65/20 °C** 55/45/20 °C	**1454** 792	**2310** 1214	**3067** 1555	**3791** 1873
2400	**75/65/20 °C** 55/45/20 °C	**1586** 864	**2520** 1324	**3346** 1696	**4135** 2043
2600	**75/65/20 °C** 55/45/20 °C	**1719** 936	**2730** 1434	**3624** 1837	**4480** 2214
2800	**75/65/20 °C** 55/45/20 °C	**1851** 1008	**2940** 1545	**3903** 1979	**4824** 2384
3000	**75/65/20 °C** 55/45/20 °C	**1983** 1080	**3150** 1655	**4182** 2120	**5169** 2554
3200	**75/65/20 °C** 55/45/20 °C	**2115** 1152	**3360** 1765	**4461** 2261	**5514** 2725
3400	**75/65/20 °C** 55/45/20 °C	**2247** 1223	**3570** 1876	**4740** 2403	**5858** 2895
3600	**75/65/20 °C** 55/45/20 °C	**2380** 1296	**3780** 1986	**5018** 2544	**6203** 3065
3800	**75/65/20 °C** 55/45/20 °C	**2512** 1368	**3990** 2096	**5297** 2685	**6547** 3235
4000	**75/65/20 °C** 55/45/20 °C	**2644** 1440	**4200** 2207	**5576** 2827	**6892** 3406

Thermal output of the radiators [W] in accordance with EN 442 for parameters 75/65/20 °C and 55/45/20 °C.

exponent n	**1.19**	**1.26**	**1.33**	**1.38**

NARBONNE

RADIATOR DESCRIPTION - AN EXAMPLE : **NARBONNE 35 70 1600**

name
type
height
length

depth [mm]		232 mm 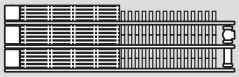			
length [mm]	height [mm]	70	142	214	286
	$t_z / t_p / t_i$	NA 35	NA 35	NA 35	NA 35
		[W]	[W]	[W]	[W]
500	**75/65/20 °C** 55/45/20 °C	**405** 215	**599** 310	**826** 414	**986** 482
600	**75/65/20 °C** 55/45/20 °C	**485** 257	**718** 371	**991** 497	**1183** 579
700	**75/65/20 °C** 55/45/20 °C	**566** 300	**838** 434	**1156** 580	**1380** 675
800	**75/65/20 °C** 55/45/20 °C	**647** 343	**958** 496	**1321** 663	**1577** 771
900	**75/65/20 °C** 55/45/20 °C	**728** 386	**1077** 557	**1486** 746	**1774** 868
1000	**75/65/20 °C** 55/45/20 °C	**809** 429	**1197** 619	**1651** 828	**1971** 964
1100	**75/65/20 °C** 55/45/20 °C	**890** 472	**1317** 681	**1816** 911	**2168** 1060
1200	**75/65/20 °C** 55/45/20 °C	**971** 515	**1436** 743	**1981** 994	**2365** 1157
1300	**75/65/20 °C** 55/45/20 °C	**1052** 558	**1556** 805	**2146** 1077	**2562** 1253
1400	**75/65/20 °C** 55/45/20 °C	**1133** 601	**1676** 867	**2311** 1160	**2759** 1349
1600	**75/65/20 °C** 55/45/20 °C	**1294** 687	**1915** 991	**2642** 1326	**3154** 1543
1800	**75/65/20 °C** 55/45/20 °C	**1456** 773	**2155** 1115	**2972** 1491	**3548** 1735
2000	**75/65/20 °C** 55/45/20 °C	**1618** 859	**2394** 1239	**3302** 1657	**3942** 1928
2200	**75/65/20 °C** 55/45/20 °C	**1780** 945	**2633** 1362	**3632** 1822	**4336** 2121
2400	**75/65/20 °C** 55/45/20 °C	**1942** 1031	**2873** 1486	**3962** 1988	**4730** 2314
2600	**75/65/20 °C** 55/45/20 °C	**2103** 1116	**3112** 1610	**4293** 2154	**5125** 2507
2800	**75/65/20 °C** 55/45/20 °C	**2265** 1202	**3352** 1734	**4623** 2320	**5519** 2699
3000	**75/65/20 °C** 55/45/20 °C	**2427** 1288	**3591** 1858	**4953** 2485	**5913** 2892
3200	**75/65/20 °C** 55/45/20 °C	**2589** 1374	**3830** 1982	**5283** 2651	**6307** 3085
3400	**75/65/20 °C** 55/45/20 °C	**2751** 1460	**4070** 2106	**5613** 2816	**6701** 3278
3600	**75/65/20 °C** 55/45/20 °C	**2912** 1546	**4309** 2229	**5944** 2983	**7096** 3471
3800	**75/65/20 °C** 55/45/20 °C	**3074** 1632	**4549** 2354	**6274** 3148	**7490** 3663
4000	**75/65/20 °C** 55/45/20 °C	**3236** 1718	**4788** 2477	**6604** 3314	**7884** 3856

Thermal output of the radiators [W] in accordance with EN 442 for parameters 75/65/20 °C and 55/45/20 °C.

exponent n	**1.24**	**1.29**	**1.35**	**1.40**

NARBONNE

RADIATOR DESCRIPTION - AN EXAMPLE : **NARBONNE 46 70 1600**

name
type
height
length

depth [mm]		257 mm 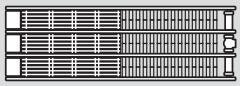			
length [mm]	height [mm]	70	142	214	286
	$t_z / t_p / t_i$	NA 46	NA 46	NA 46	NA 46
		[W]	[W]	[W]	[W]
500	**75/65/20 °C** 55/45/20 °C	**475** 253	**727** 374	**1036** 517	**1224** 599
600	**75/65/20 °C** 55/45/20 °C	**570** 304	**872** 449	**1243** 621	**1468** 718
700	**75/65/20 °C** 55/45/20 °C	**665** 355	**1018** 524	**1450** 724	**1713** 838
800	**75/65/20 °C** 55/45/20 °C	**760** 405	**1163** 599	**1658** 828	**1958** 958
900	**75/65/20 °C** 55/45/20 °C	**855** 456	**1309** 674	**1865** 931	**2202** 1077
1000	**75/65/20 °C** 55/45/20 °C	**950** 507	**1454** 748	**2072** 1034	**2447** 1197
1100	**75/65/20 °C** 55/45/20 °C	**1045** 557	**1599** 823	**2279** 1138	**2692** 1317
1200	**75/65/20 °C** 55/45/20 °C	**1140** 608	**1745** 898	**2486** 1241	**2936** 1436
1300	**75/65/20 °C** 55/45/20 °C	**1235** 659	**1890** 973	**2694** 1345	**3181** 1556
1400	**75/65/20 °C** 55/45/20 °C	**1330** 710	**2036** 1048	**2901** 1448	**3426** 1676
1600	**75/65/20 °C** 55/45/20 °C	**1520** 811	**2326** 1197	**3315** 1655	**3915** 1915
1800	**75/65/20 °C** 55/45/20 °C	**1710** 912	**2617** 1347	**3730** 1862	**4405** 2155
2000	**75/65/20 °C** 55/45/20 °C	**1900** 1014	**2908** 1497	**4144** 2069	**4894** 2394
2200	**75/65/20 °C** 55/45/20 °C	**2090** 1115	**3199** 1647	**4558** 2275	**5383** 2633
2400	**75/65/20 °C** 55/45/20 °C	**2280** 1216	**3490** 1796	**4973** 2483	**5873** 2873
2600	**75/65/20 °C** 55/45/20 °C	**2470** 1318	**3780** 1946	**5387** 2689	**6362** 3112
2800	**75/65/20 °C** 55/45/20 °C	**2660** 1419	**4071** 2096	**5802** 2896	**6852** 3351
3000	**75/65/20 °C** 55/45/20 °C	**2850** 1520	**4362** 2245	**6216** 3103	**7341** 3591
3200	**75/65/20 °C** 55/45/20 °C				
3400	**75/65/20 °C** 55/45/20 °C				
3600	**75/65/20 °C** 55/45/20 °C				
3800	**75/65/20 °C** 55/45/20 °C				
4000	**75/65/20 °C** 55/45/20 °C				

Thermal output of the radiators [W] in accordance with EN 442 for parameters 75/65/20 °C and 55/45/20 °C.

exponent n	**1.23**	**1.30**	**1.36**	**1.40**

NARBONNE

RADIATOR DESCRIPTION - AN EXAMPLE : **NARBONNE 47 70 1600**

name
type
height
length

depth [mm]		327 mm 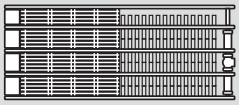			
length [mm]	height [mm]	70	142	214	286
	$t_z / t_p / t_i$	NA-S 47	NA-S 47	NA-S 47	NA-S 47
		[W]	[W]	[W]	[W]
500	**75/65/20 °C** 55/45/20 °C	**493** 273	**761** 400	**1151** 575	**1334** 656
600	**75/65/20 °C** 55/45/20 °C	**592** 327	**913** 480	**1381** 689	**1600** 787
700	**75/65/20 °C** 55/45/20 °C	**690** 382	**1065** 560	**1611** 804	**1867** 918
800	**75/65/20 °C** 55/45/20 °C	**789** 436	**1218** 640	**1842** 920	**2134** 1049
900	**75/65/20 °C** 55/45/20 °C	**887** 490	**1370** 720	**2072** 1034	**2400** 1180
1000	**75/65/20 °C** 55/45/20 °C	**986** 545	**1522** 800	**2302** 1149	**2667** 1311
1100	**75/65/20 °C** 55/45/20 °C	**1085** 600	**1674** 879	**2532** 1264	**2934** 1442
1200	**75/65/20 °C** 55/45/20 °C	**1183** 654	**1826** 959	**2762** 1379	**3200** 1573
1300	**75/65/20 °C** 55/45/20 °C	**1282** 709	**1979** 1040	**2993** 1494	**3467** 1704
1400	**75/65/20 °C** 55/45/20 °C	**1380** 763	**2131** 1120	**3223** 1609	**3734** 1836
1600	**75/65/20 °C** 55/45/20 °C	**1578** 872	**2435** 1279	**3683** 1839	**4267** 2098
1800	**75/65/20 °C** 55/45/20 °C	**1775** 981	**2740** 1440	**4144** 2069	**4801** 2360
2000	**75/65/20 °C** 55/45/20 °C	**1972** 1090	**3044** 1599	**4604** 2298	**5334** 2622
2200	**75/65/20 °C** 55/45/20 °C	**2169** 1199	**3348** 1759	**5064** 2528	**5867** 2884
2400	**75/65/20 °C** 55/45/20 °C	**2366** 1308	**3653** 1919	**5525** 2758	**6401** 3147
2600	**75/65/20 °C** 55/45/20 °C	**2564** 1418	**3957** 2079	**5985** 2988	**6934** 3409
2800	**75/65/20 °C** 55/45/20 °C	**2761** 1527	**4262** 2239	**6446** 3218	**7468** 3671
3000	**75/65/20 °C** 55/45/20 °C				
3200	**75/65/20 °C** 55/45/20 °C				
3400	**75/65/20 °C** 55/45/20 °C				
3600	**75/65/20 °C** 55/45/20 °C				
3800	**75/65/20 °C** 55/45/20 °C				
4000	**75/65/20 °C** 55/45/20 °C				

Thermal output of the radiators [W] in accordance with EN 442 for parameters 75/65/20 °C and 55/45/20 °C.

exponent n	**1.16**	**1.26**	**1.36**	**1.39**

NARBONNE

RADIATOR DESCRIPTION - AN EXAMPLE : **NARBONNE 58 70 1600**

name
type
height
length

depth [mm]		339 mm 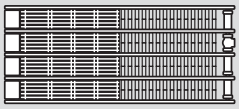			
length [mm]	height [mm]	70	142	214	286
	$t_z / t_p / t_i$	NA 58	NA 58	NA 58	NA 58
		[W]	[W]	[W]	[W]
500	**75/65/20 °C** 55/45/20 °C	**512** 285	**830** 438	**1296** 650	**1511** 743
600	**75/65/20 °C** 55/45/20 °C	**614** 341	**995** 525	**1555** 780	**1813** 891
700	**75/65/20 °C** 55/45/20 °C	**716** 398	**1161** 613	**1814** 910	**2115** 1040
800	**75/65/20 °C** 55/45/20 °C	**818** 455	**1327** 701	**2074** 1041	**2418** 1189
900	**75/65/20 °C** 55/45/20 °C	**921** 512	**1493** 788	**2333** 1171	**2720** 1337
1000	**75/65/20 °C** 55/45/20 °C	**1023** 569	**1659** 876	**2592** 1301	**3022** 1486
1100	**75/65/20 °C** 55/45/20 °C	**1125** 625	**1825** 964	**2851** 1431	**3324** 1634
1200	**75/65/20 °C** 55/45/20 °C	**1228** 682	**1991** 1051	**3110** 1561	**3626** 1783
1300	**75/65/20 °C** 55/45/20 °C	**1330** 739	**2157** 1139	**3370** 1691	**3929** 1932
1400	**75/65/20 °C** 55/45/20 °C	**1432** 796	**2323** 1227	**3629** 1821	**4231** 2080
1600	**75/65/20 °C** 55/45/20 °C	**1637** 910	**2654** 1401	**4147** 2081	**4835** 2377
1800	**75/65/20 °C** 55/45/20 °C	**1841** 1023	**2986** 1577	**4666** 2341	**5440** 2674
2000	**75/65/20 °C** 55/45/20 °C	**2046** 1137	**3318** 1752	**5184** 2601	**6044** 2971
2200	**75/65/20 °C** 55/45/20 °C	**2251** 1251	**3650** 1927	**5702** 2861	**6648** 3268
2400	**75/65/20 °C** 55/45/20 °C				
2600	**75/65/20 °C** 55/45/20 °C				
2800	**75/65/20 °C** 55/45/20 °C				
3000	**75/65/20 °C** 55/45/20 °C				
3200	**75/65/20 °C** 55/45/20 °C				
3400	**75/65/20 °C** 55/45/20 °C				
3600	**75/65/20 °C** 55/45/20 °C				
3800	**75/65/20 °C** 55/45/20 °C				
4000	**75/65/20 °C** 55/45/20 °C				

Thermal output of the radiators [W] in accordance with EN 442 for parameters 75/65/20 °C and 55/45/20 °C.

exponent n	**1.15**	**1.25**	**1.35**	**1.39**

NARBONNE

RADIATOR DESCRIPTION - AN EXAMPLE : **NARBONNE 10 358 1600**

name
type
height
length

depth [mm]		68 mm					
length [mm]	height [mm]	358	430	502	574	646	790
	$t_z / t_p / t_i$	NA 10	NA 10	NA 10	NA 10	NA 10	NA 10
		[W]	[W]	[W]	[W]	[W]	[W]
500	**75/65/20 °C**	**197**	**229**	**262**	**294**	**328**	**398**
	55/45/20 °C	105	122	138	155	172	208
600	**75/65/20 °C**	**236**	**275**	**314**	**353**	**393**	**477**
	55/45/20 °C	125	146	166	186	206	249
700	**75/65/20 °C**	**276**	**321**	**366**	**412**	**459**	**557**
	55/45/20 °C	146	170	193	218	241	291
800	**75/65/20 °C**	**315**	**366**	**418**	**470**	**524**	**636**
	55/45/20 °C	167	194	221	248	275	332
900	**75/65/20 °C**	**355**	**412**	**471**	**529**	**590**	**716**
	55/45/20 °C	188	219	249	279	310	374
1000	**75/65/20 °C**	**394**	**458**	**523**	**588**	**655**	**795**
	55/45/20 °C	209	243	276	311	344	416
1100	**75/65/20 °C**	**433**	**504**	**575**	**647**	**721**	**875**
	55/45/20 °C	230	268	304	342	379	457
1200	**75/65/20 °C**	**473**	**550**	**628**	**706**	**786**	**954**
	55/45/20 °C	251	292	332	373	413	499
1300	**75/65/20 °C**	**512**	**595**	**680**	**764**	**852**	**1034**
	55/45/20 °C	272	316	359	403	448	540
1400	**75/65/20 °C**	**552**	**641**	**732**	**823**	**917**	**1113**
	55/45/20 °C	293	340	387	435	482	582
1600	**75/65/20 °C**	**630**	**733**	**837**	**941**	**1048**	**1272**
	55/45/20 °C	334	389	442	497	551	665
1800	**75/65/20 °C**	**709**	**824**	**941**	**1058**	**1179**	**1431**
	55/45/20 °C	376	437	497	559	619	748
2000	**75/65/20 °C**	**788**	**916**	**1046**	**1176**	**1310**	**1590**
	55/45/20 °C	418	486	552	621	688	831
2200	**75/65/20 °C**	**867**	**1008**	**1151**	**1294**	**1441**	**1749**
	55/45/20 °C	460	535	608	683	757	914
2400	**75/65/20 °C**	**946**	**1099**	**1255**	**1411**	**1572**	**1908**
	55/45/20 °C	502	583	663	745	826	997
2600	**75/65/20 °C**	**1024**	**1191**	**1360**	**1529**	**1703**	**2067**
	55/45/20 °C	544	632	718	807	895	1080
2800	**75/65/20 °C**	**1103**	**1282**	**1464**	**1646**	**1834**	**2226**
	55/45/20 °C	585	680	773	869	964	1164
3000	**75/65/20 °C**	**1182**	**1374**	**1569**	**1764**	**1965**	**2385**
	55/45/20 °C	627	729	829	932	1032	1247
3200	**75/65/20 °C**	**1261**	**1466**	**1674**	**1882**	**2096**	
	55/45/20 °C	669	778	884	994	1101	
3400	**75/65/20 °C**	**1340**	**1557**	**1778**	**1999**	**2227**	
	55/45/20 °C	711	826	939	1056	1170	
3600	**75/65/20 °C**	**1418**	**1649**	**1883**	**2117**	**2358**	
	55/45/20 °C	753	875	994	1118	1239	
3800	**75/65/20 °C**	**1497**	**1740**	**1987**	**2234**	**2489**	
	55/45/20 °C	795	924	1049	1180	1308	
4000	**75/65/20 °C**	**1576**	**1832**	**2092**	**2352**	**2620**	
	55/45/20 °C	836	972	1105	1242	1376	

Thermal output of the radiators [W] in accordance with EN 442 for parameters 75/65/20 °C and 55/45/20 °C.

exponent n	**1.24**	**1.24**	**1.25**	**1.25**	**1.26**	**1.27**

NARBONNE

RADIATOR DESCRIPTION - AN EXAMPLE : **NARBONNE 11 358 1600**

name
type
height
length

depth [mm]		68 mm					
length [mm]	height [mm]	358	430	502	574	646	790
	$t_z / t_p / t_i$	NA 11	NA 11	NA 11	NA 11	NA 11	NA 11
		[W]	[W]	[W]	[W]	[W]	[W]
500	**75/65/20 °C**	**334**	**380**	**423**	**461**	**495**	**553**
	55/45/20 °C	172	196	217	235	252	279
600	**75/65/20 °C**	**400**	**456**	**507**	**553**	**593**	**663**
	55/45/20 °C	206	235	260	282	302	334
700	**75/65/20 °C**	**467**	**532**	**592**	**645**	**692**	**774**
	55/45/20 °C	240	274	303	329	353	390
800	**75/65/20 °C**	**534**	**608**	**676**	**737**	**791**	**884**
	55/45/20 °C	275	313	346	376	403	446
900	**75/65/20 °C**	**600**	**684**	**761**	**829**	**890**	**995**
	55/45/20 °C	309	352	390	422	453	502
1000	**75/65/20 °C**	**667**	**760**	**845**	**921**	**989**	**1105**
	55/45/20 °C	343	391	433	469	504	557
1100	**75/65/20 °C**	**734**	**836**	**930**	**1013**	**1088**	**1216**
	55/45/20 °C	378	430	476	516	554	613
1200	**75/65/20 °C**	**800**	**912**	**1014**	**1105**	**1187**	**1326**
	55/45/20 °C	412	469	519	563	605	669
1300	**75/65/20 °C**	**867**	**988**	**1099**	**1197**	**1286**	**1437**
	55/45/20 °C	446	509	563	610	655	725
1400	**75/65/20 °C**	**934**	**1064**	**1183**	**1289**	**1385**	**1547**
	55/45/20 °C	481	548	606	657	706	780
1600	**75/65/20 °C**	**1067**	**1216**	**1352**	**1474**	**1582**	**1768**
	55/45/20 °C	549	626	692	751	806	892
1800	**75/65/20 °C**	**1201**	**1368**	**1521**	**1658**	**1780**	**1989**
	55/45/20 °C	618	704	779	845	907	1003
2000	**75/65/20 °C**	**1334**	**1520**	**1690**	**1842**	**1978**	**2210**
	55/45/20 °C	687	782	865	939	1008	1115
2200	**75/65/20 °C**	**1467**	**1672**	**1859**	**2026**	**2176**	**2431**
	55/45/20 °C	755	861	952	1032	1109	1226
2400	**75/65/20 °C**	**1601**	**1824**	**2028**	**2210**	**2374**	**2652**
	55/45/20 °C	824	939	1039	1126	1210	1338
2600	**75/65/20 °C**	**1734**	**1976**	**2197**	**2395**	**2571**	**2873**
	55/45/20 °C	893	1017	1125	1220	1310	1449
2800	**75/65/20 °C**	**1868**	**2128**	**2366**	**2579**	**2769**	**3094**
	55/45/20 °C	962	1095	1212	1314	1411	1560
3000	**75/65/20 °C**	**2001**	**2280**	**2535**	**2763**	**2967**	**3315**
	55/45/20 °C	1030	1174	1298	1408	1512	1672
3200	**75/65/20 °C**	**2134**	**2432**	**2704**	**2947**	**3165**	
	55/45/20 °C	1098	1252	1385	1502	1613	
3400	**75/65/20 °C**	**2268**	**2584**	**2873**	**3131**	**3363**	
	55/45/20 °C	1167	1330	1471	1595	1714	
3600	**75/65/20 °C**	**2401**	**2736**	**3042**	**3316**	**3560**	
	55/45/20 °C	1236	1408	1558	1690	1814	
3800	**75/65/20 °C**	**2535**	**2888**	**3211**	**3500**	**3758**	
	55/45/20 °C	1356	1487	1644	1783	1915	
4000	**75/65/20 °C**	**2668**	**3040**	**3380**	**3684**	**3956**	
	55/45/20 °C	1373	1565	1731	1877	2016	

Thermal output of the radiators [W] in accordance with EN 442 for parameters 75/65/20 °C and 55/45/20 °C.

exponent n	**1.30**	**1.30**	**1.31**	**1.32**	**1.32**	**1.34**

NARBONNE

RADIATOR DESCRIPTION - AN EXAMPLE : **NARBONNE 22 358 1600**

name
type
height
length

depth [mm]		93 mm					
length [mm]	height [mm]	358	430	502	574	646	790
	$t_z / t_p / t_i$	NA 22	NA 22	NA 22	NA 22	NA 22	NA 22
		[W]	[W]	[W]	[W]	[W]	[W]
500	**75/65/20 °C**	**599**	**672**	**737**	**796**	**850**	**943**
	55/45/20 °C	302	337	368	395	420	459
600	**75/65/20 °C**	**718**	**806**	**884**	**955**	**1019**	**1132**
	55/45/20 °C	362	404	441	474	504	551
700	**75/65/20 °C**	**838**	**940**	**1032**	**1114**	**1189**	**1320**
	55/45/20 °C	423	472	515	553	588	642
800	**75/65/20 °C**	**958**	**1074**	**1179**	**1274**	**1359**	**1509**
	55/45/20 °C	483	539	589	633	672	734
900	**75/65/20 °C**	**1077**	**1209**	**1327**	**1433**	**1529**	**1697**
	55/45/20 °C	543	607	662	712	756	826
1000	**75/65/20 °C**	**1197**	**1343**	**1474**	**1592**	**1699**	**1886**
	55/45/20 °C	604	674	736	791	840	918
1100	**75/65/20 °C**	**1317**	**1477**	**1621**	**1751**	**1869**	**2075**
	55/45/20 °C	664	741	809	870	924	1010
1200	**75/65/20 °C**	**1436**	**1612**	**1769**	**1910**	**2039**	**2263**
	55/45/20 °C	724	809	883	949	1008	1101
1300	**75/65/20 °C**	**1556**	**1746**	**1916**	**2070**	**2209**	**2452**
	55/45/20 °C	785	876	956	1028	1092	1193
1400	**75/65/20 °C**	**1676**	**1880**	**2064**	**2229**	**2379**	**2640**
	55/45/20 °C	845	943	1030	1107	1176	1285
1600	**75/65/20 °C**	**1915**	**2149**	**2358**	**2547**	**2718**	**3018**
	55/45/20 °C	966	1078	1177	1265	1343	1469
1800	**75/65/20 °C**	**2155**	**2417**	**2653**	**2866**	**3058**	**3395**
	55/45/20 °C	1087	1213	1324	1423	1511	1652
2000	**75/65/20 °C**	**2394**	**2686**	**2948**	**3184**	**3398**	**3772**
	55/45/20 °C	1207	1348	1472	1581	1679	1836
2200	**75/65/20 °C**	**2633**	**2955**	**3243**	**3502**	**3738**	**4149**
	55/45/20 °C	1328	1483	1619	1739	1847	2019
2400	**75/65/20 °C**	**2873**	**3223**	**3538**	**3821**	**4078**	**4526**
	55/45/20 °C	1449	1617	1766	1898	2015	2202
2600	**75/65/20 °C**	**3112**	**3492**	**3832**	**4139**	**4417**	**4904**
	55/45/20 °C	1570	1752	1913	2056	2183	2386
2800	**75/65/20 °C**	**3352**	**3760**	**4127**	**4458**	**4757**	**5281**
	55/45/20 °C	1691	1887	2060	2214	2351	2570
3000	**75/65/20 °C**	**3591**	**4029**	**4422**	**4776**	**5097**	**5658**
	55/45/20 °C	1811	2022	2208	2372	2519	2753
3200	**75/65/20 °C**	**3830**	**4298**	**4717**	**5094**	**5437**	
	55/45/20 °C	1932	2157	2355	2530	2687	
3400	**75/65/20 °C**	**4070**	**4566**	**5012**	**5413**	**5777**	
	55/45/20 °C	2053	2291	2502	2688	2855	
3600	**75/65/20 °C**	**4309**	**4835**	**5306**	**5731**	**6116**	
	55/45/20 °C	2173	2426	2649	2846	3022	
3800	**75/65/20 °C**	**4549**	**5103**	**5601**	**6050**	**6456**	
	55/45/20 °C	2294	2561	2796	3005	3190	
4000	**75/65/20 °C**	**4788**	**5372**	**5896**	**6368**	**6796**	
	55/45/20 °C	2415	2696	2943	3163	3358	

Thermal output of the radiators [W] in accordance with EN 442 for parameters 75/65/20 °C and 55/45/20 °C.

exponent n	**1.34**	**1.35**	**1.36**	**1.37**	**1.38**	**1.41**

NARBONNE VT

Narbonne VT radiators are composed of several interconnected profiled steel heating elements of rectangular cross sections. Each radiator has two bottom connecting openings with G ¾" male threads that enable bottom connection. Three side openings with G ½" female threads are used as a standard to install a Danfoss thermostatic valve insert with pre-regulation, an air vent, and a blanking plug. Narbonne VT radiators have two side covers and a top masking grille.
Up to and including the height of 286 mm, Narbonne VT radiators are delivered without hangers, while models 358 mm to 790 mm high have, as a standard, installation hangers welded on the back of the radiator.
Narbonne VT radiators in the WVO version, up to 286 mm high, type NA-S 22, 34, and 47, are equipped with a protective screen that reduces emission of heat towards the external partition located behind the radiator.

technical specification

- Material : high quality steel profiles of a rectangular cross section, dimensions: 70 x 11 x 1.5 mm (high pressure version: 70 x 11 x 2.0 mm)
- Height : 142, 214, 286, 358, 430, 502, 574, 646, 790 mm
- Length : from 500 up to 4000 mm
- Depth : from 68 up to 327 mm
- Connections : 2 x G ¾" bottom, 3 x G ½" side
- Max. operating pressure : 5 bar for the standard version, 8 bar for the high pressure version
- Max. temperature : 110°C
- Colour : RAL 9016, other RAL colours available, surcharge at each order
- Brackets : wall or floor – ordered separately, at Client's preference
- Accessories : plug and air vent, Danfoss thermostatic valve insert included in the radiator's kit

NARBONNE VT

height from 142 up to 286 mm

front view

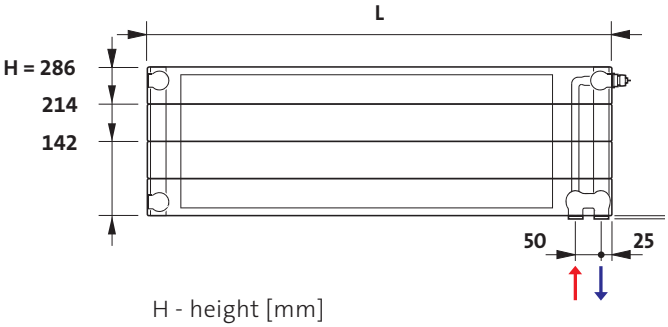

H - height [mm]
L - length [mm]

example side views

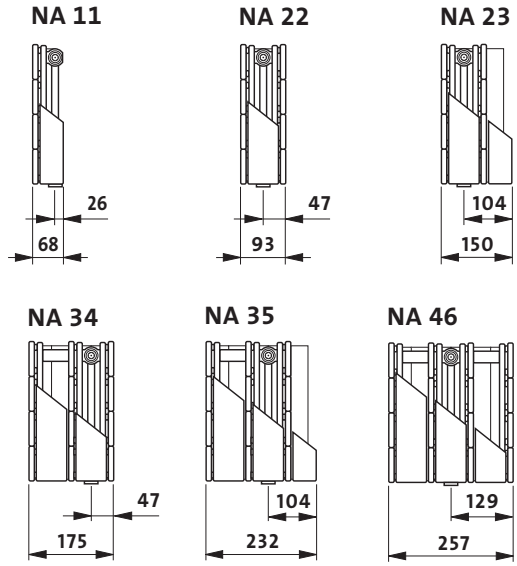

top view

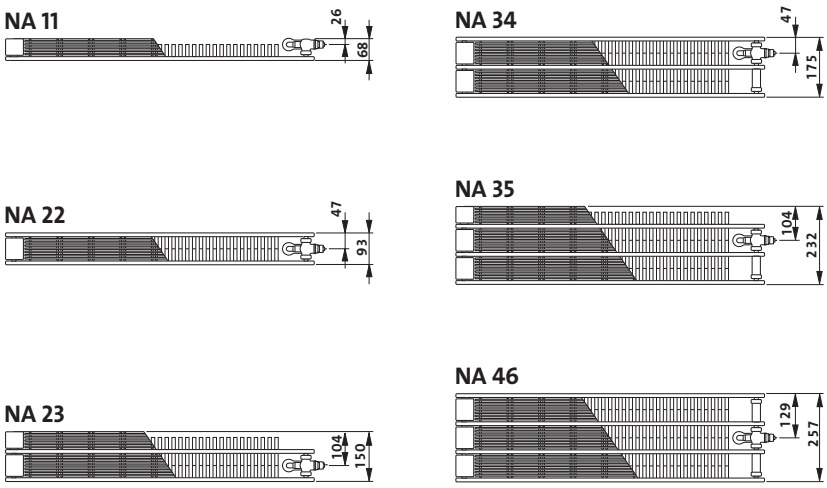

Note: The diagrams show the right-hand side versions of the radiators.

When an NA 34 radiator is turned and used as a left-hand side version radiator, the distance from the back wall of the radiator to the centers of the connection ports is equal to **129 mm.**

type	NA 11	NA 22	NA 23	NA 34	NA 35	NA 46
height [mm]	214; 286	142; 214; 286	142; 214; 286	142; 214; 286	142; 214; 286	142; 214; 286
length [mm]	500 - 4000 mm (depending on the type)					
step	100 mm (200 mm from the length of 1400 mm)					

NARBONNE VT

height from 142 up to 286 mm
a version with a protective screen

front view

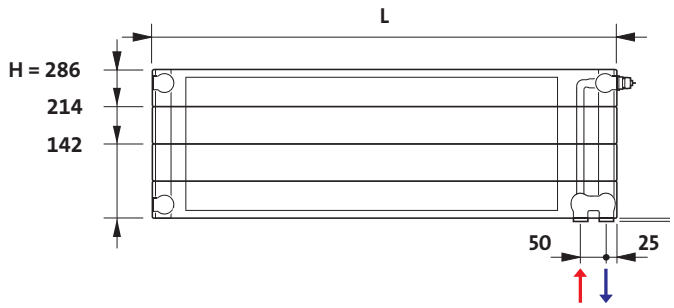

H - height [mm]
L - length [mm]

example side views

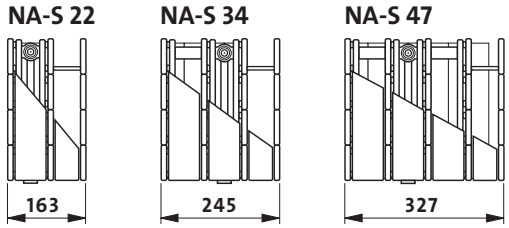

top view

NA-S 22

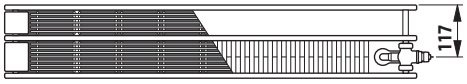

NA-S 34

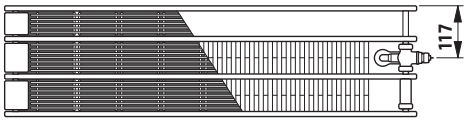

NA-S 47

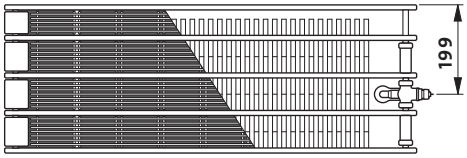

Radiators in the WVO version have a waterless protective screen welded to their backs; as a result of convection between the radiator and the protective screen, a large part of heat that would otherwise be waster returns to the room.

type	NA-S 22	NA-S 34	NA-S 47
height [mm]	142; 214; 286	142; 214; 286	142; 214; 286
length [mm]	500 - 4000 mm (in the case of NA-S 47 up to 2800 mm)		
step	100 mm (200 mm from the length of 1400 mm)		

NARBONNE VT

height from 358 up to 790 mm

front view

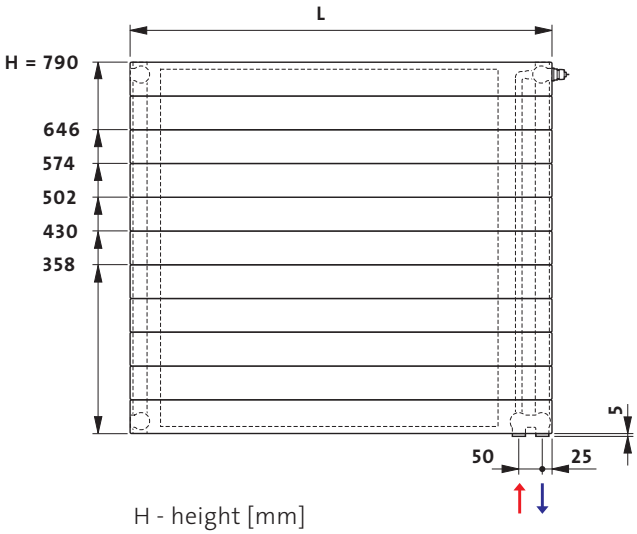

H - height [mm]
L - length [mm]

example side views

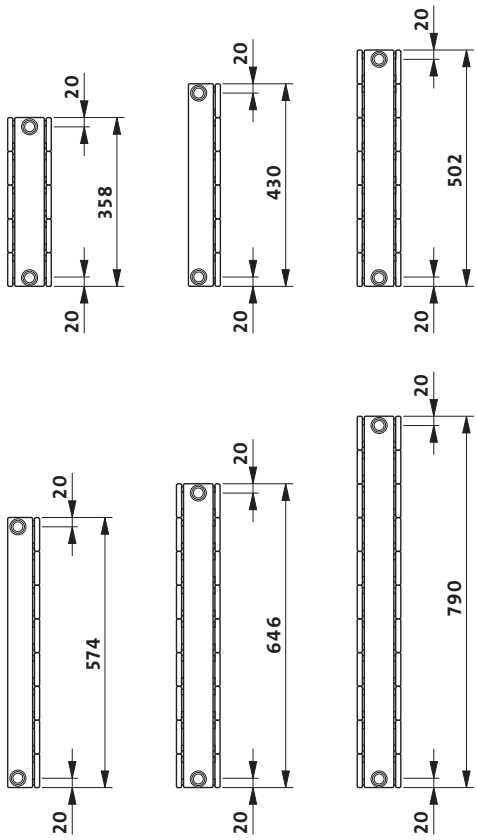

top view

NA 11

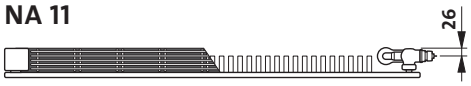

NA 22

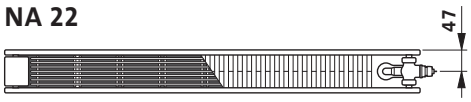

Note: The diagrams show the right-hand side versions of the radiators.

When an NA 34 radiator is turned and used as a left-hand side version radiator, the distance from the back wall of the radiator to the centers of the connection ports is equal to **129 mm.**

type	NA 11	NA 22
height [mm]	358, 430; 502; 574; 646; 790	358, 430; 502; 574; 646; 790
length [mm]	**500 - 4000 mm (depending on the type)**	
step	**100 mm (200 mm from the length of 1400 mm)**	

NARBONNE VT

weight and water volume

weight : kg/m

type	height [mm]								
	142	214	286	358	430	502	574	646	790
NA 11	-	11.14	14.51	16.71	19.85	22.99	26.15	29.29	33.55
NA 22	13.97	20.59	27.23	30.89	36.93	42.96	49.01	55.05	63.06
NA-S 22	19.43	28.34	37.24	-	-	-	-	-	-
NA 23	17.02	24.84	32.66	-	-	-	-	-	-
NA 34	23.93	35.18	46.42	-	-	-	-	-	-
NA-S 34	29.39	42.92	56.44	-	-	-	-	-	-
NA 35	26.98	39.42	51.86	-	-	-	-	-	-
NA 46	33.89	49.76	65.62	-	-	-	-	-	-
NA-S 47	41.27	60.50	79.74	-	-	-	-	-	-

water volume : l/m

type	height [mm]								
	142	214	286	358	430	502	574	646	790
NA 11	-	1.67	2.22	2.78	3.33	3.87	4.44	4.99	6.12
NA 22	2.18	3.34	4.44	5.55	6.66	7.77	8.88	9.99	12.22
NA-S 22	2.18	3.34	4.44	-	-	-	-	-	-
NA 23	2.18	3.34	4.44	-	-	-	-	-	-
NA 34	3.33	4.99	6.66	-	-	-	-	-	-
NA-S 34	3.33	4.99	6.66	-	-	-	-	-	-
NA 35	3.33	4.99	6.66	-	-	-	-	-	-
NA 46	4.53	6.79	9.06	-	-	-	-	-	-
NA-S 47	4.53	6.79	9.06	-	-	-	-	-	-

NARBONNE VT

Proper initial preset can be easily and precisely obtained with no necessity of using any dedicated tools (see the diagrams below).

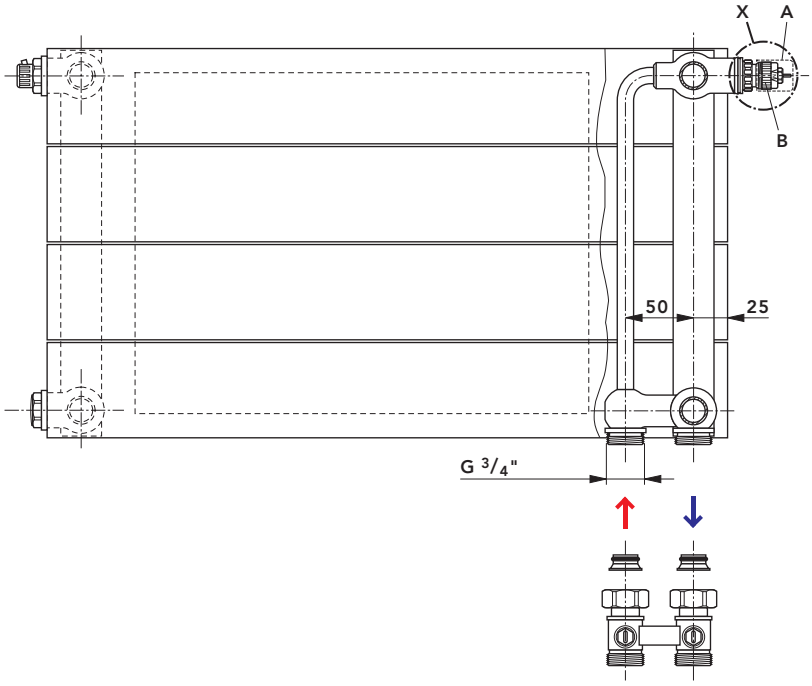

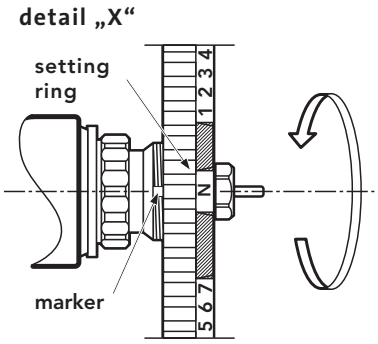

Danfoss valve insert
no. 013G0360

After the valve's masking cover has been removed (pos. A), a built-in valve insert (not included in the radiator's set) will be mounted (pos. B):
Danfoss (RA 2994, RAW 5115), **Oventrop Uni XD**, **Heimeier VK**, **Herz D**, **Honeywell thera-DA**.

Tips for setting:

- remove the plastic valve's masking cover;
- rotate the setting ring to achieve the required setting (1, 2,...7, N) opposite the marker;
- the preset can be adjusted in the range between 1 and 7, with the resolution of 0.5 of the scale. The factory default preset values correspond to the highest kv value, which in turn corresponds to the "N" setting.

Note: adjustment of preset values between the scale's elements, in the crossed-out area, is not allowed!

NARBONNE VT

RADIATOR DESCRIPTION - AN EXAMPLE : **NARBONNE VT 11 214 1600**

name
type
height
length

depth [mm]		68 mm					
length [mm]	height [mm]	142	214	286			
	t_z / t_p / t_i	NA 11	NA 11	NA 11			
		[W]	[W]	[W]	[W]	[W]	[W]
500	**75/65/20 °C** 55/45/20 °C	-	**232** 118	**289** 146			
600	**75/65/20 °C** 55/45/20 °C	-	**278** 142	**346** 175			
700	**75/65/20 °C** 55/45/20 °C	-	**325** 166	**404** 204			
800	**75/65/20 °C** 55/45/20 °C	-	**371** 189	**462** 233			
900	**75/65/20 °C** 55/45/20 °C	-	**418** 213	**519** 262			
1000	**75/65/20 °C** 55/45/20 °C	-	**464** 236	**577** 291			
1100	**75/65/20 °C** 55/45/20 °C	-	**510** 260	**635** 320			
1200	**75/65/20 °C** 55/45/20 °C	-	**557** 284	**692** 349			
1300	**75/65/20 °C** 55/45/20 °C	-	**603** 307	**750** 378			
1400	**75/65/20 °C** 55/45/20 °C	-	**650** 331	**808** 408			
1600	**75/65/20 °C** 55/45/20 °C	-	**742** 378	**923** 466			
1800	**75/65/20 °C** 55/45/20 °C	-	**835** 425	**1039** 524			
2000	**75/65/20 °C** 55/45/20 °C	-	**928** 473	**1154** 582			
2200	**75/65/20 °C** 55/45/20 °C	-	**1021** 520	**1269** 640			
2400	**75/65/20 °C** 55/45/20 °C	-	**1114** 568	**1385** 699			
2600	**75/65/20 °C** 55/45/20 °C	-	**1206** 614	**1500** 757			
2800	**75/65/20 °C** 55/45/20 °C	-	**1299** 662	**1616** 815			
3000	**75/65/20 °C** 55/45/20 °C	-	**1392** 709	**1731** 873			
3200	**75/65/20 °C** 55/45/20 °C	-	**1485** 757	**1846** 931			
3400	**75/65/20 °C** 55/45/20 °C	-	**1578** 804	**1962** 990			
3600	**75/65/20 °C** 55/45/20 °C	-	**1670** 851	**2077** 1048			
3800	**75/65/20 °C** 55/45/20 °C	-	**1763** 898	**2193** 1106			
4000	**75/65/20 °C** 55/45/20 °C	-	**1856** 946	**2308** 1164			

Thermal output of the radiators [W] in accordance with EN 442 for parameters 75/65/20 °C and 55/45/20 °C.

exponent n	-	**1.32**	**1.34**			

NARBONNE VT

RADIATOR DESCRIPTION - AN EXAMPLE : **NARBONNE VT 22 142 1600**

name
type
height
length

depth [mm]		93 mm			163 mm		
length [mm]	height [mm]	142	214	286	142	214	286
	$t_z / t_p / t_i$	NA 22	NA 22	NA 22	NA-S 22	NA-S 22	NA-S 22
		[W]	[W]	[W]	[W]	[W]	[W]
500	**75/65/20 °C**	**321**	**419**	**516**	**321**	**419**	**516**
	55/45/20 °C	165	211	255	165	211	255
600	**75/65/20 °C**	**385**	**503**	**619**	**385**	**503**	**619**
	55/45/20 °C	198	254	306	198	254	306
700	**75/65/20 °C**	**449**	**587**	**722**	**449**	**587**	**722**
	55/45/20 °C	231	296	357	231	296	357
800	**75/65/20 °C**	**513**	**670**	**826**	**513**	**670**	**826**
	55/45/20 °C	264	338	408	264	338	408
900	**75/65/20 °C**	**577**	**754**	**929**	**577**	**754**	**929**
	55/45/20 °C	297	380	459	297	380	459
1000	**75/65/20 °C**	**641**	**838**	**1032**	**641**	**838**	**1032**
	55/45/20 °C	330	423	510	330	423	510
1100	**75/65/20 °C**	**705**	**922**	**1135**	**705**	**922**	**1135**
	55/45/20 °C	363	465	561	363	465	561
1200	**75/65/20 °C**	**769**	**1006**	**1238**	**769**	**1006**	**1238**
	55/45/20 °C	396	507	612	396	507	612
1300	**75/65/20 °C**	**833**	**1089**	**1342**	**833**	**1089**	**1342**
	55/45/20 °C	429	549	663	429	549	663
1400	**75/65/20 °C**	**897**	**1173**	**1445**	**897**	**1173**	**1445**
	55/45/20 °C	462	592	714	462	592	714
1600	**75/65/20 °C**	**1026**	**1341**	**1651**	**1026**	**1341**	**1651**
	55/45/20 °C	528	676	816	528	676	816
1800	**75/65/20 °C**	**1154**	**1508**	**1858**	**1154**	**1508**	**1858**
	55/45/20 °C	594	761	918	594	761	918
2000	**75/65/20 °C**	**1282**	**1676**	**2064**	**1282**	**1676**	**2064**
	55/45/20 °C	660	845	1020	660	845	1020
2200	**75/65/20 °C**	**1410**	**1844**	**2270**	**1410**	**1844**	**2270**
	55/45/20 °C	726	930	1122	726	930	1122
2400	**75/65/20 °C**	**1538**	**2011**	**2477**	**1538**	**2011**	**2477**
	55/45/20 °C	792	1014	1224	792	1014	1224
2600	**75/65/20 °C**	**1667**	**2179**	**2683**	**1667**	**2179**	**2683**
	55/45/20 °C	858	1099	1326	858	1099	1326
2800	**75/65/20 °C**	**1795**	**2346**	**2890**	**1795**	**2346**	**2890**
	55/45/20 °C	924	1183	1428	924	1183	1428
3000	**75/65/20 °C**	**1923**	**2514**	**3096**	**1923**	**2514**	**3096**
	55/45/20 °C	990	1268	1530	990	1268	1530
3200	**75/65/20 °C**	**2051**	**2682**	**3302**	**2051**	**2682**	**3302**
	55/45/20 °C	1056	1353	1632	1056	1353	1632
3400	**75/65/20 °C**	**2179**	**2849**	**3509**	**2179**	**2849**	**3509**
	55/45/20 °C	1122	1437	1734	1122	1437	1734
3600	**75/65/20 °C**	**2308**	**3017**	**3715**	**2308**	**3017**	**3715**
	55/45/20 °C	1188	1522	1836	1188	1522	1836
3800	**75/65/20 °C**	**2436**	**3184**	**3922**	**2436**	**3184**	**3922**
	55/45/20 °C	1254	1606	1938	1254	1606	1938
4000	**75/65/20 °C**	**2564**	**3352**	**4128**	**2564**	**3352**	**4128**
	55/45/20 °C	1320	1691	2040	1320	1691	2040

Thermal output of the radiators [W] in accordance with EN 442 for parameters 75/65/20 °C and 55/45/20 °C.

exponent n	**1.30**	**1.34**	**1.38**	**1.30**	**1.34**	**1.38**

NARBONNE VT

RADIATOR DESCRIPTION - AN EXAMPLE : **NARBONNE VT 23 142 1600**

name
type
height
length

depth [mm]		150 mm			175 mm		
length [mm]	height [mm]	142	214	286	142	214	286
	$t_z / t_p / t_i$	NA 23	NA 23	NA 23	NA 34	NA 34	NA 34
		[W]	[W]	[W]	[W]	[W]	[W]
500	**75/65/20 °C**	**399**	**518**	**631**	**525**	**697**	**862**
	55/45/20 °C	205	261	312	276	353	426
600	**75/65/20 °C**	**478**	**621**	**757**	**630**	**836**	**1034**
	55/45/20 °C	246	313	374	331	424	511
700	**75/65/20 °C**	**558**	**725**	**883**	**735**	**976**	**1206**
	55/45/20 °C	287	366	436	386	495	596
800	**75/65/20 °C**	**638**	**828**	**1009**	**840**	**1115**	**1378**
	55/45/20 °C	328	418	499	441	565	681
900	**75/65/20 °C**	**717**	**932**	**1135**	**945**	**1255**	**1551**
	55/45/20 °C	369	470	561	496	636	766
1000	**75/65/20 °C**	**797**	**1035**	**1261**	**1050**	**1394**	**1723**
	55/45/20 °C	410	522	623	552	707	851
1100	**75/65/20 °C**	**877**	**1139**	**1387**	**1155**	**1533**	**1895**
	55/45/20 °C	451	574	685	607	777	936
1200	**75/65/20 °C**	**956**	**1242**	**1513**	**1260**	**1673**	**2068**
	55/45/20 °C	492	626	748	662	848	1022
1300	**75/65/20 °C**	**1036**	**1346**	**1639**	**1365**	**1812**	**2240**
	55/45/20 °C	533	679	810	717	919	1107
1400	**75/65/20 °C**	**1116**	**1449**	**1765**	**1470**	**1952**	**2412**
	55/45/20 °C	574	731	872	772	990	1192
1600	**75/65/20 °C**	**1275**	**1656**	**2018**	**1680**	**2230**	**2757**
	55/45/20 °C	656	835	997	883	1130	1362
1800	**75/65/20 °C**	**1435**	**1863**	**2270**	**1890**	**2509**	**3101**
	55/45/20 °C	739	940	1122	993	1272	1532
2000	**75/65/20 °C**	**1594**	**2070**	**2522**	**2100**	**2788**	**3446**
	55/45/20 °C	821	1044	1246	1103	1413	1703
2200	**75/65/20 °C**	**1753**	**2277**	**2774**	**2310**	**3067**	**3791**
	55/45/20 °C	902	1148	1371	1214	1555	1873
2400	**75/65/20 °C**	**1913**	**2484**	**3026**	**2520**	**3346**	**4135**
	55/45/20 °C	985	1253	1495	1324	1696	2043
2600	**75/65/20 °C**	**2072**	**2691**	**3279**	**2730**	**3624**	**4480**
	55/45/20 °C	1067	1357	1620	1434	1837	2214
2800	**75/65/20 °C**	**2232**	**2898**	**3531**	**2940**	**3903**	**4824**
	55/45/20 °C	1149	1462	1745	1545	1979	2384
3000	**75/65/20 °C**	**2391**	**3105**	**3783**	**3150**	**4182**	**5169**
	55/45/20 °C	1231	1566	1869	1655	2120	2554
3200	**75/65/20 °C**	**2550**	**3312**	**4035**	**3360**	**4461**	**5514**
	55/45/20 °C	1313	1670	1994	1765	2261	2725
3400	**75/65/20 °C**	**2710**	**3519**	**4287**	**3570**	**4740**	**5858**
	55/45/20 °C	1395	1775	2118	1876	2403	2895
3600	**75/65/20 °C**	**2869**	**3726**	**4540**	**3780**	**5018**	**6203**
	55/45/20 °C	1477	1879	2243	1986	2544	3065
3800	**75/65/20 °C**	**3029**	**3933**	**4792**	**3990**	**5297**	**6547**
	55/45/20 °C	1559	1984	2368	2096	2685	3235
4000	**75/65/20 °C**	**3188**	**4140**	**5044**	**4200**	**5576**	**6892**
	55/45/20 °C	1641	2088	2492	2207	2827	3406

Thermal output of the radiators [W] in accordance with EN 442 for parameters 75/65/20 °C and 55/45/20 °C.

exponent n	**1.30**	**1.34**	**1.38**	**1.26**	**1.33**	**1.38**

NARBONNE VT

RADIATOR DESCRIPTION - AN EXAMPLE : **NARBONNE VT 34 142 1600**

name
type
height
length

depth [mm]		245 mm 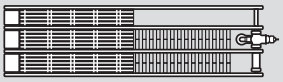			232 mm 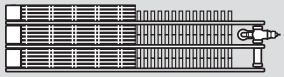		
length [mm]	height [mm]	142	214	286	142	214	286
	$t_z / t_p / t_i$	NA-S 34	NA-S 34	NA-S 34	NA 35	NA 35	NA 35
		[W]	[W]	[W]	[W]	[W]	[W]
500	**75/65/20 °C**	**525**	**697**	**862**	**599**	**826**	**986**
	55/45/20 °C	276	353	426	310	414	482
600	**75/65/20 °C**	**630**	**836**	**1034**	**718**	**991**	**1183**
	55/45/20 °C	331	424	511	371	497	579
700	**75/65/20 °C**	**735**	**976**	**1206**	**838**	**1156**	**1380**
	55/45/20 °C	386	495	596	434	580	675
800	**75/65/20 °C**	**840**	**1115**	**1378**	**958**	**1321**	**1577**
	55/45/20 °C	441	565	681	496	663	771
900	**75/65/20 °C**	**945**	**1255**	**1551**	**1077**	**1486**	**1774**
	55/45/20 °C	496	636	766	557	746	868
1000	**75/65/20 °C**	**1050**	**1394**	**1723**	**1197**	**1651**	**1971**
	55/45/20 °C	552	707	851	619	828	964
1100	**75/65/20 °C**	**1155**	**1533**	**1895**	**1317**	**1816**	**2168**
	55/45/20 °C	607	777	936	681	911	1060
1200	**75/65/20 °C**	**1260**	**1673**	**2068**	**1436**	**1981**	**2365**
	55/45/20 °C	662	848	1022	743	994	1157
1300	**75/65/20 °C**	**1365**	**1812**	**2240**	**1556**	**2146**	**2562**
	55/45/20 °C	717	919	1107	805	1077	1253
1400	**75/65/20 °C**	**1470**	**1952**	**2412**	**1676**	**2311**	**2759**
	55/45/20 °C	772	990	1192	867	1160	1349
1600	**75/65/20 °C**	**1680**	**2230**	**2757**	**1915**	**2642**	**3154**
	55/45/20 °C	883	1130	1362	991	1326	1543
1800	**75/65/20 °C**	**1890**	**2509**	**3101**	**2155**	**2972**	**3548**
	55/45/20 °C	993	1272	1532	1115	1491	1735
2000	**75/65/20 °C**	**2100**	**2788**	**3446**	**2394**	**3302**	**3942**
	55/45/20 °C	1103	1413	1703	1239	1657	1928
2200	**75/65/20 °C**	**2310**	**3067**	**3791**	**2633**	**3632**	**4336**
	55/45/20 °C	1214	1555	1873	1362	1822	2121
2400	**75/65/20 °C**	**2520**	**3346**	**4135**	**2873**	**3962**	**4730**
	55/45/20 °C	1324	1696	2043	1486	1988	2314
2600	**75/65/20 °C**	**2730**	**3624**	**4480**	**3112**	**4293**	**5125**
	55/45/20 °C	1434	1837	2214	1610	2154	2507
2800	**75/65/20 °C**	**2940**	**3903**	**4824**	**3352**	**4623**	**5519**
	55/45/20 °C	1545	1979	2384	1734	2320	2699
3000	**75/65/20 °C**	**3150**	**4182**	**5169**	**3591**	**4953**	**5913**
	55/45/20 °C	1655	2120	2554	1858	2485	2892
3200	**75/65/20 °C**	**3360**	**4461**	**5514**	**3830**	**5283**	**6307**
	55/45/20 °C	1765	2261	2725	1982	2651	3085
3400	**75/65/20 °C**	**3570**	**4740**	**5858**	**4070**	**5613**	**6701**
	55/45/20 °C	1876	2403	2895	2106	2816	3278
3600	**75/65/20 °C**	**3780**	**5018**	**6203**	**4309**	**5944**	**7096**
	55/45/20 °C	1986	2544	3065	2229	2983	3471
3800	**75/65/20 °C**	**3990**	**5297**	**6547**	**4549**	**6274**	**7490**
	55/45/20 °C	2096	2685	3235	2354	3148	3663
4000	**75/65/20 °C**	**4200**	**5576**	**6892**	**4788**	**6604**	**7884**
	55/45/20 °C	2207	2827	3406	2477	3314	3856

Thermal output of the radiators [W] in accordance with EN 442 for parameters 75/65/20 °C and 55/45/20 °C.

exponent n	**1.26**	**1.33**	**1.38**	**1.29**	**1.35**	**1.40**

NARBONNE VT

RADIATOR DESCRIPTION - AN EXAMPLE : **NARBONNE VT 46 142 1600**

name
type
height
length

depth [mm]		257 mm 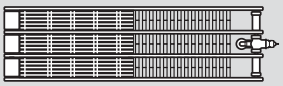			327 mm 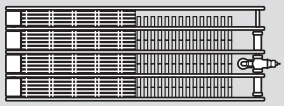		
length [mm]	height [mm]	142	214	286	142	214	286
	$t_z / t_p / t_i$	NA 46	NA 46	NA 46	NA-S 47	NA-S 47	NA-S 47
		[W]	[W]	[W]	[W]	[W]	[W]
500	**75/65/20 °C** 55/45/20 °C	**727** 374	**1036** 517	**1224** 599	**761** 400	**1151** 575	**1334** 656
600	**75/65/20 °C** 55/45/20 °C	**872** 449	**1243** 621	**1468** 718	**913** 480	**1381** 689	**1600** 787
700	**75/65/20 °C** 55/45/20 °C	**1018** 524	**1450** 724	**1713** 838	**1065** 560	**1611** 804	**1867** 918
800	**75/65/20 °C** 55/45/20 °C	**1163** 599	**1658** 828	**1958** 958	**1218** 640	**1842** 920	**2134** 1049
900	**75/65/20 °C** 55/45/20 °C	**1309** 674	**1865** 931	**2202** 1077	**1370** 720	**2072** 1034	**2400** 1180
1000	**75/65/20 °C** 55/45/20 °C	**1454** 748	**2072** 1034	**2447** 1197	**1522** 800	**2302** 1149	**2667** 1311
1100	**75/65/20 °C** 55/45/20 °C	**1599** 823	**2279** 1138	**2692** 1317	**1674** 879	**2532** 1264	**2934** 1442
1200	**75/65/20 °C** 55/45/20 °C	**1745** 898	**2486** 1241	**2936** 1436	**1826** 959	**2762** 1379	**3200** 1573
1300	**75/65/20 °C** 55/45/20 °C	**1890** 973	**2694** 1345	**3181** 1556	**1979** 1040	**2993** 1494	**3467** 1704
1400	**75/65/20 °C** 55/45/20 °C	**2036** 1048	**2901** 1448	**3426** 1676	**2131** 1120	**3223** 1609	**3734** 1836
1600	**75/65/20 °C** 55/45/20 °C	**2326** 1197	**3315** 1655	**3915** 1915	**2435** 1279	**3683** 1839	**4267** 2098
1800	**75/65/20 °C** 55/45/20 °C	**2617** 1347	**3730** 1862	**4405** 2155	**2740** 1440	**4144** 2069	**4801** 2360
2000	**75/65/20 °C** 55/45/20 °C	**2908** 1497	**4144** 2069	**4894** 2394	**3044** 1599	**4604** 2298	**5334** 2622
2200	**75/65/20 °C** 55/45/20 °C	**3199** 1647	**4558** 2275	**5383** 2633	**3348** 1759	**5064** 2528	**5867** 2884
2400	**75/65/20 °C** 55/45/20 °C	**3490** 1796	**4973** 2483	**5873** 2873	**3653** 1919	**5525** 2758	**6401** 3147
2600	**75/65/20 °C** 55/45/20 °C	**3780** 1946	**5387** 2689	**6362** 3112	**3957** 2079	**5985** 2988	**6934** 3409
2800	**75/65/20 °C** 55/45/20 °C	**4071** 2096	**5802** 2896	**6852** 3351	**4262** 2239	**6446** 3218	**7468** 3671
3000	**75/65/20 °C** 55/45/20 °C	**4362** 2245	**6216** 3103	**7341** 3591			
3200	**75/65/20 °C** 55/45/20 °C						
3400	**75/65/20 °C** 55/45/20 °C						
3600	**75/65/20 °C** 55/45/20 °C						
3800	**75/65/20 °C** 55/45/20 °C						
4000	**75/65/20 °C** 55/45/20 °C						

Thermal output of the radiators [W] in accordance with EN 442 for parameters 75/65/20 °C and 55/45/20 °C.

exponent n	**1.29**	**1.35**	**1.40**	**1.26**	**1.36**	**1.39**

NARBONNE VT

RADIATOR DESCRIPTION - AN EXAMPLE : **NARBONNE VT 11 358 1600**

name
type
height
length

depth [mm]		68 mm					
length [mm]	height [mm]	358	430	502	574	646	790
	$t_z / t_p / t_i$	NA 11	NA 11	NA 11	NA 11	NA 11	NA 11
		[W]	[W]	[W]	[W]	[W]	[W]
500	**75/65/20 °C**	**334**	**380**	**423**	**461**	**495**	**553**
	55/45/20 °C	172	196	217	235	252	279
600	**75/65/20 °C**	**400**	**456**	**507**	**553**	**593**	**663**
	55/45/20 °C	206	235	260	282	302	334
700	**75/65/20 °C**	**467**	**532**	**592**	**645**	**692**	**774**
	55/45/20 °C	240	274	303	329	353	390
800	**75/65/20 °C**	**534**	**608**	**676**	**737**	**791**	**884**
	55/45/20 °C	275	313	346	376	403	446
900	**75/65/20 °C**	**600**	**684**	**761**	**829**	**890**	**995**
	55/45/20 °C	309	352	390	422	453	502
1000	**75/65/20 °C**	**667**	**760**	**845**	**921**	**989**	**1105**
	55/45/20 °C	343	391	433	469	504	557
1100	**75/65/20 °C**	**734**	**836**	**930**	**1013**	**1088**	**1216**
	55/45/20 °C	378	430	476	516	554	613
1200	**75/65/20 °C**	**800**	**912**	**1014**	**1105**	**1187**	**1326**
	55/45/20 °C	412	469	519	563	605	669
1300	**75/65/20 °C**	**867**	**988**	**1099**	**1197**	**1286**	**1437**
	55/45/20 °C	446	509	563	610	655	725
1400	**75/65/20 °C**	**934**	**1064**	**1183**	**1289**	**1385**	**1547**
	55/45/20 °C	481	548	606	657	706	780
1600	**75/65/20 °C**	**1067**	**1216**	**1352**	**1474**	**1582**	**1768**
	55/45/20 °C	549	626	692	751	806	892
1800	**75/65/20 °C**	**1201**	**1368**	**1521**	**1658**	**1780**	**1989**
	55/45/20 °C	618	704	779	845	907	1003
2000	**75/65/20 °C**	**1334**	**1520**	**1690**	**1842**	**1978**	**2210**
	55/45/20 °C	687	782	865	939	1008	1115
2200	**75/65/20 °C**	**1467**	**1672**	**1859**	**2026**	**2176**	**2431**
	55/45/20 °C	755	861	952	1032	1109	1226
2400	**75/65/20 °C**	**1601**	**1824**	**2028**	**2210**	**2374**	**2652**
	55/45/20 °C	824	939	1039	1126	1210	1338
2600	**75/65/20 °C**	**1734**	**1976**	**2197**	**2395**	**2571**	**2873**
	55/45/20 °C	893	1017	1125	1220	1310	1449
2800	**75/65/20 °C**	**1868**	**2128**	**2366**	**2579**	**2769**	**3094**
	55/45/20 °C	962	1095	1212	1314	1411	1560
3000	**75/65/20 °C**	**2001**	**2280**	**2535**	**2763**	**2967**	**3315**
	55/45/20 °C	1030	1174	1298	1408	1512	1672
3200	**75/65/20 °C**	**2134**	**2432**	**2704**	**2947**	**3165**	
	55/45/20 °C	1098	1252	1385	1502	1613	
3400	**75/65/20 °C**	**2268**	**2584**	**2873**	**3131**	**3363**	
	55/45/20 °C	1167	1330	1471	1595	1714	
3600	**75/65/20 °C**	**2401**	**2736**	**3042**	**3316**	**3560**	
	55/45/20 °C	1236	1408	1558	1690	1814	
3800	**75/65/20 °C**	**2535**	**2888**	**3211**	**3500**	**3758**	
	55/45/20 °C	1356	1487	1644	1783	1915	
4000	**75/65/20 °C**	**2668**	**3040**	**3380**	**3684**	**3956**	
	55/45/20 °C	1373	1565	1731	1877	2016	

Thermal output of the radiators [W] in accordance with EN 442 for parameters 75/65/20 °C and 55/45/20 °C.

exponent n	**1.30**	**1.30**	**1.31**	**1.32**	**1.32**	**1.34**

NARBONNE VT

RADIATOR DESCRIPTION - AN EXAMPLE : **NARBONNE VT 22 358 1600**

name
type
height
length

depth [mm]		93 mm					
length [mm]	height [mm]	358	430	502	574	646	790
	$t_z / t_p / t_i$	NA 22	NA 22	NA 22	NA 22	NA 22	NA 22
		[W]	[W]	[W]	[W]	[W]	[W]
500	**75/65/20 °C**	**599**	**672**	**737**	**796**	**850**	**943**
	55/45/20 °C	302	337	368	395	420	459
600	**75/65/20 °C**	**718**	**806**	**884**	**955**	**1019**	**1132**
	55/45/20 °C	362	404	441	474	504	551
700	**75/65/20 °C**	**838**	**940**	**1032**	**1114**	**1189**	**1320**
	55/45/20 °C	423	472	515	553	588	642
800	**75/65/20 °C**	**958**	**1074**	**1179**	**1274**	**1359**	**1509**
	55/45/20 °C	483	539	589	633	672	734
900	**75/65/20 °C**	**1077**	**1209**	**1327**	**1433**	**1529**	**1697**
	55/45/20 °C	543	607	662	712	756	826
1000	**75/65/20 °C**	**1197**	**1343**	**1474**	**1592**	**1699**	**1886**
	55/45/20 °C	604	674	736	791	840	918
1100	**75/65/20 °C**	**1317**	**1477**	**1621**	**1751**	**1869**	**2075**
	55/45/20 °C	664	741	809	870	924	1010
1200	**75/65/20 °C**	**1436**	**1612**	**1769**	**1910**	**2039**	**2263**
	55/45/20 °C	724	809	883	949	1008	1101
1300	**75/65/20 °C**	**1556**	**1746**	**1916**	**2070**	**2209**	**2452**
	55/45/20 °C	785	876	956	1028	1092	1193
1400	**75/65/20 °C**	**1676**	**1880**	**2064**	**2229**	**2379**	**2640**
	55/45/20 °C	845	943	1030	1107	1176	1285
1600	**75/65/20 °C**	**1915**	**2149**	**2358**	**2547**	**2718**	**3018**
	55/45/20 °C	966	1078	1177	1265	1343	1469
1800	**75/65/20 °C**	**2155**	**2417**	**2653**	**2866**	**3058**	**3395**
	55/45/20 °C	1087	1213	1324	1423	1511	1652
2000	**75/65/20 °C**	**2394**	**2686**	**2948**	**3184**	**3398**	**3772**
	55/45/20 °C	1207	1348	1472	1581	1679	1836
2200	**75/65/20 °C**	**2633**	**2955**	**3243**	**3502**	**3738**	**4149**
	55/45/20 °C	1328	1483	1619	1739	1847	2019
2400	**75/65/20 °C**	**2873**	**3223**	**3538**	**3821**	**4078**	**4526**
	55/45/20 °C	1449	1617	1766	1898	2015	2202
2600	**75/65/20 °C**	**3112**	**3492**	**3832**	**4139**	**4417**	**4904**
	55/45/20 °C	1570	1752	1913	2056	2183	2386
2800	**75/65/20 °C**	**3352**	**3760**	**4127**	**4458**	**4757**	**5281**
	55/45/20 °C	1691	1887	2060	2214	2351	2570
3000	**75/65/20 °C**	**3591**	**4029**	**4422**	**4776**	**5097**	**5658**
	55/45/20 °C	1811	2022	2208	2372	2519	2753
3200	**75/65/20 °C**	**3830**	**4298**	**4717**	**5094**	**5437**	
	55/45/20 °C	1932	2157	2355	2530	2687	
3400	**75/65/20 °C**	**4070**	**4566**	**5012**	**5413**	**5777**	
	55/45/20 °C	2053	2291	2502	2688	2855	
3600	**75/65/20 °C**	**4309**	**4835**	**5306**	**5731**	**6116**	
	55/45/20 °C	2173	2426	2649	2846	3022	
3800	**75/65/20 °C**	**4549**	**5103**	**5601**	**6050**	**6456**	
	55/45/20 °C	2294	2561	2796	3005	3190	
4000	**75/65/20 °C**	**4788**	**5372**	**5896**	**6368**	**6796**	
	55/45/20 °C	2415	2696	2943	3163	3358	

Thermal output of the radiators [W] in accordance with EN 442 for parameters 75/65/20 °C and 55/45/20 °C.

exponent n	**1.34**	**1.35**	**1.36**	**1.37**	**1.38**	**1.41**

Notes

NARBONNE V

Narbonne V are composed of several interconnected profiled steel heating elements of a rectangular cross section. Each radiator has got four connecting openings, each with internal thread G ½", enabling side connection, both from the left- and the right-hand side. Narbonne radiators are equipped with two side covers, but no top masking grille.
Narbonne V radiators have, as a standard, mounting hangers welded on their backs. Most models are equipped with convection elements, increasing the heating efficiency of the radiators.

technical specification

- Material : high quality steel profiles of a rectangular cross section, dimensions: 70 x 11 x 1.5 mm (high pressure version: 70 x 11 x 2.0 mm)
- Height : 1600, 1800, 2000, 2200 mm
- Width : from 142 up to 862 mm
- Depth : from 68 up to 93 mm
- Connections : 4 x G ½", side connectors
- Max. operating pressure : 5 bar for the standard version, 8 bar for the high pressure version
- Max. temperature : 110°C
- Colour : RAL 9016, other RAL colours available, surcharge at each order
- Accessories : plug and air vent, included in the radiator's kit

NARBONNE V

front view

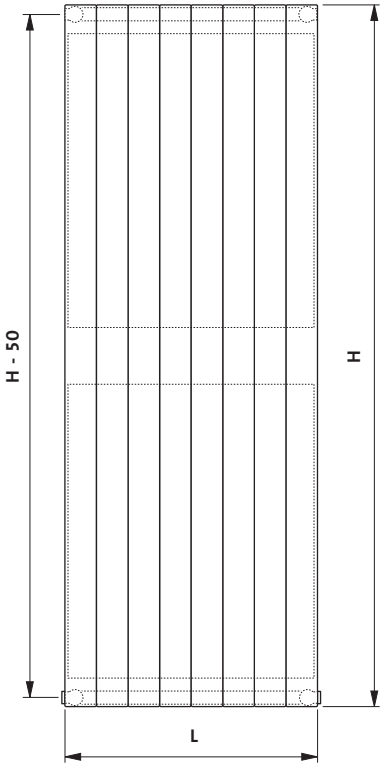

H - height [mm]
L - width [mm]

side view

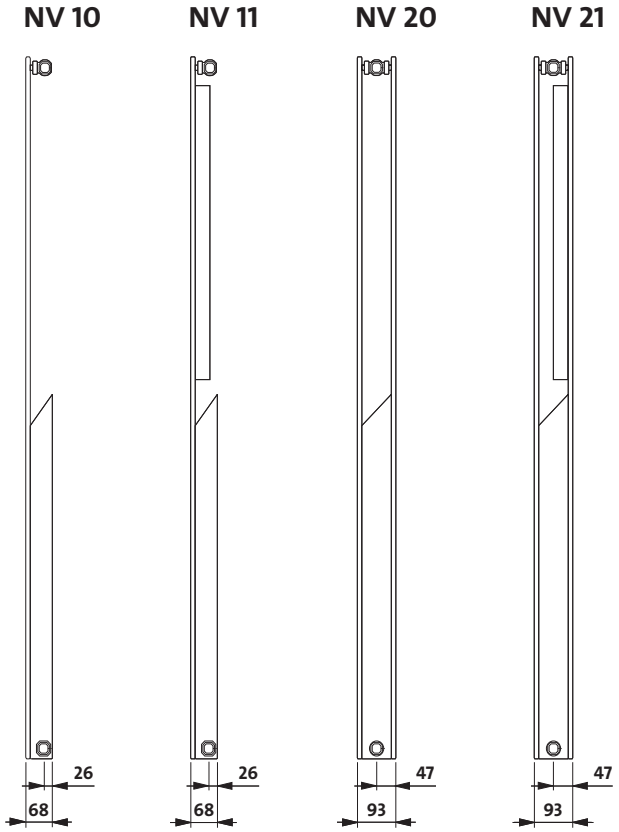

top view

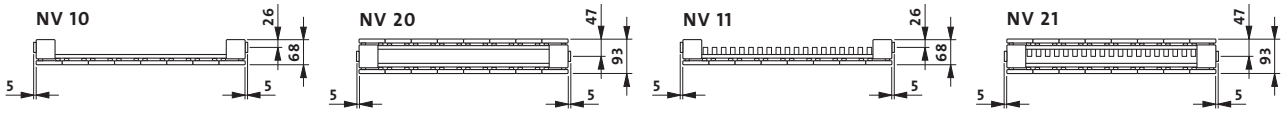

weight and water volume

weight : kg/m

type	height [mm]			
	1600	1800	2000	2200
NV 10	44.45	49.60	54.75	59.70
NV 11	63.39	68.53	73.69	78.83
NV 20	85.44	95.46	105.48	115.50
NV 21	104.37	114.39	124.42	134.44

water volume : l/m

type	height [mm]			
	1600	1800	2000	2200
NV 10	11.37	12.47	13.85	15.24
NV 11	11.37	12.47	13.85	15.24
NV 20	22.74	24.34	27.71	30.48
NV 21	22.74	24.34	27.71	30.48

type	NV 10	NV 11	NV 20	NV 21
height [mm]	1600; 1800; 2000; 2200	1600; 1800; 2000; 2200	1600; 1800; 2000; 2200	1600; 1800; 2000; 2200
width [mm]	142 – 862			
step	72 mm			

NARBONNE V

RADIATOR DESCRIPTION - AN EXAMPLE : **NARBONNE V 10 1600 430**

name
type
height
width

depth [mm]		68 mm			
width [mm]	height [mm]	1600	1800	2000	2200
	t_z / t_p / t_i	NV 10	NV 10	NV 10	NV 10
		[W]	[W]	[W]	[W]
142 (2)	**75/65/20 °C** 55/45/20 °C	**247** 121	**281** 137	**317** 156	**354** 175
214 (3)	**75/65/20 °C** 55/45/20 °C	**372** 182	**424** 207	**478** 235	**534** 264
286 (4)	**75/65/20 °C** 55/45/20 °C	**497** 243	**566** 277	**638** 314	**714** 353
358 (5)	**75/65/20 °C** 55/45/20 °C	**622** 304	**708** 346	**799** 393	**893** 441
430 (6)	**75/65/20 °C** 55/45/20 °C	**747** 365	**851** 416	**960** 472	**1073** 530
502 (7)	**75/65/20 °C** 55/45/20 °C	**872** 427	**993** 486	**1120** 551	**1253** 619
574 (8)	**75/65/20 °C** 55/45/20 °C	**998** 488	**1136** 556	**1281** 630	**1432** 708
646 (9)	**75/65/20 °C** 55/45/20 °C	**1123** 549	**1278** 625	**1442** 709	**1612** 797
718 (10)	**75/65/20 °C** 55/45/20 °C	**1248** 610	**1421** 695	**1603** 788	**1791** 885
790 (11)	**75/65/20 °C** 55/45/20 °C	**1373** 672	**1563** 764	**1763** 867	**1971** 974
862 (12)	**75/65/20 °C** 55/45/20 °C	**1498** 733	**1706** 834	**1924** 946	**2151** 1063

Thermal output of the radiators [W] in accordance with EN 442 for parameters 75/65/20 °C and 55/45/20 °C.

exponent n	**1.40**	**1.40**	**1.39**	**1.38**

NARBONNE V

RADIATOR DESCRIPTION - AN EXAMPLE : **NARBONNE V 10 1600 430**

name
type
height
width

depth [mm]		68 mm			
width [mm]	height [mm]	1600	1800	2000	2200
	t_z / t_p / t_i	NV 11	NV 11	NV 11	NV 11
		[W]	[W]	[W]	[W]
142 (2)	**75/65/20 °C** 55/45/20 °C	**281** 140	**314** 156	**348** 174	**384** 194
214 (3)	**75/65/20 °C** 55/45/20 °C	**424** 211	**473** 235	**524** 262	**578** 292
286 (4)	**75/65/20 °C** 55/45/20 °C	**566** 281	**632** 314	**701** 350	**773** 389
358 (5)	**75/65/20 °C** 55/45/20 °C	**708** 352	**791** 393	**877** 438	**967** 488
430 (6)	**75/65/20 °C** 55/45/20 °C	**851** 423	**950** 472	**1054** 526	**1161** 586
502 (7)	**75/65/20 °C** 55/45/20 °C	**993** 493	**1109** 551	**1230** 614	**1356** 684
574 (8)	**75/65/20 °C** 55/45/20 °C	**1136** 564	**1268** 630	**1406** 702	**1550** 782
646 (9)	**75/65/20 °C** 55/45/20 °C	**1278** 635	**1427** 709	**1583** 790	**1745** 880
718 (10)	**75/65/20 °C** 55/45/20 °C	**1421** 706	**1586** 788	**1759** 878	**1939** 978
790 (11)	**75/65/20 °C** 55/45/20 °C	**1563** 776	**1745** 867	**1936** 966	**2134** 1076
862 (12)	**75/65/20 °C** 55/45/20 °C	**1706** 847	**1904** 946	**2112** 1054	**2328** 1174

Thermal output of the radiators [W] in accordance with EN 442 for parameters 75/65/20 °C and 55/45/20 °C.

exponent n	**1.37**	**1.37**	**1.36**	**1.34**

NARBONNE V

RADIATOR DESCRIPTION - AN EXAMPLE : **NARBONNE V 20 1600 430**

name
type
height
width

depth [mm]		93 mm 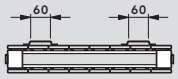			
width [mm]	height [mm]	1600	1800	2000	2200
	t_z / t_p / t_i	NV 20	NV 20	NV 20	NV 20
		[W]	[W]	[W]	[W]
142 (2)	**75/65/20 °C** 55/45/20 °C	**416** 202	**469** 229	**521** 256	**575** 284
214 (3)	**75/65/20 °C** 55/45/20 °C	**627** 305	**706** 345	**786** 386	**866** 428
286 (4)	**75/65/20 °C** 55/45/20 °C	**839** 408	**944** 462	**1050** 516	**1157** 572
358 (5)	**75/65/20 °C** 55/45/20 °C	**1050** 511	**1182** 578	**1315** 646	**1449** 716
430 (6)	**75/65/20 °C** 55/45/20 °C	**1261** 614	**1419** 694	**1579** 776	**1740** 860
502 (7)	**75/65/20 °C** 55/45/20 °C	**1472** 716	**1657** 810	**1843** 906	**2031** 1004
574 (8)	**75/65/20 °C** 55/45/20 °C	**1683** 819	**1895** 927	**2108** 1036	**2322** 1147
646 (9)	**75/65/20 °C** 55/45/20 °C	**1894** 922	**2132** 1043	**2372** 1166	**2614** 1292
718 (10)	**75/65/20 °C** 55/45/20 °C	**2105** 1024	**2370** 1159	**2636** 1296	**2905** 1435
790 (11)	**75/65/20 °C** 55/45/20 °C	**2316** 1127	**2608** 1276	**2901** 1426	**3196** 1579
862 (12)	**75/65/20 °C** 55/45/20 °C	**2527** 1230	**2845** 1392	**3165** 1556	**3488** 1724

Thermal output of the radiators [W] in accordance with EN 442 for parameters 75/65/20 °C and 55/45/20 °C.

exponent n	**1.41**	**1.40**	**1.39**	**1.38**

NARBONNE V

RADIATOR DESCRIPTION - AN EXAMPLE : **NARBONNE V 21 1600 430**

name
type
height
width

depth [mm]		93 mm 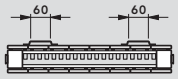			
width [mm]	height [mm]	1600	1800	2000	2200
	t_z / t_p / t_i	NV 21	NV 21	NV 21	NV 21
		[W]	[W]	[W]	[W]
142 (2)	**75/65/20 °C** 55/45/20 °C	**452** 221	**510** 249	**570** 282	**633** 316
214 (3)	**75/65/20 °C** 55/45/20 °C	**681** 333	**768** 376	**859** 424	**953** 476
286 (4)	**75/65/20 °C** 55/45/20 °C	**911** 446	**1026** 502	**1147** 567	**1274** 636
358 (5)	**75/65/20 °C** 55/45/20 °C	**1140** 558	**1285** 629	**1436** 710	**1595** 796
430 (6)	**75/65/20 °C** 55/45/20 °C	**1369** 670	**1543** 755	**1725** 852	**1916** 956
502 (7)	**75/65/20 °C** 55/45/20 °C	**1598** 782	**1801** 881	**2014** 995	**2236** 1116
574 (8)	**75/65/20 °C** 55/45/20 °C	**1828** 894	**2060** 1008	**2303** 1138	**2557** 1276
646 (9)	**75/65/20 °C** 55/45/20 °C	**2057** 1006	**2318** 1134	**2592** 1281	**2879** 1437
718 (10)	**75/65/20 °C** 55/45/20 °C	**2286** 1118	**2576** 1260	**2881** 1424	**3199** 1597
790 (11)	**75/65/20 °C** 55/45/20 °C	**2515** 1230	**2835** 1387	**3169** 1566	**3520** 1757
862 (12)	**75/65/20 °C** 55/45/20 °C	**2745** 1343	**3093** 1513	**3458** 1709	**3840** 1917

Thermal output of the radiators [W] in accordance with EN 442 for parameters 75/65/20 °C and 55/45/20 °C.

exponent n	**1.40**	**1.40**	**1.38**	**1.36**

NARBONNE V VT

Narbonne V VT are composed of several interconnected profiled steel heating elements of a rectangular cross section. Each radiator has got two bottom connecting openings, each with external thread G ¾", enabling bottom connection. Four side openings with internal thread G ½" are normally designed for mounting the Danfoss thermostatic valve insert with pre-regulation, plus the air vent and closing plugs. Narbonne V VT radiators are equipped with two side covers, but no top masking grille.
Narbonne V VT radiators have, as a standard, mounting hangers welded on their backs.
Most models are equipped with convection elements, increasing the heating efficiency of the radiators.

technical specification

- Material : high quality steel profiles of a rectangular cross section, dimensions: 70 x 11 x 1.5 mm (high pressure version: 70 x 11 x 2.0 mm)
- Height : 1600, 1800, 2000 mm
- Width : from 214 up to 862 mm
- Depth : from 68 up to 93 mm
- Connections : 2 x G ¾" bottom, 4 x G ½" side
- Max. operating pressure : 5 bar for the standard version, 8 bar for the high pressure version
- Max. temperature : 110°C
- Colour : RAL 9016, other RAL colours available, surcharge at each order
- Accessories : plug and air vent, Danfoss thermostatic valve insert included in the radiator's kit

NARBONNE V VT

front view

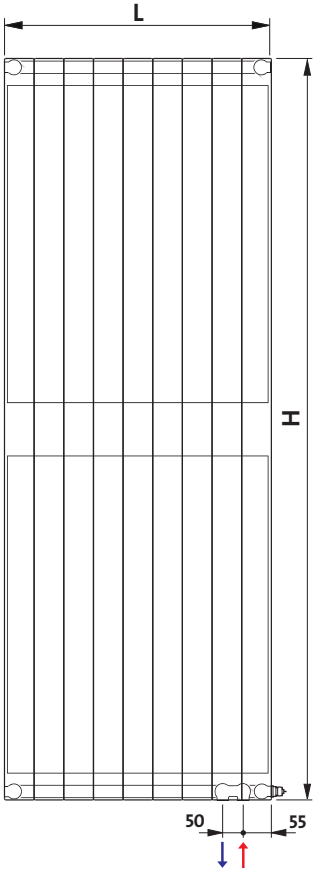

H - height [mm]
L - width [mm]

side view

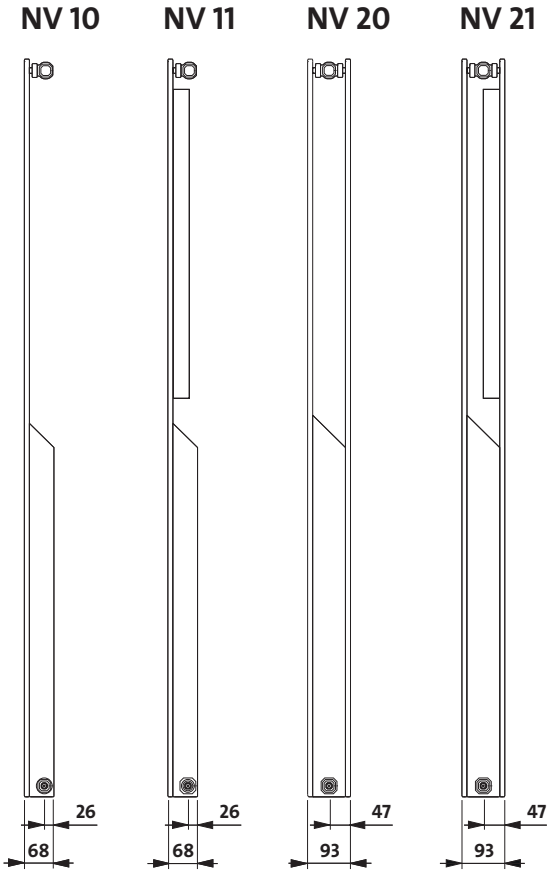

top view

Note: the diagrams show the right-hand side versions of the radiators.

weight and water volume

weight : kg/m

type	height [mm]		
	1600	1800	2000
NV 10	44.45	49.60	54.75
NV 11	63.39	68.53	73.69
NV 20	85.44	95.46	105.48
NV 21	104.37	114.39	124.42

water volume : l/m

type	height [mm]		
	1600	1800	2000
NV 10	11.37	12.47	13.85
NV 11	11.37	12.47	13.85
NV 20	22.74	24.34	27.71
NV 21	22.74	24.34	27.71

type	NV 10	NV 11	NV 20	NV 21
height [mm]	1600; 1800; 2000	1600; 1800; 2000	1600; 1800; 2000	1600; 1800; 2000
width [mm]	214 – 862			
step	72 mm			

NARBONNE V VT

Proper initial preset can be easily and precisely obtained with no necessity of using any dedicated tools (see the diagrams below).

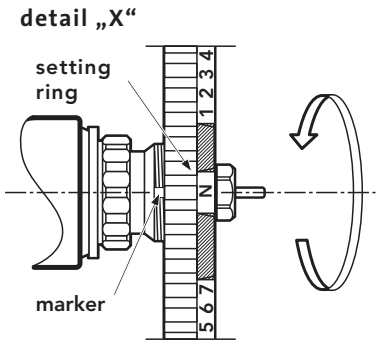

Danfoss valve insert
no. 013G0360

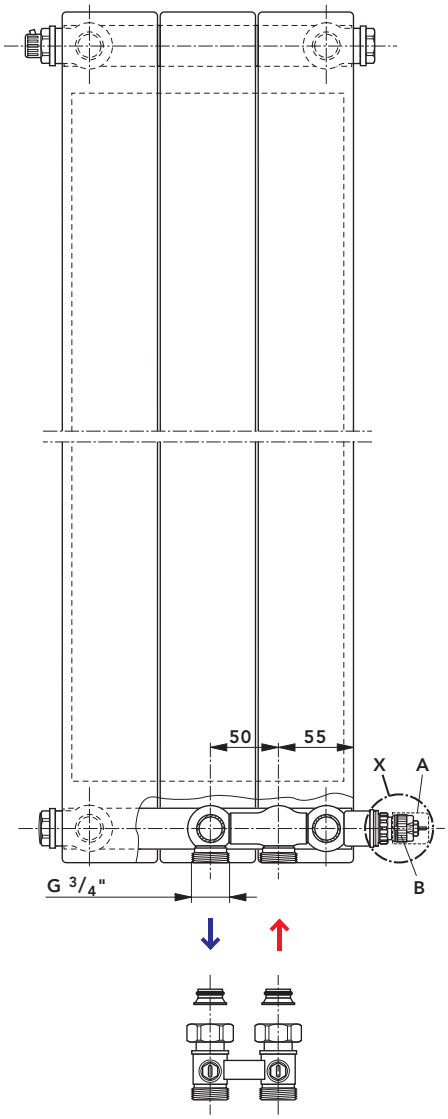

Note!!!: Narbonne V VT connection (supply and return) is opposite to Narbonne VT!

After the valve's masking cover has been removed (pos. A), a built-in valve insert (not included in the radiator's set) will be mounted (pos. B):
Danfoss (RA 2994, RAW 5115), **Oventrop Uni XD**, **Heimeier VK**, **Herz D**, **Honeywell thera-DA**.

Tips for setting:

- remove the plastic valve's masking cover;
- rotate the setting ring to achieve the required setting (1, 2,...7, N) opposite the marker;
- the preset can be adjusted in the range between 1 and 7, with the resolution of 0.5 of the scale. The factory default preset values correspond to the highest kv value, which in turn corresponds to the "N" setting.

Note: adjustment of preset values between the scale's elements, in the crossed-out area, is not allowed!

NARBONNE V VT

RADIATOR DESCRIPTION - AN EXAMPLE : **NARBONNE V VT 10 1600 430**

name
type
height
width

depth [mm]		68 mm			68 mm		
width [mm]	height [mm]	1600	1800	2000	1600	1800	2000
	t_z / t_p / t_i	NV 10	NV 10	NV 10	NV 11	NV 11	NV 11
		[W]	[W]	[W]	[W]	[W]	[W]
214 (3)	**75/65/20 °C** 55/45/20 °C	**372** 182	**424** 207	**478** 235	**424** 211	**473** 235	**524** 262
286 (4)	**75/65/20 °C** 55/45/20 °C	**497** 243	**566** 277	**638** 314	**566** 281	**632** 314	**701** 350
358 (5)	**75/65/20 °C** 55/45/20 °C	**622** 304	**708** 346	**799** 393	**708** 352	**791** 393	**877** 438
430 (6)	**75/65/20 °C** 55/45/20 °C	**747** 365	**851** 416	**960** 472	**851** 423	**950** 472	**1054** 526
502 (7)	**75/65/20 °C** 55/45/20 °C	**872** 427	**993** 486	**1120** 551	**993** 493	**1109** 551	**1230** 614
574 (8)	**75/65/20 °C** 55/45/20 °C	**998** 488	**1136** 556	**1281** 630	**1136** 564	**1268** 630	**1406** 702
646 (9)	**75/65/20 °C** 55/45/20 °C	**1123** 549	**1278** 625	**1442** 709	**1278** 635	**1427** 709	**1583** 790
718 (10)	**75/65/20 °C** 55/45/20 °C	**1248** 610	**1421** 695	**1603** 788	**1421** 706	**1586** 788	**1759** 878
790 (11)	**75/65/20 °C** 55/45/20 °C	**1373** 672	**1563** 764	**1763** 867	**1563** 776	**1745** 867	**1936** 966
862 (12)	**75/65/20 °C** 55/45/20 °C	**1498** 733	**1706** 834	**1924** 946	**1706** 847	**1904** 946	**2112** 1054

Thermal output of the radiators [W] in accordance with EN 442 for parameters 75/65/20 °C and 55/45/20 °C.

exponent n	**1.40**	**1.40**	**1.39**	**1.37**	**1.37**	**1.36**

NARBONNE V VT

RADIATOR DESCRIPTION - AN EXAMPLE : **NARBONNE V VT 20 1600 430**

name
type
height
width

depth [mm]		93 mm 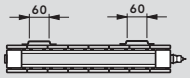			93 mm 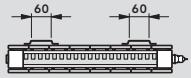		
width [mm]	height [mm]	1600	1800	2000	1600	1800	2000
	$t_z / t_p / t_i$	NV 20	NV 20	NV 20	NV 21	NV 21	NV 21
		[W]	[W]	[W]	[W]	[W]	[W]
214 (3)	**75/65/20 °C** 55/45/20 °C	**627** 305	**706** 345	**786** 386	**681** 333	**768** 376	**859** 424
286 (4)	**75/65/20 °C** 55/45/20 °C	**839** 408	**944** 462	**1050** 516	**911** 446	**1026** 502	**1147** 567
358 (5)	**75/65/20 °C** 55/45/20 °C	**1050** 511	**1182** 578	**1315** 646	**1140** 558	**1285** 629	**1436** 710
430 (6)	**75/65/20 °C** 55/45/20 °C	**1261** 614	**1419** 694	**1579** 776	**1369** 670	**1543** 755	**1725** 852
502 (7)	**75/65/20 °C** 55/45/20 °C	**1472** 716	**1657** 810	**1843** 906	**1598** 782	**1801** 881	**2014** 995
574 (8)	**75/65/20 °C** 55/45/20 °C	**1683** 819	**1895** 927	**2108** 1036	**1828** 894	**2060** 1008	**2303** 1138
646 (9)	**75/65/20 °C** 55/45/20 °C	**1894** 922	**2132** 1043	**2372** 1166	**2057** 1006	**2318** 1134	**2592** 1281
718 (10)	**75/65/20 °C** 55/45/20 °C	**2105** 1024	**2370** 1159	**2636** 1296	**2286** 1118	**2576** 1260	**2881** 1424
790 (11)	**75/65/20 °C** 55/45/20 °C	**2316** 1127	**2608** 1276	**2901** 1426	**2515** 1230	**2835** 1387	**3169** 1566
862 (12)	**75/65/20 °C** 55/45/20 °C	**2527** 1230	**2845** 1392	**3165** 1556	**2745** 1343	**3093** 1513	**3458** 1709

Thermal output of the radiators [W] in accordance with EN 442 for parameters 75/65/20 °C and 55/45/20 °C.

exponent n	**1.41**	**1.40**	**1.39**	**1.40**	**1.40**	**1.38**

Notes

NARBONNE M

Narbonne M radiators are composed of several interconnected profiled steel heating elements of rectangular cross sections Each radiator has two centrally located bottom connecting openings with G ¾" male threads that enable bottom connection. Three side openings with G ½" female threads are used as a standard to install a Danfoss thermostatic valve insert with pre-regulation, an air vent, and a blanking plug. Narbonne M radiators have two side covers and a top masking grille.
Up to and including the height of 286 mm, Narbonne M radiators are delivered without hangers, while models 358 mm to 790 mm high have, as a standard, installation hangers welded on the back of the radiator.
Narbonne M radiators in the WVO version, up to 286 mm high, type NA-S 22, 34, and 47, are equipped with a protective screen that reduces emission of heat towards the external partition located behind the radiator.

technical specification

- Material : high quality steel profiles of a rectangular cross section, dimensions: 70 x 11 x 1.5 mm (high pressure version: 70 x 11 x 2.0 mm)
- Height : 142, 214, 286, 358, 430, 502, 574, 646, 790 mm
- Length : from 500 up to 2400 mm
- Depth : from 68 up to 257 mm
- Connections : 2 x G ¾" bottom, middle; 3 x G ½" side
- Max. operating pressure : 5 bar for the standard version, 8 bar for the high pressure version
- Max. temperature : 110°C
- Colour : RAL 9016, other RAL colours available, surcharge at each order
- Brackets : wall or floor – ordered separately, at Client's preference
- Accessories : plug and air vent, Danfoss thermostatic valve insert included in the radiator's kit

NARBONNE M

front view

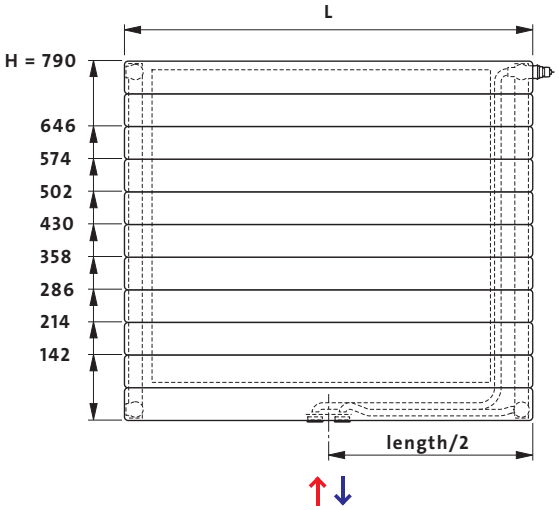

example side views

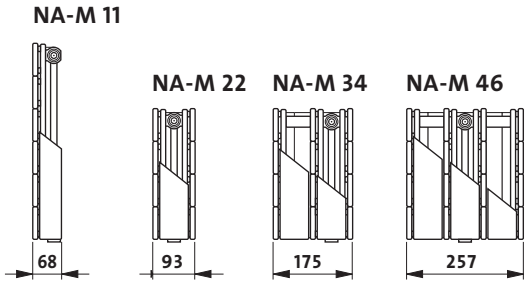

H - height [mm]
L - length [mm]

top view

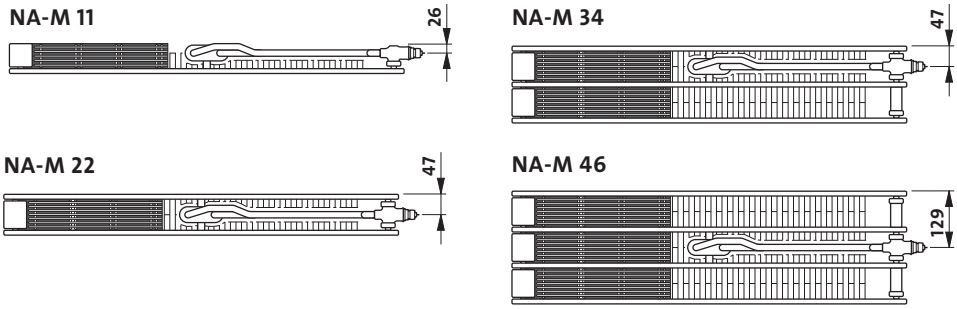

Note: the diagrams show the right-hand side versions of the radiators.

weight and water volume

weight : kg/m

type	height [mm]								
	142	214	286	358	430	502	574	646	790
NA-M 11	-	-	-	16.71	19.85	22.99	26.15	29.29	33.55
NA-M 22	-	20.59	27.23	30.89	36.93	42.96	49.01	55.05	63.06
NA-M 34	23.93	35.18	46.42	-	-	-	-	-	-
NA-M 46	33.89	49.76	65.62	-	-	-	-	-	-

water volume : l/m

type	height [mm]								
	142	214	286	358	430	502	574	646	790
NA-M 11	-	-	-	2.78	3.33	3.87	4.44	4.99	6.12
NA-M 22	-	3.34	4.44	5.55	6.66	7.77	8.88	9.99	12.22
NA-M 34	3.33	4.99	6.66	-	-	-	-	-	-
NA-M 46	4.53	6.79	9.06	-	-	-	-	-	-

type	NA-M 11	NA 22	NA 34	NA 46
height [mm]	358, 430; 502; 574; 646; 790	214; 286; 358, 430; 502; 574; 646; 790	142; 214; 286	142; 214; 286
length [mm]	500 - 2400 mm			
step	100 mm (200 mm from the length of 1400 mm)			

NARBONNE M

Proper initial preset can be easily and precisely obtained with no necessity of using any dedicated tools (see the diagrams below).

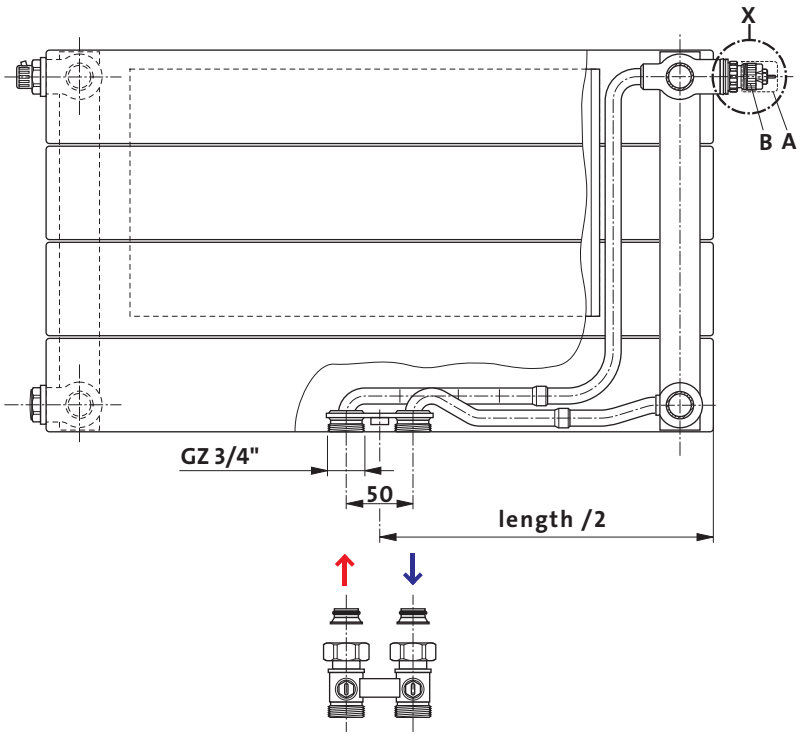

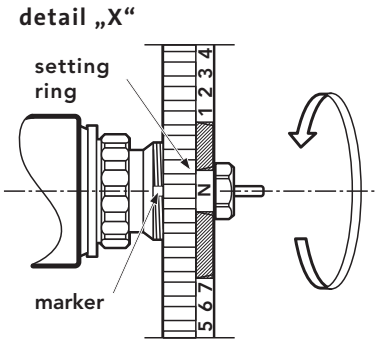

Danfoss valve insert
no. 013G0360

After the valve's masking cover has been removed (pos. A), a built-in valve insert (not included in the radiator's set) will be mounted (pos. B):
Danfoss (RA 2994, RAW 5115), **Oventrop Uni XD**, **Heimeier VK**, **Herz D**, **Honeywell thera-DA**.

Tips for setting:

- remove the plastic valve's masking cover;
- rotate the setting ring to achieve the required setting (1, 2,...7, N) opposite the marker;
- the preset can be adjusted in the range between 1 and 7, with the resolution of 0.5 of the scale. The factory default preset values correspond to the highest kv value, which in turn corresponds to the "N" setting.

Note: adjustment of preset values between the scale's elements, in the crossed-out area, is not allowed!

NARBONNE M

RADIATOR DESCRIPTION - AN EXAMPLE : **NARBONNE M 11 358 1600**

name
type
height
length

depth [mm]		68 mm					
length [mm]	height [mm]	358	430	502	574	646	790
	$t_z / t_p / t_i$	NA-M 11	NA-M 11	NA-M 11	NA-M 11	NA-M 11	NA-M 11
		[W]	[W]	[W]	[W]	[W]	[W]
500	**75/65/20 °C**	**313**	**359**	**402**	**443**	**483**	**553**
	55/45/20 °C	160	186	208	228	249	279
600	**75/65/20 °C**	**375**	**431**	**482**	**532**	**579**	**663**
	55/45/20 °C	192	223	249	274	298	334
700	**75/65/20 °C**	**438**	**503**	**563**	**620**	**676**	**774**
	55/45/20 °C	224	260	291	319	348	390
800	**75/65/20 °C**	**500**	**574**	**643**	**709**	**772**	**884**
	55/45/20 °C	256	297	333	365	397	446
900	**75/65/20 °C**	**563**	**646**	**724**	**797**	**869**	**995**
	55/45/20 °C	288	334	375	410	447	502
1000	**75/65/20 °C**	**625**	**718**	**804**	**886**	**965**	**1105**
	55/45/20 °C	320	371	416	456	497	557
1100	**75/65/20 °C**	**688**	**790**	**884**	**975**	**1062**	**1216**
	55/45/20 °C	352	409	457	502	547	613
1200	**75/65/20 °C**	**750**	**862**	**965**	**1063**	**1158**	**1326**
	55/45/20 °C	384	446	499	547	596	669
1300	**75/65/20 °C**	**813**	**933**	**1045**	**1152**	**1255**	**1437**
	55/45/20 °C	416	483	541	593	646	725
1400	**75/65/20 °C**	**875**	**1005**	**1126**	**1240**	**1351**	**1547**
	55/45/20 °C	448	520	583	638	695	780
1600	**75/65/20 °C**	**1000**	**1149**	**1286**	**1418**	**1544**	**1768**
	55/45/20 °C	512	594	665	730	795	892
1800	**75/65/20 °C**	**1125**	**1292**	**1447**	**1595**	**1737**	**1989**
	55/45/20 °C	576	668	749	821	894	1003
2000	**75/65/20 °C**	**1250**	**1436**	**1608**	**1772**	**1930**	**2210**
	55/45/20 °C	640	743	832	912	993	1115
2200	**75/65/20 °C**	**1375**	**1580**	**1769**	**1949**	**2123**	**2431**
	55/45/20 °C	704	817	915	1003	1093	1226
2400	**75/65/20 °C**	**1500**	**1723**	**1930**	**2126**	**2316**	**2652**
	55/45/20 °C	768	891	999	1094	1192	1338

Thermal output of the radiators [W] in accordance with EN 442 for parameters 75/65/20 °C and 55/45/20 °C.

exponent n	**1.31**	**1.29**	**1.29**	**1.30**	**1.30**	**1.34**

NARBONNE M

RADIATOR DESCRIPTION - AN EXAMPLE : **NARBONNE M 22 214 1600**

name
type
height
length

depth [mm]		93 mm		93 mm	
length [mm]	height [mm]	214	286	358	430
	$t_z / t_p / t_i$	NA-M 22	NA-M 22	NA-M 22	NA-M 22
		[W]	[W]	[W]	[W]
500	**75/65/20 °C**	**385**	**469**	**550**	**634**
	55/45/20 °C	197	239	277	321
600	**75/65/20 °C**	**461**	**563**	**660**	**761**
	55/45/20 °C	236	287	333	386
700	**75/65/20 °C**	**538**	**657**	**770**	**888**
	55/45/20 °C	276	335	388	450
800	**75/65/20 °C**	**615**	**750**	**880**	**1014**
	55/45/20 °C	315	382	444	514
900	**75/65/20 °C**	**692**	**844**	**990**	**1141**
	55/45/20 °C	354	430	499	578
1000	**75/65/20 °C**	**769**	**938**	**1100**	**1268**
	55/45/20 °C	394	478	555	643
1100	**75/65/20 °C**	**846**	**1032**	**1210**	**1395**
	55/45/20 °C	433	526	610	707
1200	**75/65/20 °C**	**923**	**1126**	**1320**	**1522**
	55/45/20 °C	473	574	666	772
1300	**75/65/20 °C**	**1000**	**1219**	**1430**	**1648**
	55/45/20 °C	512	621	721	835
1400	**75/65/20 °C**	**1077**	**1313**	**1540**	**1775**
	55/45/20 °C	552	669	777	900
1600	**75/65/20 °C**	**1230**	**1501**	**1760**	**2029**
	55/45/20 °C	630	765	888	1029
1800	**75/65/20 °C**	**1384**	**1688**	**1980**	**2282**
	55/45/20 °C	709	860	999	1157
2000	**75/65/20 °C**	**1538**	**1876**	**2200**	**2536**
	55/45/20 °C	788	956	1110	1286
2200	**75/65/20 °C**	**1692**	**2064**	**2420**	**2790**
	55/45/20 °C	867	1052	1221	1414
2400	**75/65/20 °C**	**1846**	**2251**	**2640**	**3043**
	55/45/20 °C	945	1147	1331	1543

Thermal output of the radiators [W] in accordance with EN 442 for parameters 75/65/20 °C and 55/45/20 °C.

exponent n	**1.31**	**1.32**	**1.34**	**1.33**

NARBONNE M

RADIATOR DESCRIPTION - AN EXAMPLE : **NARBONNE M 22 502 1600**

name
type
height
length

depth [mm]		93 mm			
length [mm]	height [mm]	502	574	646	790
	t_z / t_p / t_i	NA-M 22	NA-M 22	NA-M 22	NA-M 22
		[W]	[W]	[W]	[W]
500	**75/65/20 °C** 55/45/20 °C	**703** 355	**767** 385	**827** 413	**943** 459
600	**75/65/20 °C** 55/45/20 °C	**843** 425	**920** 462	**992** 495	**1132** 551
700	**75/65/20 °C** 55/45/20 °C	**984** 496	**1074** 539	**1158** 578	**1320** 642
800	**75/65/20 °C** 55/45/20 °C	**1124** 567	**1227** 616	**1323** 660	**1509** 734
900	**75/65/20 °C** 55/45/20 °C	**1265** 638	**1381** 693	**1489** 743	**1697** 826
1000	**75/65/20 °C** 55/45/20 °C	**1405** 709	**1534** 770	**1654** 826	**1886** 918
1100	**75/65/20 °C** 55/45/20 °C	**1546** 780	**1687** 846	**1819** 908	**2075** 1010
1200	**75/65/20 °C** 55/45/20 °C	**1686** 850	**1841** 924	**1985** 991	**2263** 1101
1300	**75/65/20 °C** 55/45/20 °C	**1827** 921	**1994** 1001	**2150** 1073	**2452** 1193
1400	**75/65/20 °C** 55/45/20 °C	**1967** 992	**2148** 1078	**2316** 1156	**2640** 1285
1600	**75/65/20 °C** 55/45/20 °C	**2248** 1134	**2454** 1231	**2646** 1321	**3018** 1469
1800	**75/65/20 °C** 55/45/20 °C	**2529** 1275	**2761** 1385	**2977** 1486	**3395** 1652
2000	**75/65/20 °C** 55/45/20 °C	**2810** 1417	**3068** 1539	**3308** 1651	**3772** 1836
2200	**75/65/20 °C** 55/45/20 °C	**3091** 1559	**3375** 1693	**3639** 1817	**4149** 2019
2400	**75/65/20 °C** 55/45/20 °C	**3372** 1701	**3682** 1848	**3970** 1982	**4526** 2202

Thermal output of the radiators [W] in accordance with EN 442 for parameters 75/65/20 °C and 55/45/20 °C.

exponent n	**1.34**	**1.35**	**1.36**	**1.41**

NARBONNE M

RADIATOR DESCRIPTION - AN EXAMPLE : **NARBONNE M 34 142 1600**

name
type
height
length

depth [mm]		175 mm			257 mm 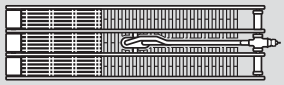		
length [mm]	height [mm]	142	214	286	142	214	286
	t_z / t_p / t_i	NA-M 34	NA-M 34	NA-M 34	NA-M 46	NA-M 46	NA-M 46
		[W]	[W]	[W]	[W]	[W]	[W]
500	**75/65/20 °C**	**477**	**679**	**808**	**717**	**948**	**1179**
	55/45/20 °C	247	346	403	369	478	586
600	**75/65/20 °C**	**572**	**814**	**970**	**860**	**1137**	**1414**
	55/45/20 °C	296	415	484	494	573	702
700	**75/65/20 °C**	**667**	**950**	**1131**	**1003**	**1327**	**1650**
	55/45/20 °C	345	484	565	516	669	820
800	**75/65/20 °C**	**762**	**1086**	**1293**	**1146**	**1516**	**1886**
	55/45/20 °C	394	553	645	590	765	937
900	**75/65/20 °C**	**858**	**1221**	**1454**	**1290**	**1706**	**2121**
	55/45/20 °C	444	622	726	664	860	1053
1000	**75/65/20 °C**	**953**	**1357**	**1616**	**1433**	**1895**	**2357**
	55/45/20 °C	493	691	807	738	956	1171
1100	**75/65/20 °C**	**1048**	**1493**	**1778**	**1576**	**2085**	**2593**
	55/45/20 °C	542	761	888	811	1052	1288
1200	**75/65/20 °C**	**1144**	**1628**	**1939**	**1720**	**2274**	**2828**
	55/45/20 °C	592	829	968	885	1147	1405
1300	**75/65/20 °C**	**1239**	**1764**	**2101**	**1863**	**2464**	**3064**
	55/45/20 °C	641	899	1049	959	1243	1522
1400	**75/65/20 °C**	**1334**	**1900**	**2262**	**2006**	**2653**	**3300**
	55/45/20 °C	690	968	1129	1033	1338	1639
1600	**75/65/20 °C**	**1525**	**2171**	**2586**	**2293**	**3032**	**3771**
	55/45/20 °C	789	1106	1291	1180	1529	1873
1800	**75/65/20 °C**	**1715**	**2443**	**2909**	**2579**	**3411**	**4243**
	55/45/20 °C	887	1245	1452	1328	1720	2107
2000	**75/65/20 °C**	**1906**	**2714**	**3232**	**2866**	**3790**	**4714**
	55/45/20 °C	986	1383	1613	1475	1911	2341
2200	**75/65/20 °C**	**2097**	**2985**	**3555**	**3153**	**4169**	**5185**
	55/45/20 °C	1085	1521	1775	1623	2103	2575
2400	**75/65/20 °C**	**2287**	**3257**	**3878**	**3439**	**4548**	**5657**
	55/45/20 °C	1183	1660	1936	1770	2294	2810

Thermal output of the radiators [W] in accordance with EN 442 for parameters 75/65/20 °C and 55/45/20 °C.

exponent n	**1.29**	**1.32**	**1.36**	**1.30**	**1.34**	**1.37**

Notes

NARBONNE V M

Narbonne V M radiators are composed of several interconnected profiled steel heating elements of rectangular cross sections Each radiator has two centrally located bottom connecting openings with G ½" female threads that enable bottom connection. Four side openings with G ½" female threads are used as a standard to install a vent and blanking plugs. Narbonne V M radiators have two side covers and no top cover.
Narbonne V M radiators have, as a standard, mounting hangers welded on their backs.

technical specification

- Material : high quality steel profiles of a rectangular cross section, dimensions: 70 x 11 x 1.5 mm (high pressure version: 70 x 11 x 2.0 mm)
- Height : 1600, 1800, 2000 mm
- Width : from 214 up to 862 mm
- Depth : 68 and 93 mm
- Connections : 2 x G ½" bottom, 4 x G ½" side
- Max. operating pressure : 5 bar for the standard version, 8 bar for the high pressure version
- Max. temperature : 110°C
- Colour : RAL 9016, other RAL colours available, surcharge at each order
- Accessories : plug and air vent, Danfoss thermostatic valve insert included in the radiator's kit

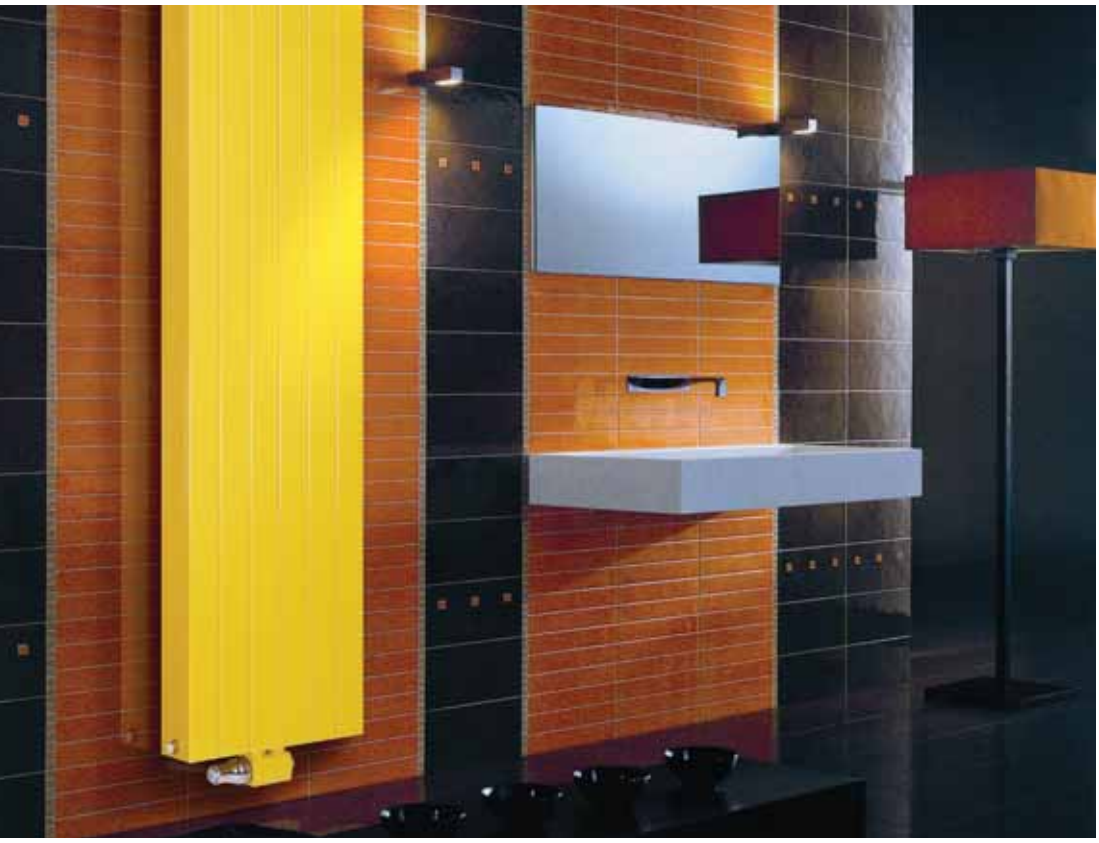

NARBONNE V M

front view

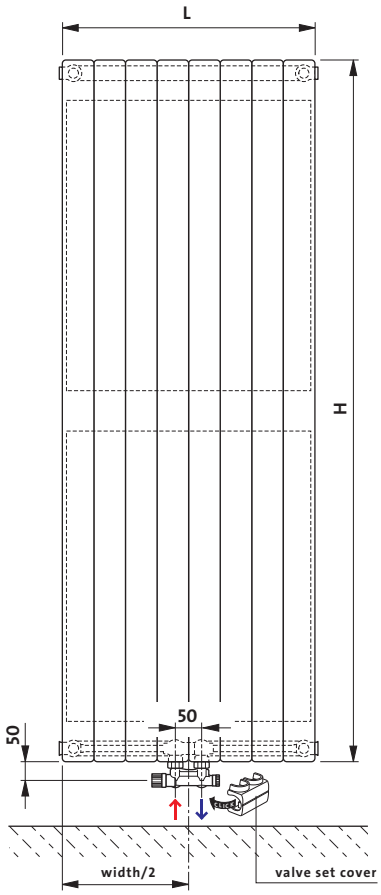

side view

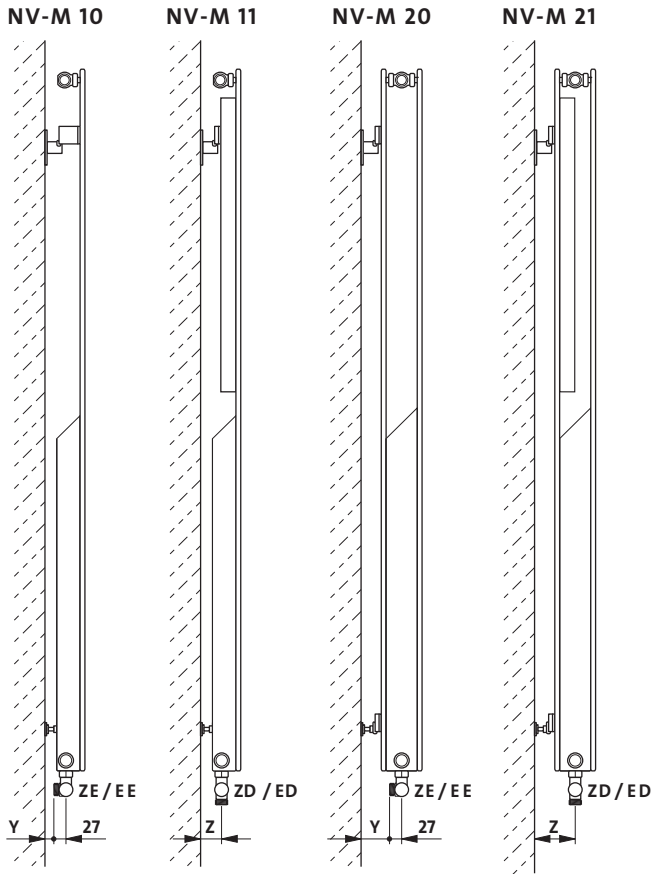

H - height [mm]
L - width [mm]

top view

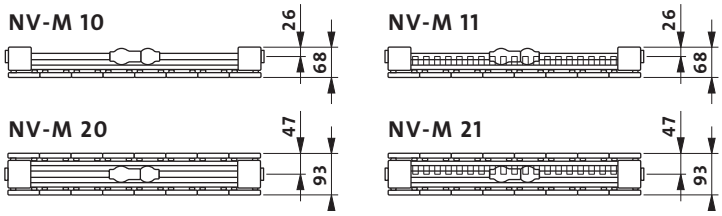

connection

- **ZE** angle connection to a two-pipe system
- **ZD** flow-through connection to a two-pipe system
- **EE** angle connection to a one-pipe system
- **ED** flow-through connection to a one-pipe system

angle connection		
hanger	type	dimension **Y** [mm]
*	NV-M 10	*
WA 10	NV-M 20/21	**53**
*	NV-M 11	*
WA 11	NV-M 20/21	**63**

flow-through connection		
hanger	type	dimension **Z** [mm]
WA 10	NV-M 10/11*	**35**
WA 10	NV-M 20/21	**79**
WA 11	NV-M 10/11*	**45**
WA 11	NV-M 20/21	**89**

* **Tip:** When installing NV-M 10 and NV-M 11 radiators with angle connection (**ZE, EE**), use appropriate wall plugs or wall brackets to achieve the required distance from the wall.

type	NV-M 10	NV-M 11	NV-M 20	NV-M 21
height [mm]	1600; 1800; 2000	1600; 1800; 2000	1600; 1800; 2000	1600; 1800; 2000
width [mm]	**214 – 862**			
step	**72 mm**			

NARBONNE V M

weight and water volume

weight : kg/m

type	height [mm]		
	1600	1800	2000
NV-M 10	44.45	49.60	54.75
NV-M 11	63.39	68.53	73.69
NV-M 20	85.44	95.46	105.48
NV-M 21	104.37	114.39	124.42

water volume : l/m

type	height [mm]		
	1600	1800	2000
NV-M 10	11.37	12.47	13.85
NV-M 11	11.37	12.47	13.85
NV-M 20	22.74	24.34	27.71
NV-M 21	22.74	24.34	27.71

NARBONNE V M

Proper initial preset can be easily and precisely obtained with no necessity of using any dedicated tools (see the diagrams below).

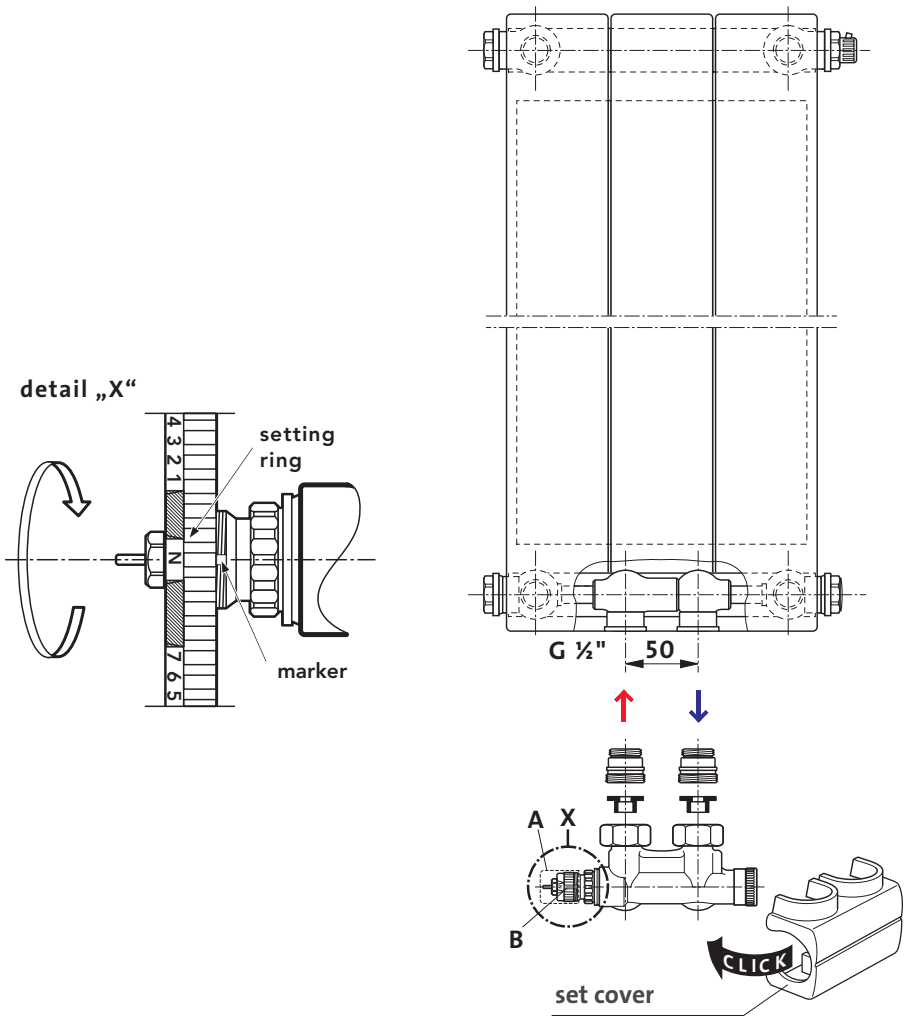

Vertical Narbonne V M radiators are delivered with a thermostatic valve (straight or angular) with a valve masking cover in the same colour as the radiator. When placing an order, define the valve type and the type of system (one- or two-pipe) in which the radiator will be installed.

After the valve's masking cover has been removed (pos. A), a built-in valve insert (not included in the radiator's set) will be mounted (pos. B):
Danfoss (RA 2994, RAW 5115), **Oventrop Uni XD**, **Heimeier VK**, **Herz D**, **Honeywell thera-DA**.

Tips for setting:

- remove the plastic valve's masking cover;
- rotate the setting ring to achieve the required setting (1, 2,...7, N) opposite the marker;
- the preset can be adjusted in the range between 1 and 7, with the resolution of 0.5 of the scale. The factory default preset values correspond to the highest kv value, which in turn corresponds to the "N" setting.

Note: adjustment of preset values between the scale's elements, in the crossed-out area, is not allowed!

NARBONNE V M

RADIATOR DESCRIPTION - AN EXAMPLE : **NARBONNE V M 10 1600 430**

name
type
height
width

depth [mm]		68 mm 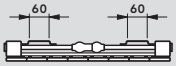			68 mm		
width [mm]	height [mm]	1600	1800	2000	1600	1800	2000
	t_z / t_p / t_i	NV-M 10	NV-M 10	NV-M 10	NV-M 11	NV-M 11	NV-M 11
		[W]	[W]	[W]	[W]	[W]	[W]
214 (3)	**75/65/20 °C** 55/45/20 °C	**372** 182	**424** 207	**478** 235	**424** 211	**473** 235	**524** 262
286 (4)	**75/65/20 °C** 55/45/20 °C	**497** 243	**566** 277	**638** 314	**566** 281	**632** 314	**701** 350
358 (5)	**75/65/20 °C** 55/45/20 °C	**622** 304	**708** 346	**799** 393	**708** 352	**791** 393	**877** 438
430 (6)	**75/65/20 °C** 55/45/20 °C	**747** 365	**851** 416	**960** 472	**851** 423	**950** 472	**1054** 526
502 (7)	**75/65/20 °C** 55/45/20 °C	**872** 427	**993** 486	**1120** 551	**993** 493	**1109** 551	**1230** 614
574 (8)	**75/65/20 °C** 55/45/20 °C	**998** 488	**1136** 556	**1281** 630	**1136** 564	**1268** 630	**1406** 702
646 (9)	**75/65/20 °C** 55/45/20 °C	**1123** 549	**1278** 625	**1442** 709	**1278** 635	**1427** 709	**1583** 790
718 (10)	**75/65/20 °C** 55/45/20 °C	**1248** 610	**1421** 695	**1603** 788	**1421** 706	**1586** 788	**1759** 878
790 (11)	**75/65/20 °C** 55/45/20 °C	**1373** 672	**1563** 764	**1763** 867	**1563** 776	**1745** 867	**1936** 966
862 (12)	**75/65/20 °C** 55/45/20 °C	**1498** 733	**1706** 834	**1924** 946	**1706** 847	**1904** 946	**2112** 1054

Thermal output of the radiators [W] in accordance with EN 442 for parameters 75/65/20 °C and 55/45/20 °C.

exponent n	**1.40**	**1.40**	**1.39**	**1.37**	**1.37**	**1.36**

NARBONNE V M

RADIATOR DESCRIPTION - AN EXAMPLE : **NARBONNE V M 20 1600 430**

name
type
height
width

depth [mm]		93 mm 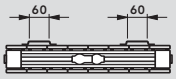			93 mm 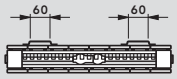		
width [mm]	height [mm]	1600	1800	2000	1600	1800	2000
	t_z / t_p / t_i	NV-M 20	NV-M 20	NV-M 20	NV-M 21	NV-M 21	NV-M 21
		[W]	[W]	[W]	[W]	[W]	[W]
214 (3)	**75/65/20 °C** 55/45/20 °C	**627** 305	**706** 345	**786** 386	**681** 333	**768** 376	**859** 424
286 (4)	**75/65/20 °C** 55/45/20 °C	**839** 408	**944** 462	**1050** 516	**911** 446	**1026** 502	**1147** 567
358 (5)	**75/65/20 °C** 55/45/20 °C	**1050** 511	**1182** 578	**1315** 646	**1140** 558	**1285** 629	**1436** 710
430 (6)	**75/65/20 °C** 55/45/20 °C	**1261** 614	**1419** 694	**1579** 776	**1369** 670	**1543** 755	**1725** 852
502 (7)	**75/65/20 °C** 55/45/20 °C	**1472** 716	**1657** 810	**1843** 906	**1598** 782	**1801** 881	**2014** 995
574 (8)	**75/65/20 °C** 55/45/20 °C	**1683** 819	**1895** 927	**2108** 1036	**1828** 894	**2060** 1008	**2303** 1138
646 (9)	**75/65/20 °C** 55/45/20 °C	**1894** 922	**2132** 1043	**2372** 1166	**2057** 1006	**2318** 1134	**2592** 1281
718 (10)	**75/65/20 °C** 55/45/20 °C	**2105** 1024	**2370** 1159	**2636** 1296	**2286** 1118	**2576** 1260	**2881** 1424
790 (11)	**75/65/20 °C** 55/45/20 °C	**2316** 1127	**2608** 1276	**2901** 1426	**2515** 1230	**2835** 1387	**3169** 1566
862 (12)	**75/65/20 °C** 55/45/20 °C	**2527** 1230	**2845** 1392	**3165** 1556	**2745** 1343	**3093** 1513	**3458** 1709
	exponent n	**1.41**	**1.40**	**1.39**	**1.40**	**1.40**	**1.38**

Thermal output of the radiators [W] in accordance with EN 442 for parameters 75/65/20 °C and 55/45/20 °C.

Connections

Types NA and NA-S - two-pipe system

one-side connection
on the right side

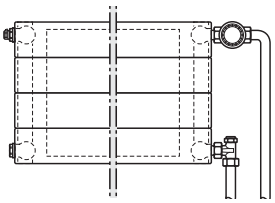

one-side connection
on the left side

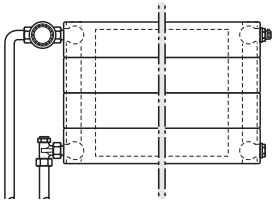

bottom connection on the right side
Note: reduced efficiency

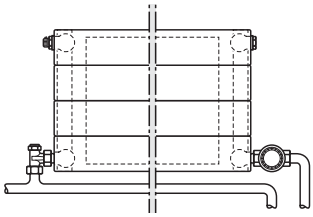

bottom connection on the left side
Note: reduced efficiency

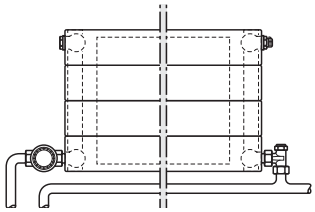

cross connection
on the right side

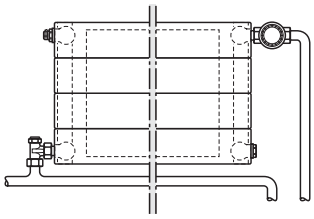

cross connection
on the left side

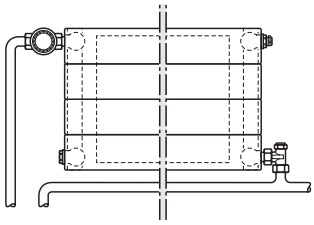

Types NA and NA-S - one-pipe system

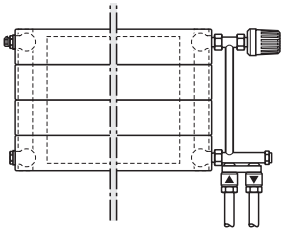

Narbonne decorative radiators can be easily connected to one-pipe systems using special sets with four-way valves and a bypass.

Types NV - two-pipe system

Note: radiators in the vertical version cannot be installed in one-pipe systems!

one-side connection
on the right side

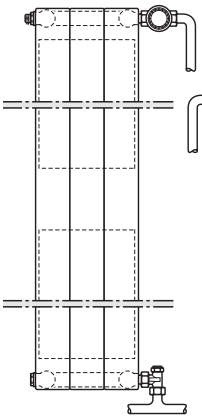

one-side connection
on the left side

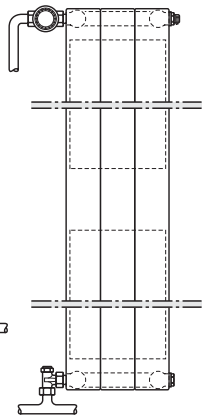

cross connection
on the right side

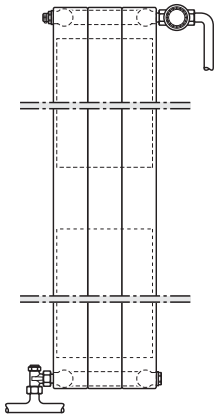

cross connection
on the left side

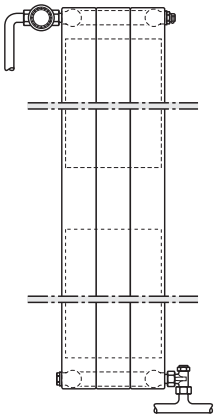

bottom connection
on the right side

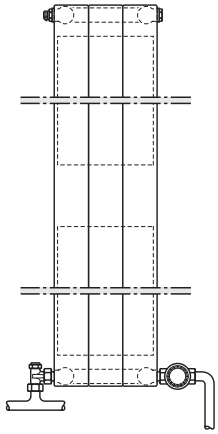

bottom connection
on the left side

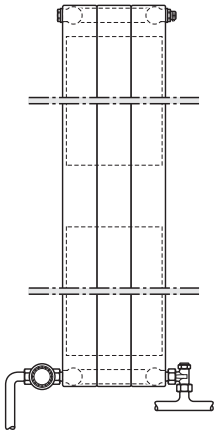

Note: When ordering Narbonne radiators, make sure to provide information on the location of the connection ports. After a purchase order is accepted, no changes are possible!

Brackets for Narbonne of the height up to 286 mm

WK 10-13 wall brackets: positioning for Narbonne radiators

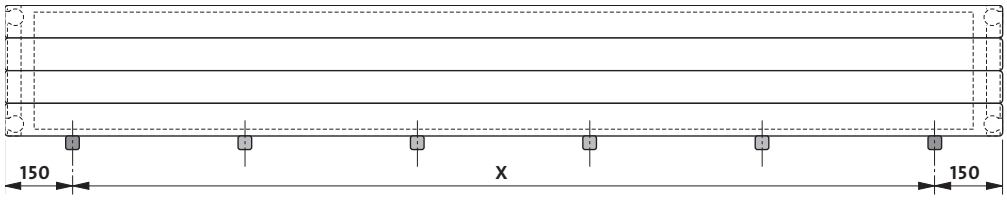

Note: When using more than two wall brackets, additional brackets should be evenly placed within the **X** segment

WK 10 wall brackets	WK 10-M wall brackets	WK 11-M wall brackets	WK 11-M wall brackets
NA 11	NA 22	NA 23	NA 34
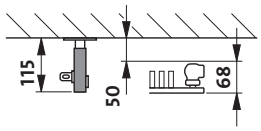	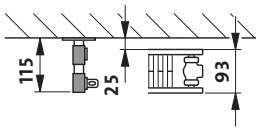	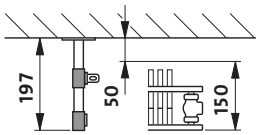	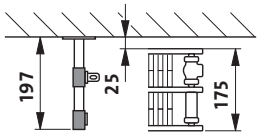
WK 12 wall brackets		**WK 13 wall brackets**	
NA 35	NA 46	NA 58	
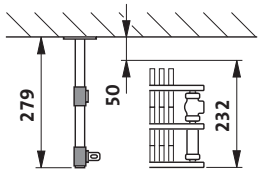	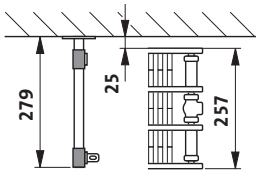	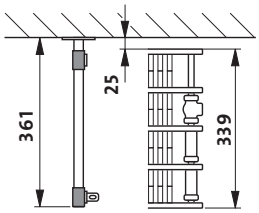	

Selection tables for brackets

Tables to assist in the selection of the number and type of brackets for a Narbonne decorative radiator

WK wall hangers for NA radiators up to and including 286 mm high

radiator's type		NA 11		NA 22		NA 23		NA 34	
brackets type		WK 10		WK 10-M		WK 11-M		WK 11-M	
length [mm]		500 up to 2000	2200 up to 4000	500 up to 2000	2200 up to 4000	500 up to 2000	2200 up to 4000	500 up to 2000	2200 up to 4000
height [mm]	70			2	3	2	3	2	3
	142			2	3	2	3	2	3
	214	2	3	2	3	2	3	2	3
	286	2	3	2	3	2	3	2	3

radiator's type		NA 35		NA 35		NA 35		NA 46		NA 46	
brackets type		WK 12		WK 12		WK 12		WK 12		WK 12	
length [mm]		500 up to 2000	2200 up to 4000	500 up to 1800	2200 up to 2600	2800 up to 3600	3800 up to 4000	500 up to 2000	2200 up to 3000	500 up to 1800	2000 up to 2800
height [mm]	70	2	3					2	3		
	142	2	3					2	3		
	214	2	3							2	3
	286			2	3	4	5				

radiator's type		NA 46		NA 46		NA 58		NA 58		NA 58	
brackets type		WK 12		WK 12		WK 13		WK 13		WK 13	
length [mm]		3000	500 up to 1400	1600 up to 2200	2400 up to 2800	500 up to 2000	2200	500 up to 1600	1800 up to 2200	500 up to 1100	1200 up to 1600
height [mm]	70					2	3				
	142							2	3		
	214	4								2	3
	286	5	2	3	4		6				

Stands for Narbonne of the height up to 286 mm

SK 10-19 stands: positioning for Narbonne radiators

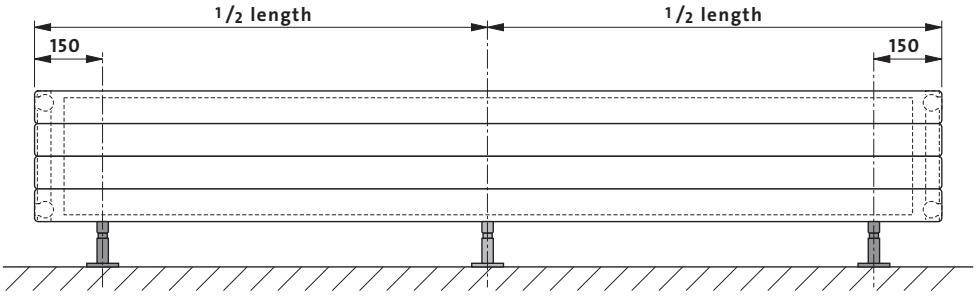

Note: For length values exceeding **2200 mm**, it is necessary to apply the additional **third** SK stand!

SK 10 / SK 11	SK 12 / SK 13		SK 14 / SK 15	
NA 11	NA 22	NA 23	NA-S 22	NA 34
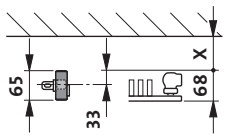	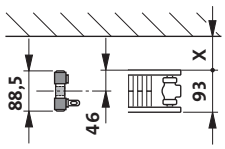	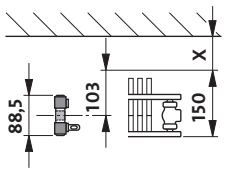	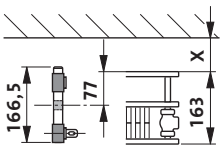	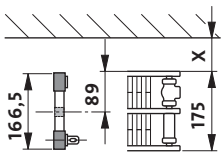

SK 14 / SK 15		SK 16 / SK 17	SK 18 / SK 19	
NA 35	NA-S 34	NA 46	NA-S 47	NA 58
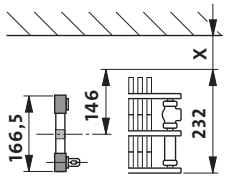	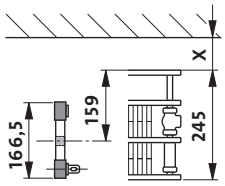	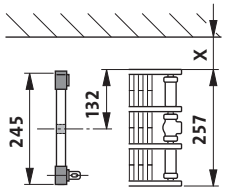	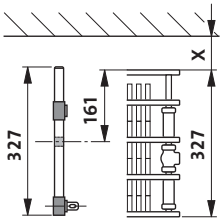	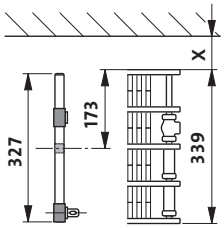

X dimension: the required distance from the wall, or glass surface, as measured from the rear wall of the radiator

FBT 20 window sill support: position for NA and NA-S radiators

Window sill supports for later installation on **NA and NA-S 22 - 58** type radiators

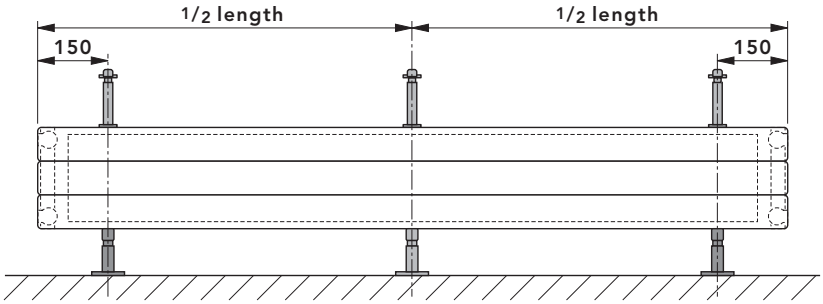

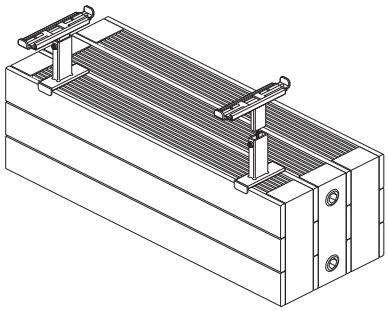

Note: For length values exceeding **2200 mm**, it is necessary to apply the additional **third** SK stand!

Selection tables for stands

SK stands type and quantity selection table for the Narbonne radiators

SK stands for NA and NA-S radiators of the height up to 286 mm (included)

radiator's type	NA 11		NA 22		NA-S 22	
stand / radiator's length [mm]	up to 2000	from 2200	up to 2000	from 2200	up to 2000	from 2200
SK 10 for the finished floor	2	3				
SK 11 for the unfinished floor	2	3				
SK 12 for the finished floor			2	3		
SK 13 for the unfinished floor			2	3		
SK 14 for the finished floor					2	3
SK 15 for the unfinished floor					2	3

radiator's type	NA 23		NA 34		NA-S 34		NA 35	
stand / radiator's length [mm]	up to 2000	from 2200	up to 2000	from 2200	up to 2000	from 2200	up to 2000	from 2200
SK 12 for the finished floor	2	3						
SK 13 for the unfinished floor	2	3						
SK 14 for the finished floor			2	3	2	3	2	3
SK 15 for the unfinished floor			2	3	2	3	2	3

radiator's type	NA 46		NA-S 47		NA 58	
stand / radiator's length [mm]	up to 2000	from 2200	up to 2000	from 2200	up to 2000	from 2200
SK 16 for the finished floor	2	3				
SK 17 for the unfinished floor	2	3				
SK 18 for the finished floor			2	3	2	3
SK 19 for the unfinished floor			2	3	2	3

Brackets for Narbonne VT of the height up to 286 mm

WK 10-12 wall brackets: positioning for Narbonne VT radiators (up to 286 mm)

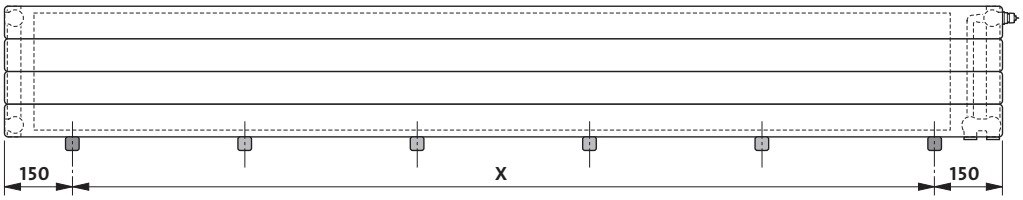

Note: When using more than **two** wall brackets, additional brackets should be evenly placed within the **X** segment.

WK 10 wall brackets	WK 10-M wall brackets	WK 11-M wall brackets	
NA 11	NA 22	NA 23	NA 34
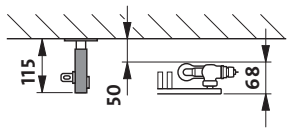	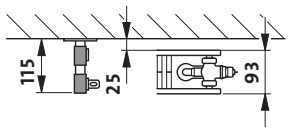	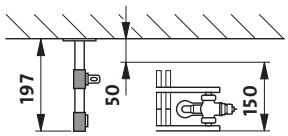	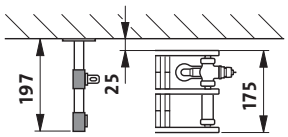
WK 12 wall brackets			
NA 35	NA 46		
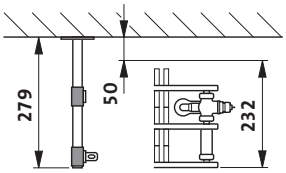	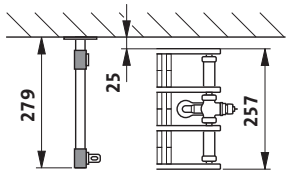		

Brackets for Narbonne M of the height up to 286 mm

Wall brackets: positioning for Narbonne M radiators (up to 286 mm)

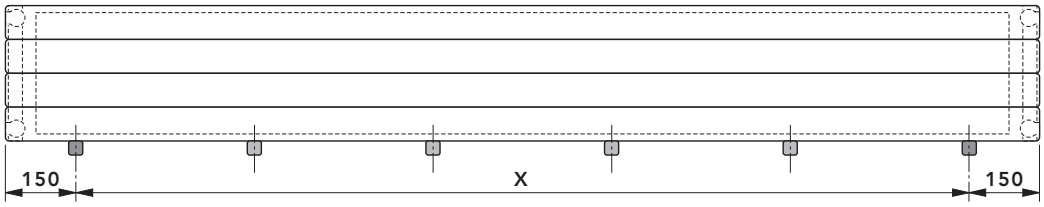

Note: When using more than **two** wall brackets, additional brackets should be evenly placed within the **X** segment.

WK 10-M wall brackets	WK 11-M wall brackets	WK 12 wall brackets
NA-M 22 for height 214 - 286 mm	NA-M 34	NA-M 46
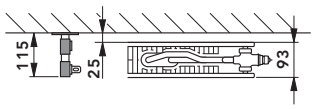	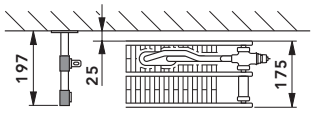	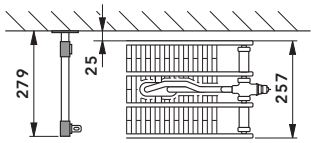

Selection tables for brackets

Tables to assist in the selection of the number and type of brackets for Narbonne VT and Narbonne M decorative radiators with central connection

WK brackets for NA radiators of the height up to 286 mm (included)

radiator's type		NA 11		NA 22		NA 23	
brackets type		WK 10		WK 10-M		WK 11-M	
length [mm]		500 up to 2000	2200 up to 4000	500 up to 2000	2200 up to 4000	500 up to 2000	2200 up to 4000
height [mm]	142			2	3	2	3
	214	2	3	2	3	2	3
	286	2	3	2	3	2	3

radiator's type		NA 34		NA 35		NA 35		NA 35	
brackets type		WK 11-M		WK 12		WK 12		WK 12	
length [mm]		500 up to 2000	2200 up to 4000	500 up to 2000	2200 up to 4000	500 up to 1800	2200 up to 2600	2800 up to 3600	3800 up to 4000
height [mm]	142	2	3	2	3				
	214	2	3	2	3				
	286	2	3			2	3	4	5

radiator's type		NA 46		NA 46		NA 46		NA 46	
brackets type		WK 12		WK 12		WK 12		WK 12	
length [mm]		500 up to 2000	2200 up to 3000	500 up to 1800	2000 up to 2800	3000	500 up to 1400	1600 up to 2200	2400 up to 2800
height [mm]	142	2	3						
	214			2	3	4			
	286					5	2	3	4

WK brackets for NA-M radiators of the height up to 286 mm (included)

radiator's type		NA-M 22		NA-M 34		NA-M 46	
brackets type		WK 10-M		WK 11-M		WK 12	
length [mm]		500 up to 2000	2200 up to 4000	500 up to 2000	2200 up to 4000	500 up to 2000	2200 up to 4000
height [mm]	142			2	3	2	3
	214	2	3	2	3	2	3
	286	2	3	2	3	2	3

Stands for Narbonne VT of the height up to 286 mm

SK 10 - 19 stands: positioning for NA/NA-S radiators (up to 286 mm)

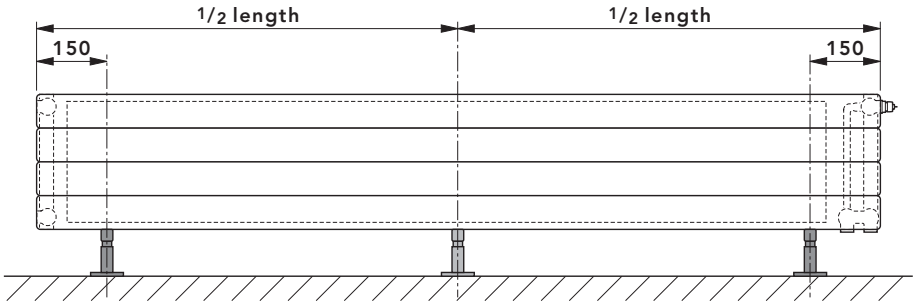

SK 10 / SK 11
NA 11

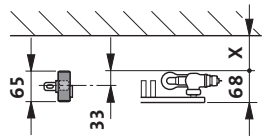

Note: For length values exceeding **2200 mm**, it is necessary to apply the additional **third** SK stand!

SK 12 / SK 13		SK 14 / SK 15	
NA 22	NA 23	NA-S 22	NA 34
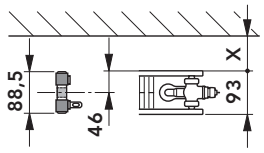	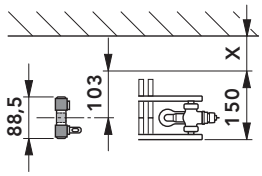	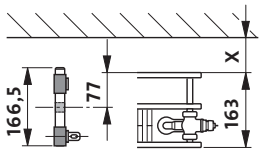	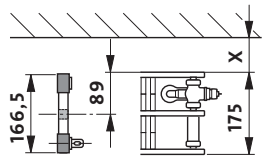
SK 14 / SK 15		SK 16 / SK 17	SK 18 / SK 19
NA 35	NA-S 34	NA 46	NA-S 47
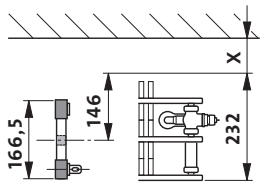	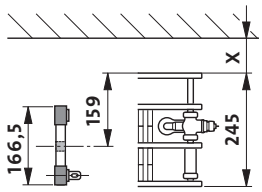	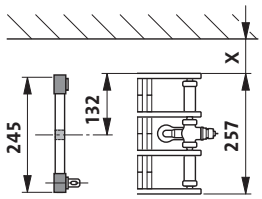	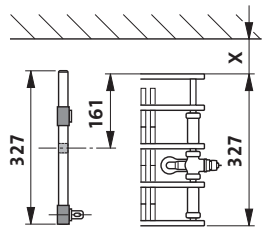

FBT 20 window sill support: position for NA and NA-S radiators (up to the height of 286 mm)

Window sill supports for later installation on **NA and NA-S 22 - 47** type radiators (**up to the height of 286 mm**)

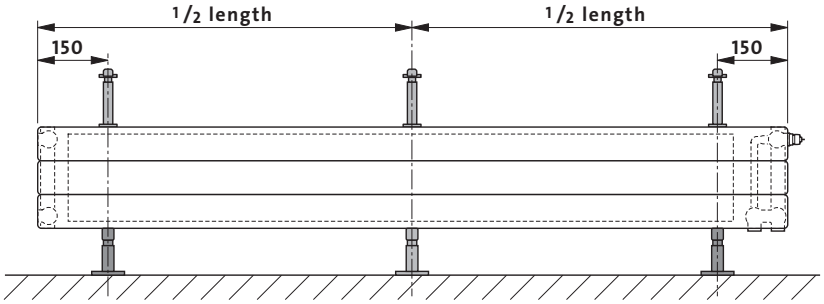

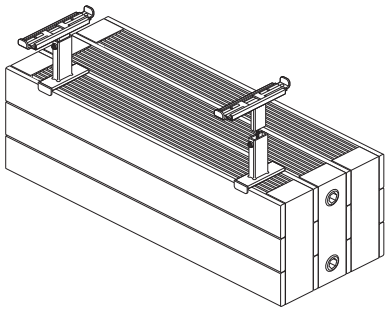

Note: For length values exceeding **2200 mm**, it is necessary to apply the additional **third** SK stand!

Stands for Narbonne M of the height up to 286 mm

SK 12 - 17 stands: positioning for NA-M radiators (up to 286 mm)

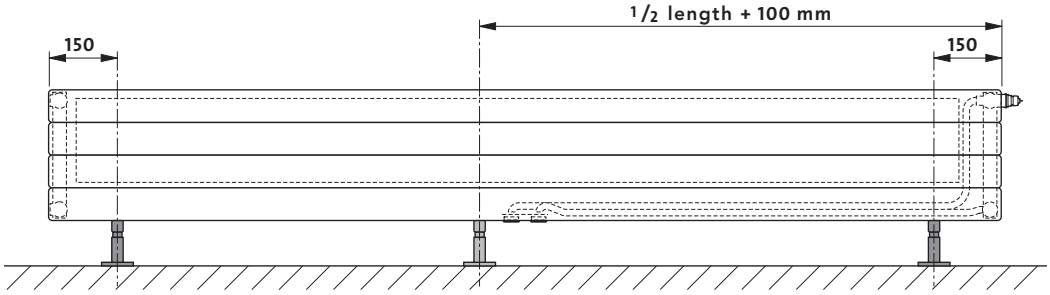

Note: For length values exceeding **2200 mm**, it is necessary to apply the additional **third** SK stand!

SK 12 / SK 13 stand	SK 14 / SK 15 stand	SK 16 / SK 17 stand
NA-M 22	NA-M 34	NA-M 46
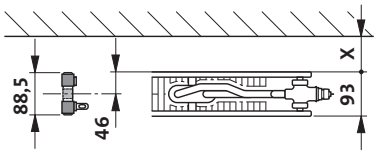	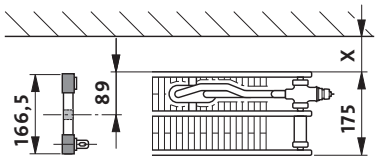	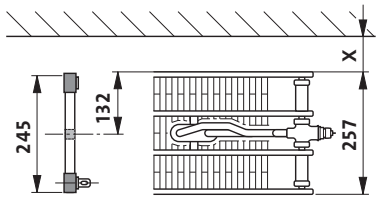

FBT 20 window sill support: positioning for NA-M radiators (up to 286 mm)

Window sill supports for installation on **Narbonne M** radiators: central connection for **NA-M 22 - 46 types (up to the height of 286 mm)**

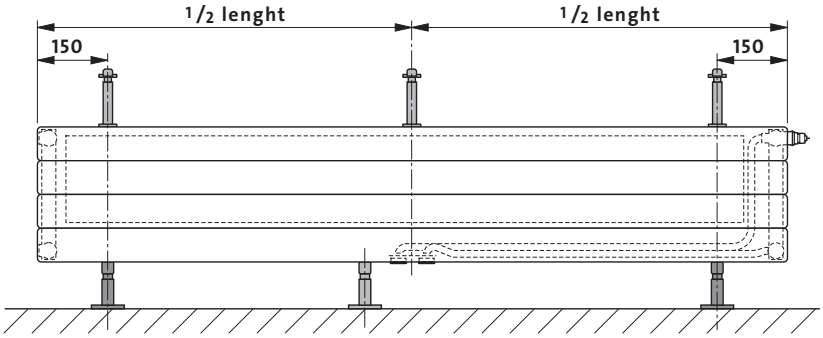

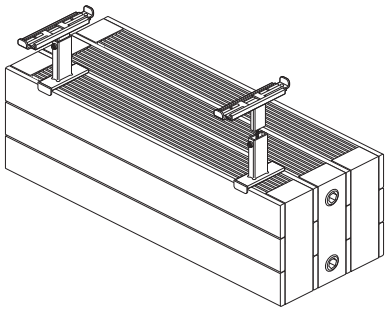

Note: For length values exceeding **2200 mm**, it is necessary to apply the additional **third** SK stand!

Selection tables for stands

SK stands type and quantity selection table for the Narbonne radiators VT and Narbonne M with middle connection

SK stands for NA and NA-S radiators of the height up to 286 mm

radiator's type	NA 11		NA 22		NA-S 22		NA 23	
stand / radiator's length [mm]	up to 2000	from 2200	up to 2000	from 2200	up to 2000	from 2200	up to 2000	from 2200
SK 10 for the finished floor	2	3						
SK 11 for the unfinished floor	2	3						
SK 12 for the finished floor			2	3			2	3
SK 13 for the unfinished floor			2	3			2	3
SK 14 for the finished floor					2	3		
SK 15 for the unfinished floor					2	3		

radiator's type	NA 34		NA-S 34		NA 35		NA 46		NA-S 47	
stand / radiator's length [mm]	up to 2000	from 2200	up to 2000	from 2200	up to 2000	from 2200	up to 2000	from 2200	up to 2000	from 2200
SK 14 for the finished floor	2	3	2	3	2	3				
SK 15 for the unfinished floor	2	3	2	3	2	3				
SK 16 for the finished floor							2	3		
SK 17 for the unfinished floor							2	3		
SK 18 for the finished floor									2	3
SK 19 for the unfinished floor									2	3

SK stands for NA-M radiators of the height up to 286 mm

radiator's type	NA-M 22		NA-M 34		NA-M 46	
stand / radiator's length [mm]	up to 2000	from 2200	up to 2000	from 2200	up to 2000	from 2200
SK 12 for the finished floor	2	3				
SK 13 for the unfinished floor	2	3				
SK 14 for the finished floor			2	3		
SK 15 for the unfinished floor			2	3		
SK 16 for the finished floor					2	3
SK 17 for the unfinished floor					2	3

Position of hangers for Narbonne radiators with the height of 358-790 mm

type	NA 10/11 - bracket WA 11 - 40, NA 22 - bracket WA 11 - 30
height 358 mm up to 502 mm	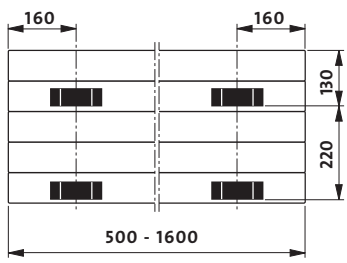 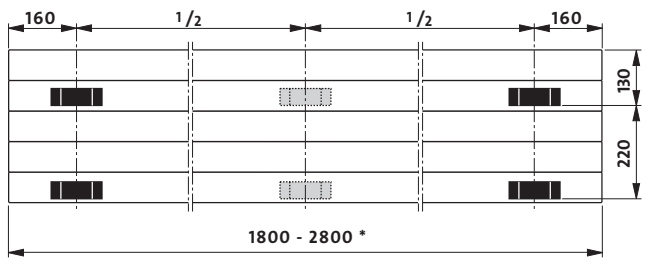
type	NA 10/11 - bracket WA 11 - 40, NA 22 - bracket WA 11 - 30
height 574 mm up to 790 mm	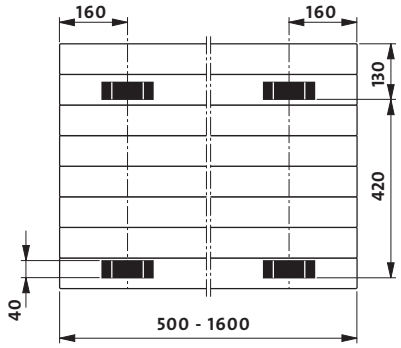 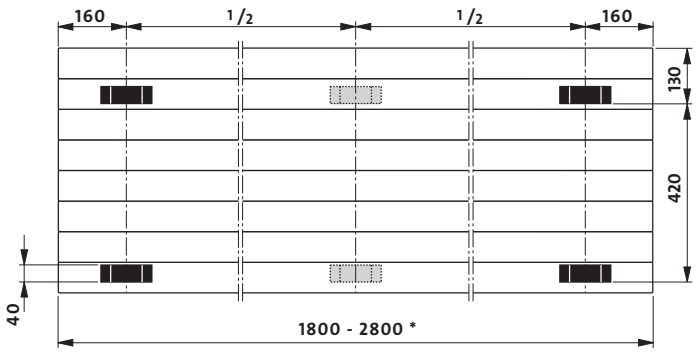
	NA 10 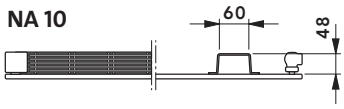 NA 11 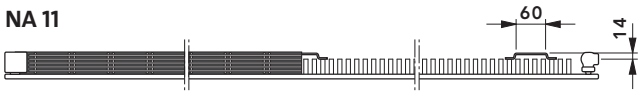 NA 22 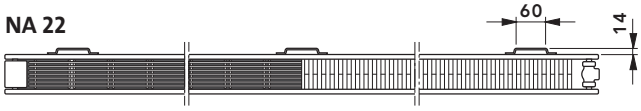

* 3000 mm to 4000 mm long radiators are equipped with additional installation hangers nos 4 and 5, placed symmetrically relative to the vertical axis of the radiator.

Horizontal NARBONNE radiators (358 to 790 mm high) **with hangers** are installed using brackets **WA 11, NA 10/11** radiators – using brackets **WA 11 – 40**, and **NA 22** radiators – using brackets **WA 11 - 30**.
Brackets WA 11 for radiators with hangers enable a quick, professional and stable installation of NARBONNE radiators without the necessity to remove the protective packaging.

Hanger position – 4 and 5

L [mm]	R ** [mm]
3000	670
3200	720
3400	770
3600	820
3800	870
4000	920

** R - The distance from the vertical axis of the radiator to the axis of hangers 4 and 5

Position of hangers for Narbonne VT radiators with the height of 358-790 mm

type	NA 11 - bracket WA 11 - 40, NA 22 - bracket WA 11 - 30	
height 358 mm up to 502 mm	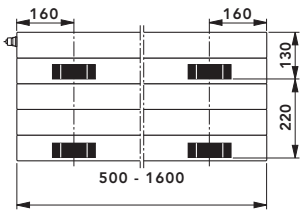	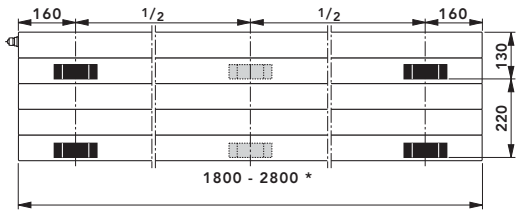
height 574 mm up to 790 mm	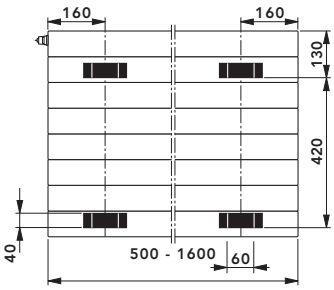	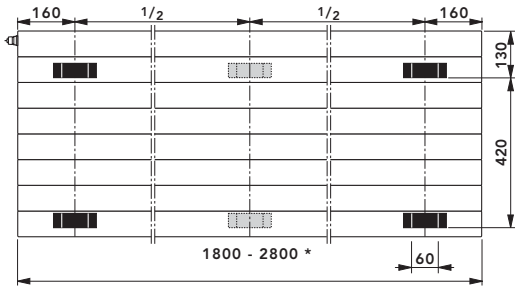
	NA 11 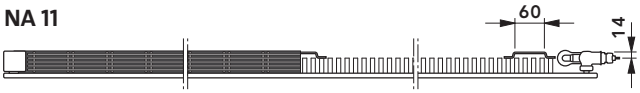 NA 22 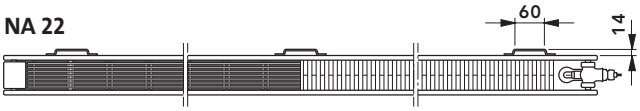	

* 3000 mm to 4000 mm long radiators are equipped with additional installation hangers nos 4 and 5, placed symmetrically relative to the vertical axis of the radiator.

Horizontal NARBONNE VT radiators (358 to 790 mm high) **with hangers** are installed using brackets **WA 11, NA 11** radiators – using brackets **WA 11 – 40**, and **NA 22** radiators – using brackets **WA 11 - 30**.
Brackets WA 11 for radiators with hangers enable a quick, professional and stable installation of NARBONNE VT radiators without the necessity to remove the protective packaging.

Hanger position – 4 and 5

L [mm]	R ** [mm]
3000	670
3200	720
3400	770
3600	820
3800	870
4000	920

** R - The distance from the vertical axis of the radiator to the axis of hangers 4 and 5

Installation of brackets for the height of 358 - 790 mm

WA11 brackets are intended for **NA 10, NA 11, and NA 22** radiators with hangers (height 358 mm to 790 mm). They enable professional, quick, and stable installation of **Narbonne** and **Narbonne VT** decorative radiators without the need to remove the protective packaging.

Brackets for 358 mm to 790 mm high radiators

Installation dimensions for the WA11 brackets

Bracket for **358 mm to 790 mm** high radiators	radiator height [mm]	dimension **X** [mm]	dimension **Y** [mm]	dimension **Z** [mm]
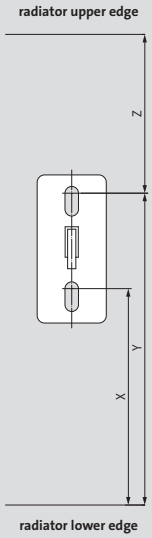	358	**203**	**261**	**97**
	430	**275**	**333**	**97**
	502	**347**	**405**	**97**
	574	**419**	**477**	**97**
	646	**491**	**549**	**97**
	790	**635**	**693**	**97**

Distance from the wall

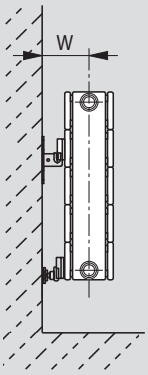	bracket type	radiator's type	height [mm]	dimension **W** [mm]
	WA 11 - 40	NA 10/11	358 - 790	**55**
	WA 11 - 30	NA 22	358 - 790	**89**

Bracket selection table on page 114

Position of hangers for the height of 358 mm to 790 mm

type	NA-M 11 - bracket WA 11 - 40, NA-M 22 - bracket WA 11 - 30
height 358 mm	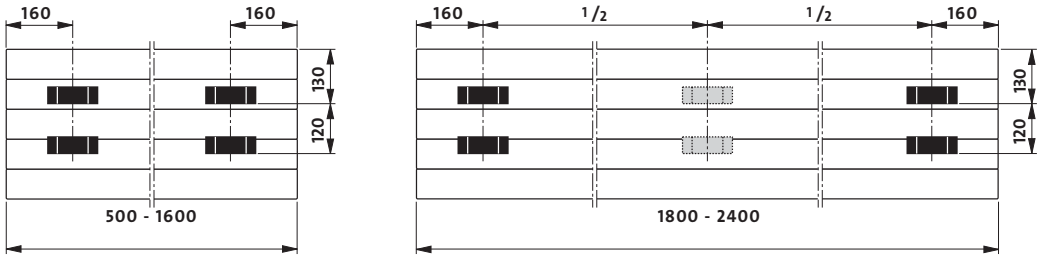
type	**NA-M 11 - bracket WA 11 - 40, NA-M 22 - bracket WA 11 - 30**
height 430-574 mm NA-M 11, 358-502 mm NA-M 22	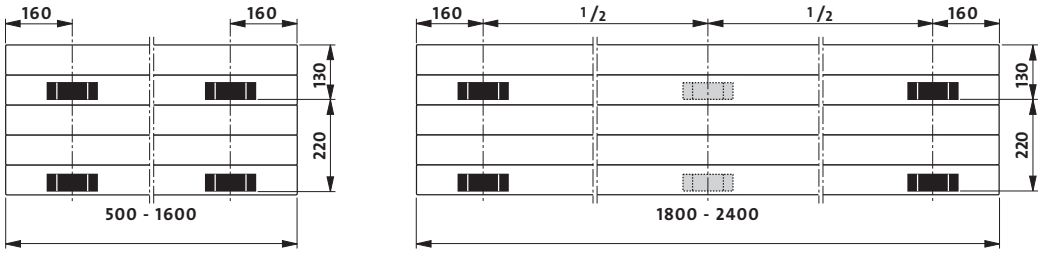
type	**NA-M 11 - bracket WA 11 - 40, NA-M 22 - bracket WA 11 - 30**
height 646-790 mm NA-M 11, 574-790 mm NA-M 22	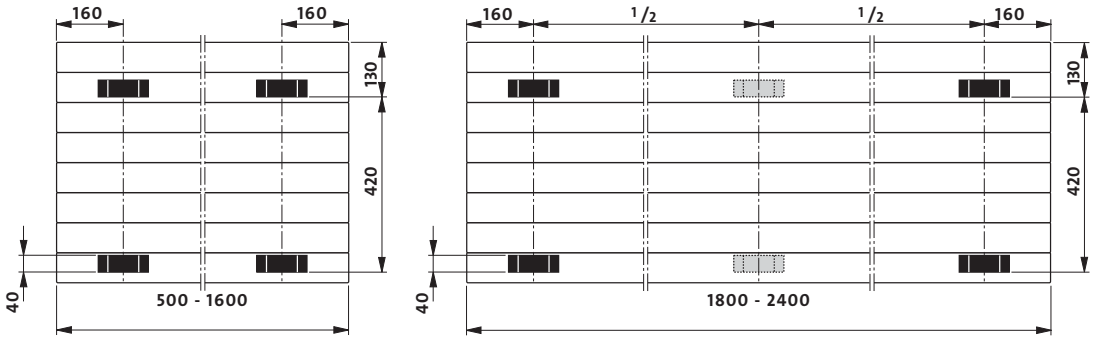
	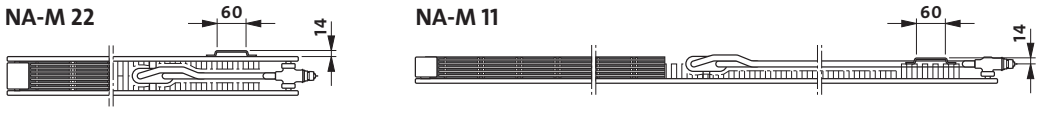

Note! Horizontal versions of NA-M 11 and NA-M 22 radiators (height from 358 mm to 790 mm) are delivered **with hangers** as a standard.

Installation of brackets for Narbonne M 358 to 790 mm high

WA11 brackets are intended for the horizontal version of **NA-M 11 and NA-M 22** radiators (height from 358mm to 790mm) **with hangers**. They enable professional, quick, and stable installation of **Narbonne M** decorative radiators without the need to remove the protective packaging.

Brackets for 358 mm to 790 mm high radiators

Distances between openings in WA11 brackets

Bracket for **358 mm to 790 mm** high radiators	type	radiator height [mm]	dimension **X** [mm]	dimension **Y** [mm]	dimension **Z** [mm]
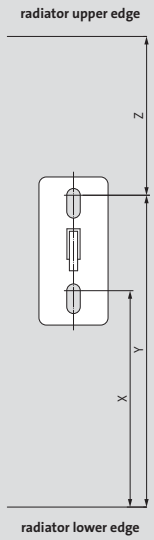	NA-M 11, 22	358	**203**	**261**	**97**
	NA-M 11, 22	430	**275**	**333**	**97**
	NA-M 11, 22	502	**347**	**405**	**97**
	NA-M 11, 22	574	**419**	**477**	**97**
	NA-M 11, 22	646	**491**	**549**	**97**
	NA-M 11, 22	790	**635**	**693**	**97**

Distance from the wall

	bracket type	radiator's type	height [mm]	dimension **W** [mm]
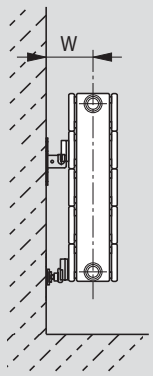	WA 11 - 40	NA-M 11	358 - 790	**55**
	WA 11 - 30	NA-M 22	358 - 790	**89**

Bracket selection table on page 114

Bracket selection table

A table intended to assist in the selection of the number and type of brackets for Narbonne, Narbonne VT, and Narbonne M decorative radiators, 358 mm to 790 mm high

Table for the selection of the number of WA 11 - 40 brackets for 358 mm to 790 mm high NA and NA-M radiators with hangers

radiator's type		NA 10			NA and NA-M 11		
length [mm]		up to 1600	from 1800 up to 2800	from 3000 up to 4000	up to 1600	from 1800 up to 2800	from 3000 up to 4000
height [mm]	double set for 358	1	2	3	1	2	3
	double set for 430	1	2	3	1	2	3
	double set for 502	1	2	3	1	2	3
	double set for 574	1	2	3	1	2	3
	double set for 646	1	2	3	1	2	3
	double set for 790	1	2	3	1	2	3

Table for the selection of the number of WA 11 - 30 brackets for 358 mm to 790 mm high NA and NA-M radiators with hangers

radiator's type		NA and NA-M 22		
length [mm]		up to 1600	from 1800 up to 2800	from 3000 up to 4000
height [mm]	double set for 358	1	2	3
	double set for 430	1	2	3
	double set for 502	1	2	3
	double set for 574	1	2	3
	double set for 646	1	2	3
	double set for 790	1	2	3

Auxiliary table for the selection of the number and type of brackets for the decorative vertical radiators Narbonne V, Narbonne V VT and Narbonne V M

radiator's type	NV, NV VT, NV-M 10		NV, NV VT, NV-M 11		NV, NV VT, NV-M 20		NV, NV VT, NV-M 21	
width [mm]	up to 214	from 286	up to 214	from 286	up to 214	from 286	up to 214	from 286
WA 10 - 40	1		1					
WA 10 - 20					1		1	
WA 11 - 40		1		1				
WA 11 - 30						1		1

Position of hangers for Narbonne V radiators

back view

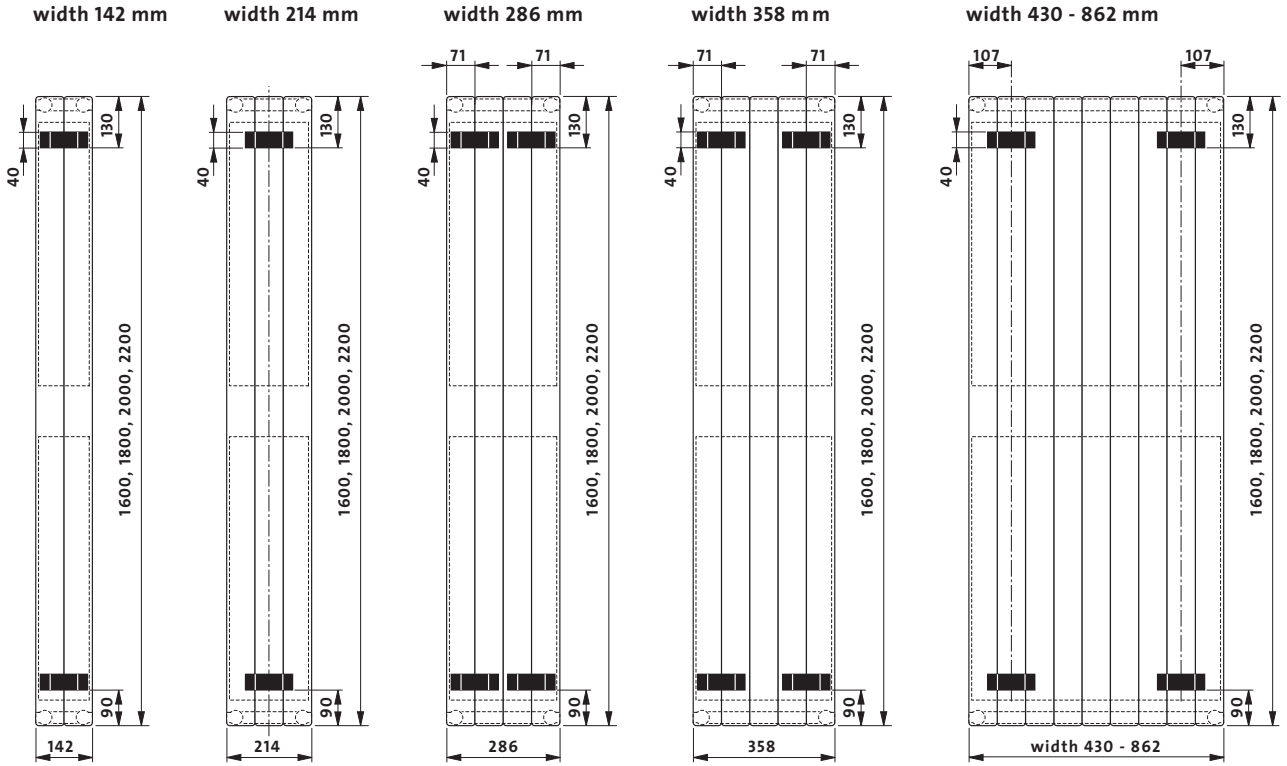

top view

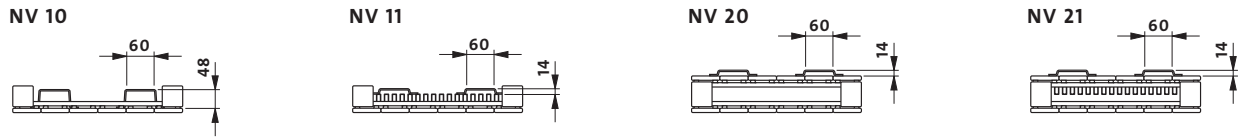

Distance from the wall: wall bracket WA10 and WA11 for Narbonne V radiators					
Distance from the wall					
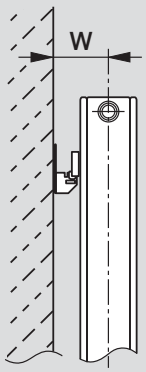	brackets type	radiator's type	radiator's width [mm]	dimension **W** [mm]	number of brackets
	WA 10 - 40	NV 10/11	142, 214	**55**	1 set
	WA 10 - 30	NV 20/21	142, 214	**79**	1 set
	WA 11 - 40	NV 10/11	286 up to 862	**55**	1 set
	WA 11 - 30	NV 20/21	286 up to 862	**89**	1 set

Position of hangers for Narbonne V VT radiators

back view

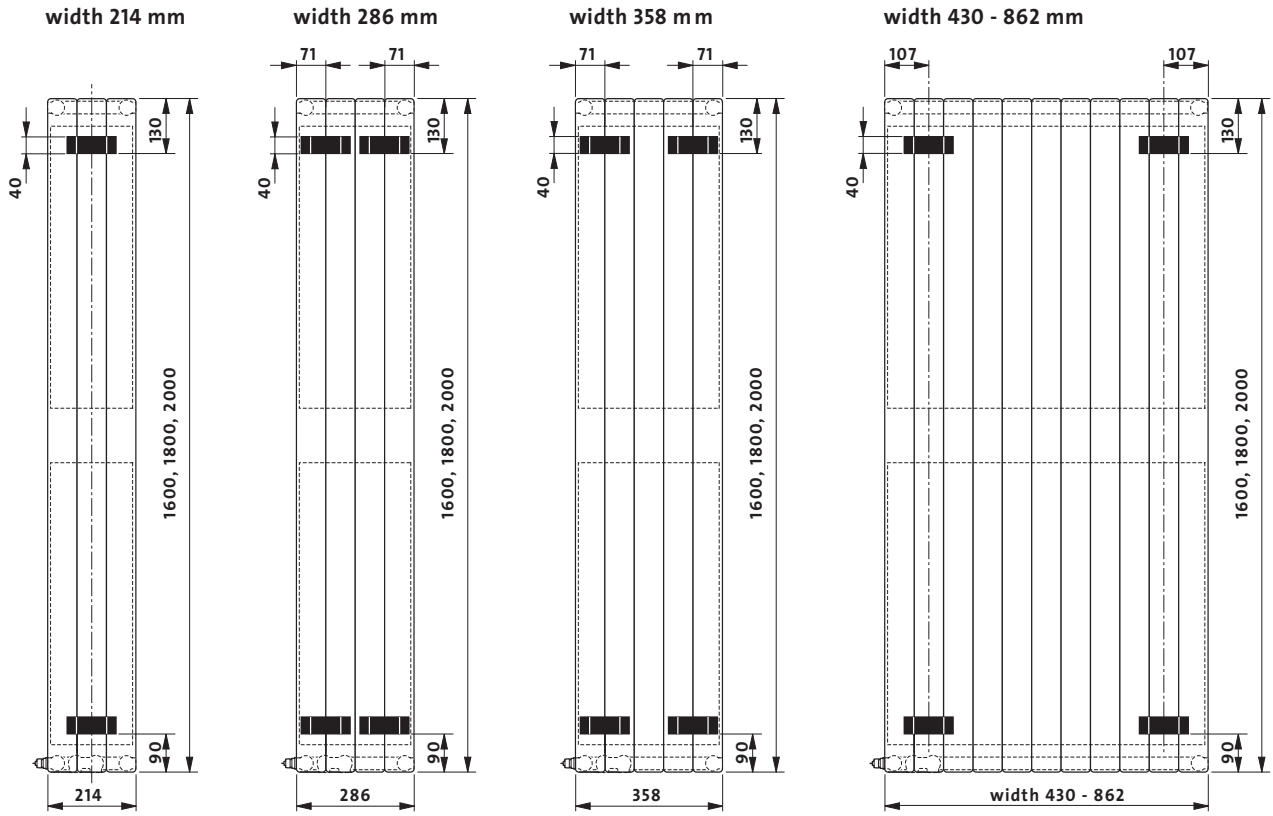

top view

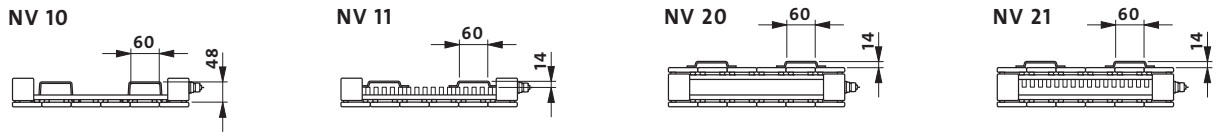

Distance from the wall: wall bracket WA10 and WA11 for NV radiators					
Distance from the wall					
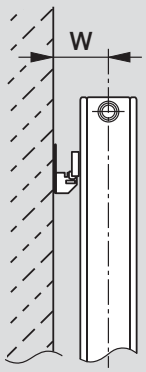	brackets type	radiator's type	radiator's width [mm]	dimension **W** [mm]	number of brackets
	WA 10 - 40	NV 10/11	142, 214	**55**	1 set
	WA 10 - 20	NV 20/21	142, 214	**79**	1 set
	WA 11 - 40	NV 10/11	286 up to 862	**55**	1 set
	WA 11 - 30	NV 20/21	286 up to 862	**89**	1 set

Position of hangers for Narbonne V M radiators

back view

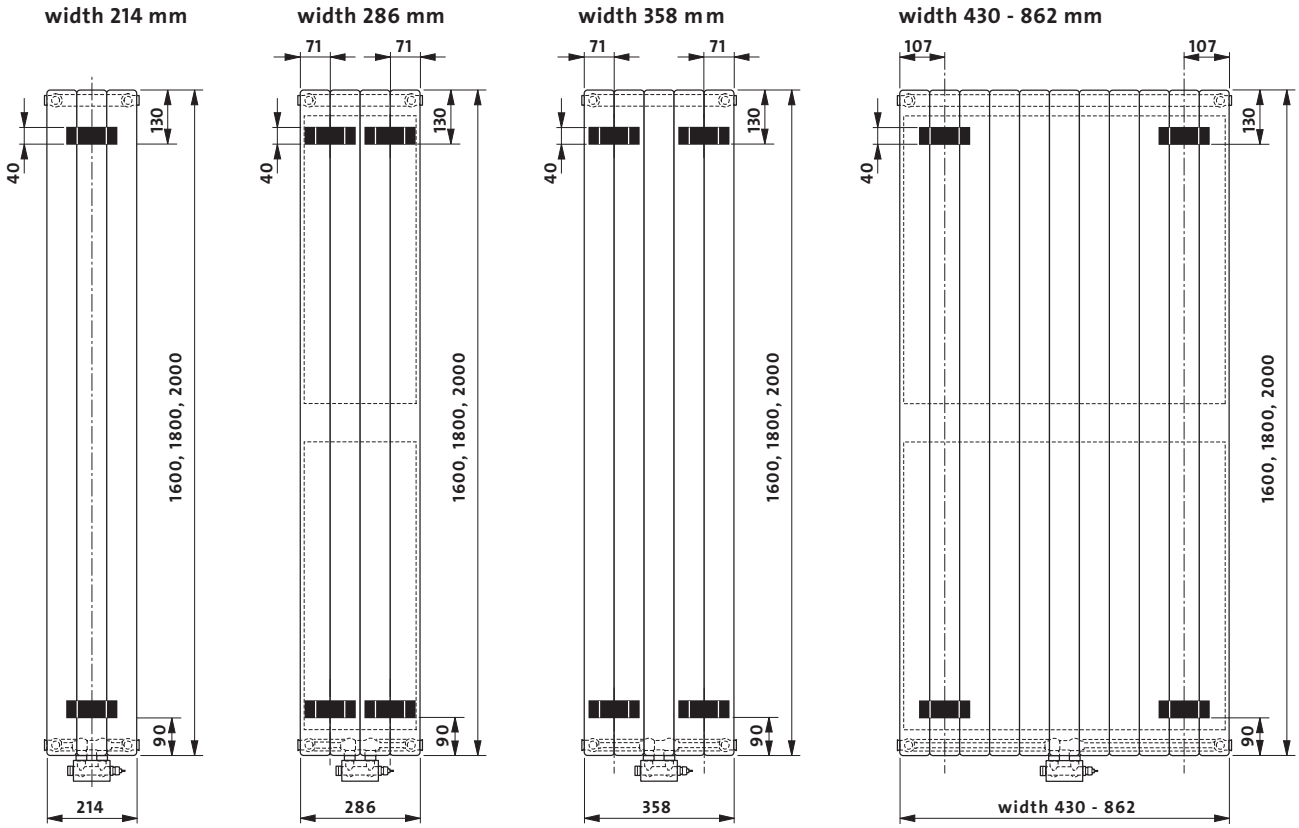

top view

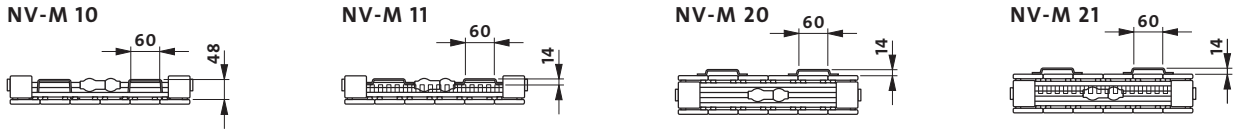

Distance from the wall: wall bracket WA10 and WA11 for NV-M radiators					
Distance from the wall					
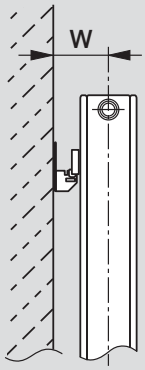	brackets type	radiator's type	radiator's width [mm]	dimension **W** [mm]	number of brackets
	WA 10 - 40	NV-M 10/11	142, 214	**55**	1 set
	WA 10 - 20	NV-M 20/21	142, 214	**79**	1 set
	WA 11 - 40	NV-M 10/11	286 up to 862	**55**	1 set
	WA 11 - 30	NV-M 20/21	286 up to 862	**89**	1 set

NARBONNE VT, NARBONNE M NARBONNE

Installation tips

Horizontal version of Narbonne VT, Narbonne M, and Narbonne radiators

Location of radiators

behind a curtain

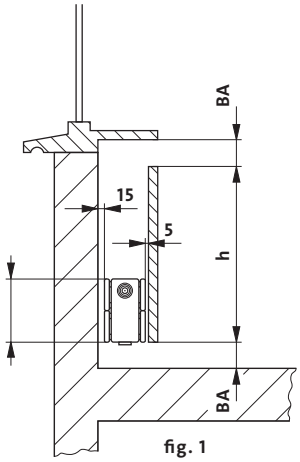

fig. 1

behind a desk

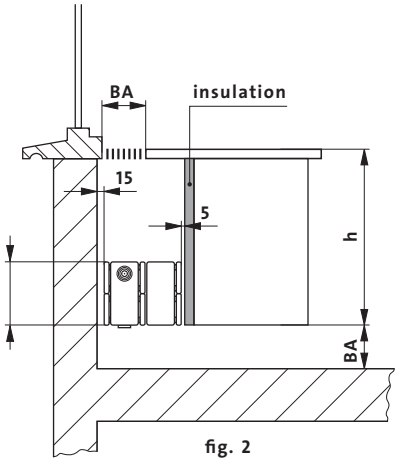

fig. 2

Note:
It is recommended to use covers and desks that are easily to disassemble so as to enable keeping the channels clean.

h [mm]	Increase of the heating output of Narbonne in [%]			
	hight 70 mm	hight 142 mm	hight 214 mm	hight 286 mm
150	14	-	-	-
200	20	8	-	-
250	26	12	2	-
300	30	15	6	-
350	33	19	9	3
400	36	22	12	6
450	39	25	15	9
500	41	28	17	11
600	46	32	21	14
700	50	35	24	18
800	-	38	27	21

The percentage increase of the heating output of the radiators as a result of the stack effect in the position shown in fig. 1 and fig. 2

Location of radiators in floor channels

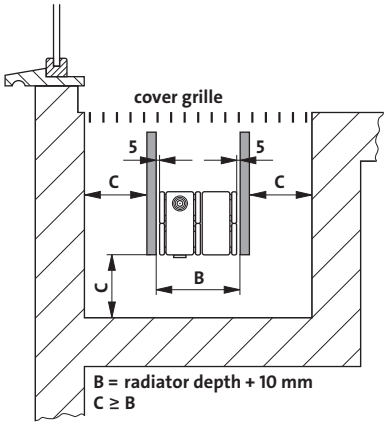

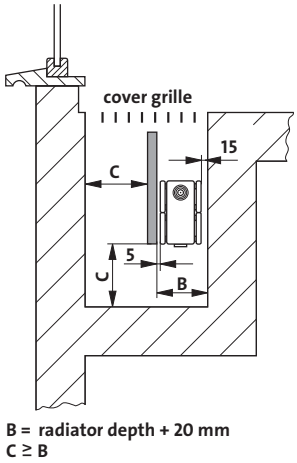

The covers between the channel walls and the radiator must be made from materials that do not conduct heat (e.g. wood, plastic, etc.). The lower edge of the screen must be on the same level with the lower edge of the radiator and the upper edge of the screen must be as close as possible to the channel cover grille (see the figure). The cover grill of the channel must be such that the surface area of the openings is equal to at least 60% of the total surface area of the grille. It is recommended to use grilles that are easily to disassemble so as to enable keeping the channels clean. Installation of radiators in a channel results in a reduction of their heating output by approx. 20% compared to the values given in the heating output table for the relevant radiator type.

NARBONNE VT, NARBONNE M NARBONNE

Installation tips

Horizontal version of Narbonne VT, Narbonne M, and Narbonne radiators

Location of radiators

under a window sill

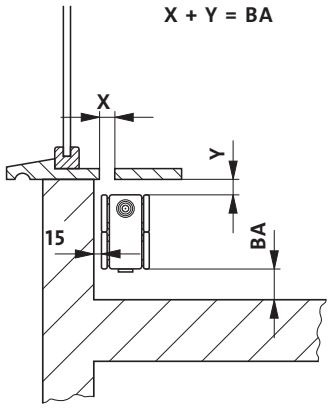

under a bench

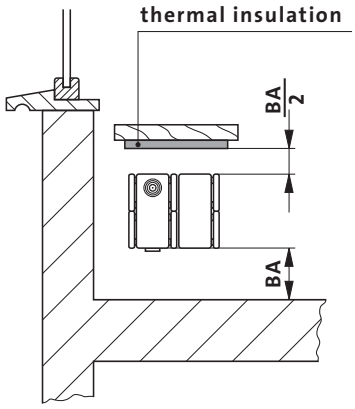

near a glazed surface

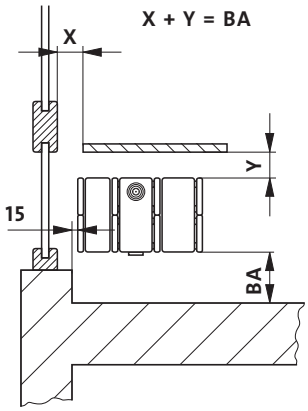

under a display window

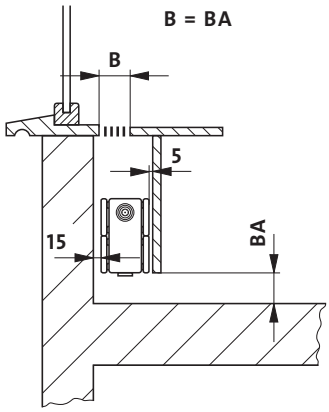

Recommended minimum distance from the floor

	BA [mm]	Narbonne VT		Narbonne M		Narbonne	
		type	height [mm]	type	height [mm]	type	height [mm]
BA = distance from the floor [mm] The recommended minimum distances from the floor apply to all the figures on pages 116 and 117	**60**	NA 11	214, 286	NA-M 11	214, 286	NA 11	214, 286
	60	NA 22	142	NA-M 22	142	NA 22	70, 142
	70	NA 23	142	NA-M 23	142	NA 23	70, 142
	80	NA 22	214, 286	NA-M 22	214, 286	NA 22	214, 286
	90	NA 23	214, 286	NA-M 23	214, 286	NA 23	214, 286
	100	NA 34	142	NA-M 34	142	NA 34	70, 142
	110	NA 34	214, 286	NA-M 34	214, 286	NA 34	214, 286
	120	NA 35	142	NA-M 35	142	NA 35	70, 142
	130	NA 35	214, 286	NA-M 35	214, 286	NA 35	214, 286
	130	NA 46	142	NA-M 46	142	NA 46	70, 142
	130	-	-	-	-	NA 58	70
	140	-	-	-	-	NA 46	214, 286
	140	-	-	-	-	NA 58	142
	150	-	-	-	-	NA 58	214, 286

Correction factors

heating medium temperature [°C]		value of the factor for selecting the heat output of the radiator at temperatures other than 75/65/20 °C							
		t_i air temperature in the heated room [°C]							
t_s	t_r	5	8	12	16	18	20	22	24
95	90	0.48	0.50	0.54	0.57	0.59	0.61	0.64	0.66
	85	0.50	0.52	0.56	0.60	0.62	0.64	0.67	0.70
	80	0.52	0.55	0.59	0.63	0.65	0.68	0.70	0.73
	75	0.54	0.57	0.61	0.66	0.69	0.72	0.75	0.78
	70	0.57	0.60	0.65	0.70	0.73	0.76	0.79	0.83
90	85	0.52	0.55	0.58	0.63	0.65	0.67	0.70	0.73
	80	0.54	0.57	0.61	0.66	0.68	0.71	0.74	0.77
	75	0.57	0.60	0.64	0.69	0.72	0.75	0.78	0.82
	70	0.59	0.63	0.67	0.73	0.76	0.80	0.83	0.87
	65	0.62	0.66	0.71	0.77	0.81	0.85	0.89	0.93
85	80	0.56	0.59	0.64	0.69	0.72	0.75	0.78	0.81
	75	0.59	0.62	0.67	0.72	0.75	0.79	0.82	0.86
	70	0.62	0.65	0.70	0.77	0.80	0.84	0.88	0.92
	65	0.65	0.69	0.75	0.81	0.85	0.89	0.94	0.99
	60	0.68	0.73	0.79	0.87	0.91	0.96	1.01	1.07
80	75	0.61	0.65	0.70	0.76	0.79	0.83	0.87	0.91
	70	0.64	0.68	0.74	0.81	0.84	0.88	0.93	0.97
	65	0.68	0.72	0.78	0.86	0.90	0.94	0.99	1.05
	60	0.72	0.76	0.83	0.91	0.96	1.01	1.07	1.13
	55	0.76	0.81	0.89	0.98	1.04	1.10	1.16	1.24
75	70	0.67	0.72	0.78	0.85	0.89	0.94	0.98	1.04
	65	0.71	0.75	0.82	0.90	0.95	1.00	1.05	1.12
	60	0.75	0.80	0.88	0.97	1.02	1.08	1.14	1.21
	55	0.80	0.85	0.94	1.04	1.10	1.17	1.24	1.32
	50	0.85	0.91	1.01	1.13	1.20	1.28	1.37	1.47
70	65	0.75	0.79	0.87	0.96	1.01	1.07	1.13	1.19
	60	0.79	0.84	0.93	1.03	1.08	1.15	1.22	1.30
	55	0.84	0.90	0.99	1.11	1.17	1.25	1.33	1.42
	50	0.89	0.96	1.07	1.20	1.28	1.37	1.47	1.58
65	60	0.83	0.89	0.98	1.10	1.16	1.23	1.31	1.40
	55	0.88	0.95	1.05	1.18	1.26	1.34	1.43	1.54
	50	0.94	1.02	1.14	1.29	1.37	1.47	1.59	1.71
60	55	0.94	1.01	1.13	1.27	1.36	1.45	1.56	1.68
	50	1.00	1.08	1.22	1.39	1.48	1.60	1.73	1.87
	45	1.08	1.17	1.33	1.53	1.65	1.78	1.94	2.13
55	50	1.07	1.16	1.31	1.50	1.62	1.75	1.90	2.07
	45	1.15	1.26	1.43	1.66	1.80	1.96	2.15	2.37
	40	1.25	1.37	1.59	1.86	2.03	2.24	2.48	2.78
50	45	1.23	1.36	1.56	1.82	1.98	2.17	2.40	2.67
	40	1.34	1.48	1.73	2.05	2.25	2.50	2.79	3.15
	35	1.47	1.65	1.94	2.36	2.63	2.96	3.38	3.92
45	40	1.45	1.62	1.90	2.28	2.53	2.83	3.19	3.66
	35	1.60	1.80	2.15	2.64	2.96	3.37	3.89	4.58
40	35	1.75	1.98	2.40	3.00	3.41	3.93	4.62	5.54
	30	1.96	2.25	2.79	3.61	4.21	5.01	6.14	7.87

The table has been prepared for n = 1.3

example:

The calculated room heat demand is 800 W. For the supply water the designed temperature is 55 °C, and for the return water it is 45°C. The designed air temperature in the room is 20 °C. For the values of parameters 55/45/20 °C, the correction factor value of 1.96 is red off.

As a result of multiplying heat demand (800 W) by the correction factor (1.96), the value of heat output (800 W) by the correction factor (1.96), the value of heat output is found (1568 W). This value is used for selection of the radiator for the values of parameters 75/65/20 °C.

NARBONNE VT, NARBONNE V VT NARBONNE M, NARBONNE V M

Hydraulic characteristics

Pressure loss diagram for the radiators Narbonne VT, Narbonne V VT, and Narbonne M with Danfoss valve inserts and Narbonne V M with a Danfoss thermostatic valve

Initial preset value

Base:	
supply temperature	**70 °C**
return temperature	**55 °C**
room temperature	**20 °C**

initial preset **1** for the radiators up to	k_v = 0.13 approx. 500 W
initial preset **2** for the radiators up to	k_v = 0.21 approx. 800 W
initial preset **3** for the radiators up to	k_v = 0.26 approx. 1000 W
initial preset **4** for the radiators up to	k_v = 0.31 approx. 1200 W
initial preset **5** for the radiators up to	k_v = 0.41 approx. 1600 W
initial preset **6** for the radiators up to	k_v = 0.52 approx. 2000 W
initial preset **7** for the radiators up to	k_v = 0.63 approx. 2400 W
initial preset **N** for the radiators from	k_v = 0.75 2400 W

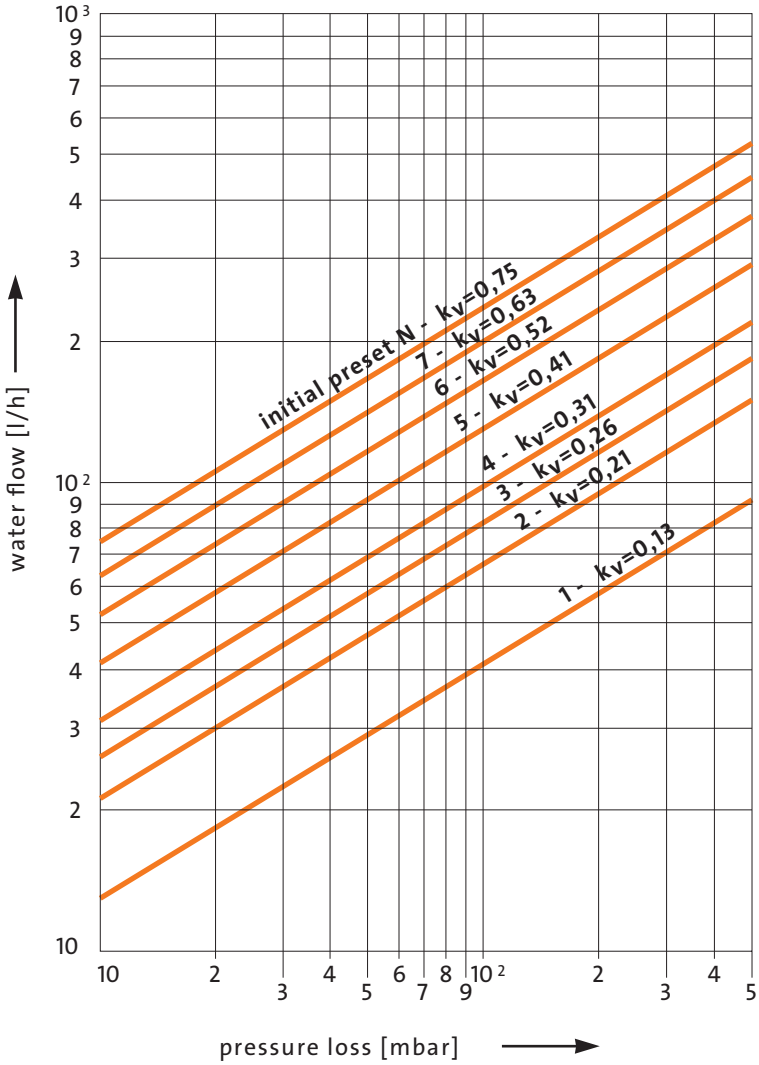

1 mbar = 100 Pa = 0,1 kPa

Pressure loss [mbar] – double-pipe system with proportional band 2K.

Corrections of the valve initial presets can also be entered in operating conditions (under working pressure).

Hydraulic characteristics

example of preset setpoint selection

given:

heat demand

Q_c = 1160 W

temperature difference

Δt = 20 K (np: 80/60 °C)

pressure drop

Δp = 6 kPa = 6000 Pa

calculation constant

C = 1.163

calculations:

mass flow of water

$$q = \frac{Q_c}{C \times \Delta t} = \frac{1160}{1.163 \times 20} = 50 \text{ kg/h}$$

For the flow q = 50 kg/h and the pressure flow 6000 Pa the preset setpoint value 3 is red off the nomogram.

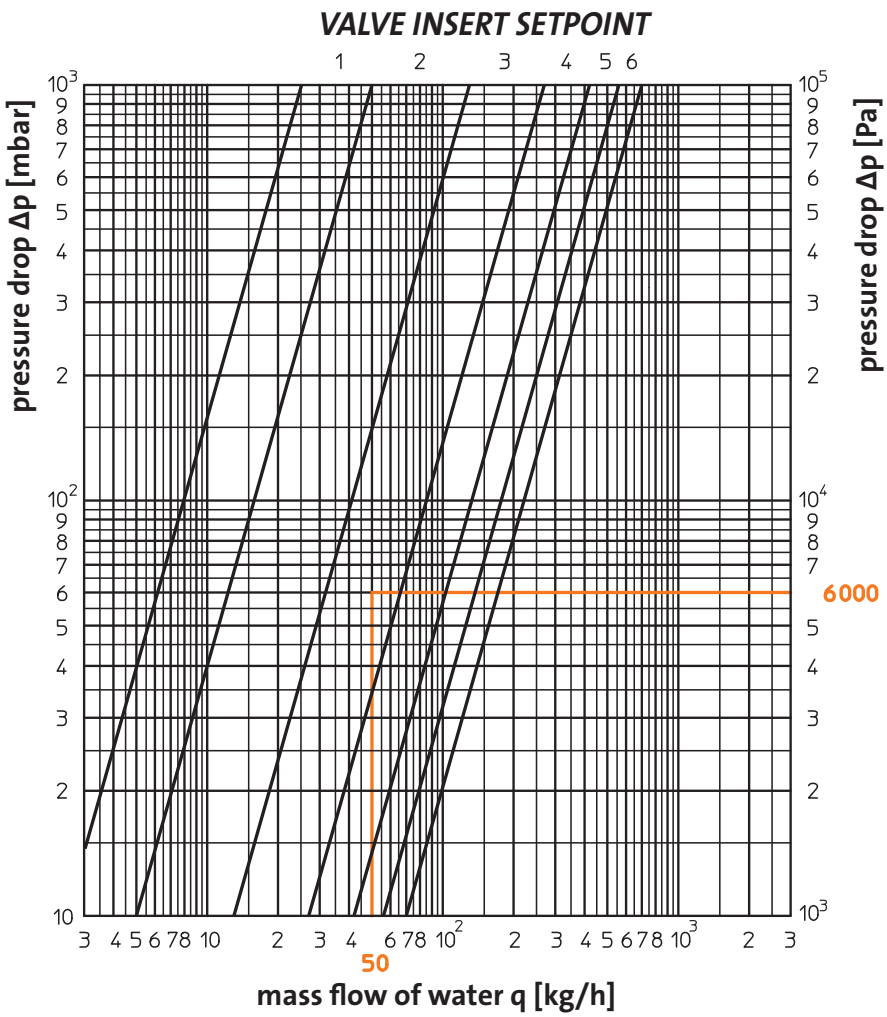

proportionality deviation	2K					
preset setpoint	1	2	3	4	5	6
kv [m³/h]	0.05	0.13	0.27	0.42	0.56	0.70

heat loss diameter for radiators Kos H and Faro H with an Oventrop valve insert

KOS V, FARO V, TINOS V, PAROS V, ARRAN

Accessories

	description	types	dimensions	order code
	towel rail for Kos V and Faro V radiators. Made of mat brushed stainless steel.	21, 22	300 mm	AZ14BTKF00030000
			450 mm	AZ14BTKF00045000
			600 mm	AZ14BTKF00060000
			750 mm	AZ14BTKF00075000
	towel rail for Tinos V radiators. Made of mat brushed stainless steel.	11	325 mm	AZ14BTTLT1132500
			475 mm	AZ14BTTLT1147500
			625 mm	AZ14BTTLT1162500
			775 mm	AZ14BTTLT1177500
		21	325 mm	AZ14BTT0T2132500
			475 mm	AZ14BTT0T2147500
			625 mm	AZ14BTT0T2162500
			775 mm	AZ14BTT0T2177500
	towel rail for Paros V radiators. Made of mat brushed stainless steel.	11	380 mm	AZ14BTPST1138000
			530 mm	AZ14BTPST1153000
			680 mm	AZ14BTPST1168000
			830 mm	AZ14BTPST1183000
		21	405 mm	AZ14BTP0T2140500
			555 mm	AZ14BTP0T2155500
			705 mm	AZ14BTP0T2170500
			855 mm	AZ14BTP0T2185500
	towel rail for Arran radiators.	open	514 mm	AZ1TR050C0001300
		closed	514 mm	AZ1TR050C0002300

NARBONNE VT, NARBONNE M NARBONNE

Accessories

	description	order code
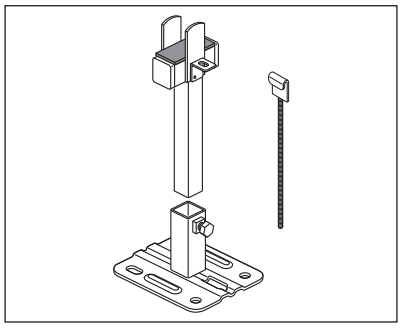	**SK 10 stand** (for the finished floor)**:** **Narbonne type: 11** **Narbonne VT type: 11** **Narbonne M type: 11** includes: - bottom foot (80 mm) - 1 pc., - upper foot (175 mm) with sound-insulated pad- 1 pc., - grip protecting against accidental removal - 1 pc. **Apply for radiators of height up to 286 mm (inclusive) only.** Colour RAL 9016*	AZ1BS000F1001000
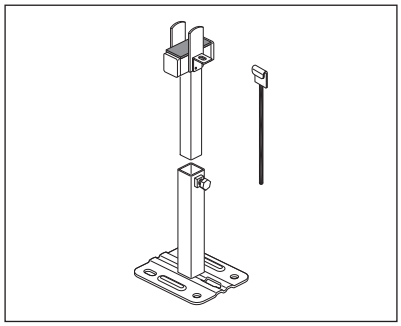	**SK 11 stand** (for the unfinished floor): **Narbonne type: 11** **Narbonne VT type: 11** **Narbonne M type: 11** includes: - bottom foot (175 mm) - 1 pc., - upper foot (200 mm) with sound-insulated pad- 1 pc., - grip protecting against accidental removal - 1 pc. **Apply for radiators of height up to 286 mm (inclusive) only.** Colour RAL 9016*	AZ1BS000R1101000
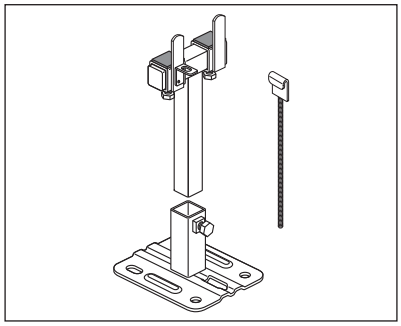	**SK 12 stand** (for the finished floor): **Narbonne type: 22, 23** **Narbonne VT type: 22, 23** **Narbonne M type: 22** includes: - bottom foot (80 mm) - 1 pc., - upper foot (175 mm) with sound-insulated pad - 1 pc., - grip protecting against accidental removal - 1 pc. **Apply for radiators of height up to 286 mm (inclusive) only.** Colour RAL 9016*	AZ1BS000F1201000
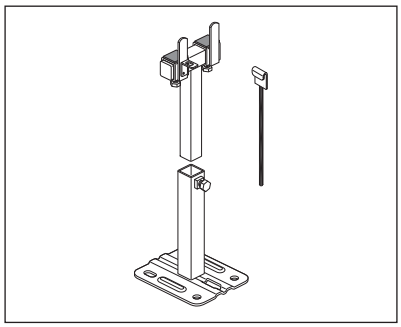	**SK 13 stand** (for the unfinished floor): **Narbonne type: 22, 23** **Narbonne VT type: 22, 23** **Narbonne M type: 22** includes: - bottom foot (175 mm) - 1 pc., - upper foot (200 mm) with sound-insulated pad - 1 pc., - grip protecting against accidental removal - 1 pc. **Apply for radiators of height up to 286 mm (inclusive) only.** Colour RAL 9016*	AZ1BS000R1301000
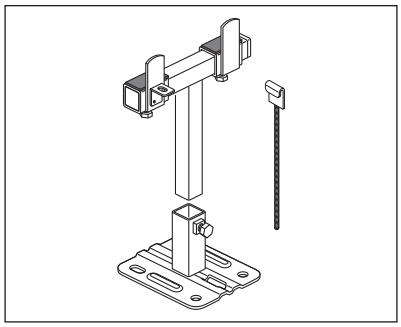	**SK 14 stand** (for the finished floor): **Narbonne type: 34, 35** **Narbonne VT type: 34, 35** **Narbonne M type: 34** includes: - bottom foot (80 mm) - 1 pc., - upper foot (175 mm) with sound-insulated pad - 1 pc., - grip protecting against accidental removal - 1 pc. **Apply for radiators of height up to 286 mm (inclusive) only.** Colour RAL 9016*	AZ1BS000F1401000

Accessories

	description	order code
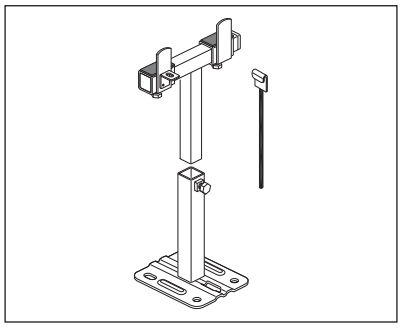	**SK 15 stand** (for the unfinished floor): **Narbonne type: 34, 35** **Narbonne VT type: 34, 35** **Narbonne M type: 34** includes: - bottom foot (175 mm) - 1 pc., - upper foot (200 mm) with sound-insulating pad - 1 pc., - grip protecting against accidental removal - 1 pc. **Apply for radiators of height up to 286 mm (inclusive) only.** Colour RAL 9016*	AZ1BS000R1501000
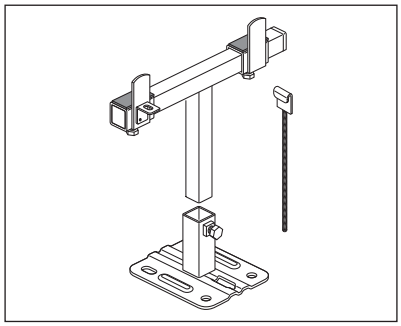	**SK 16 stand** (for the finished floor): **Narbonne type: 46** **Narbonne VT type: 46** **Narbonne M type: 46** includes: - bottom foot (80 mm) - 1 pc., - upper foot (175 mm) with sound-insulating pad - 1 pc., - grip protecting against accidental removal - 1 pc. **Apply for radiators of height up to 286 mm (inclusive) only.** Colour RAL 9016*	AZ1BS000F1601000
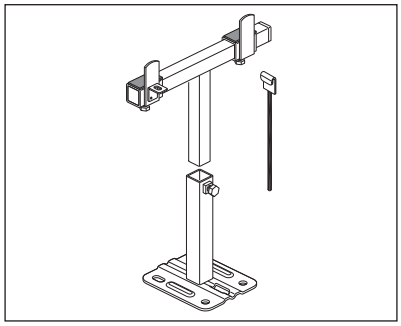	**SK 17 stand** (for the unfinished floor): **Narbonne type: 46** **Narbonne VT type: 46** **Narbonne M type: 46** includes: - bottom foot (175 mm) - 1 pc., - upper foot (200 mm) with sound-insulating pad - 1 pc., - grip protecting against accidental removal - 1 pc. **Apply for radiators of height up to 286 mm (inclusive) only.** Colour RAL 9016*	AZ1BS000R1701000
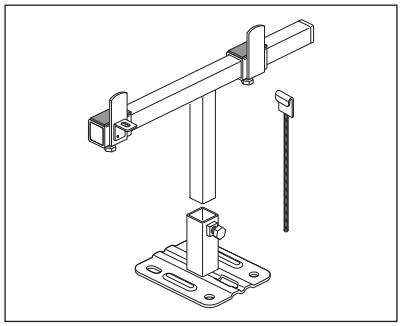	**SK 18 stand** (for the finished floor): **Narbonne type: 47, 58** **Narbonne VT type: 47** includes: - bottom foot (80 mm) - 1 pc., - upper foot (175 mm) with sound-insulating pad - 1 pc., - grip protecting against accidental removal - 1 pc. **Apply for radiators of height up to 286 mm (inclusive) only.** Colour RAL 9016*	AZ1BS000F1801000
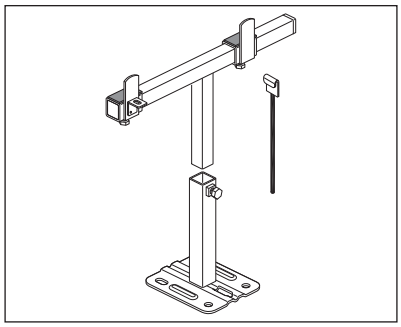	**SK 19 stand** (for the unfinished floor): **Narbonne type: 47, 58** **Narbonne VT type: 47** includes: - bottom foot (175 mm) - 1 pc., - upper foot (200 mm) with sound-insulating pad - 1 pc., - grip protecting against accidental removal - 1 pc. **Apply for radiators of height up to 286 mm (inclusive) only.** Colour RAL 9016*	AZ1BS000R1901000

Accessories

	description	order code
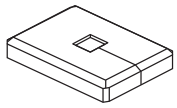	**Stand cover:** **SK 10, SK 12, SK 14, SK 16, SK 18**	AZ1MS000C1001000
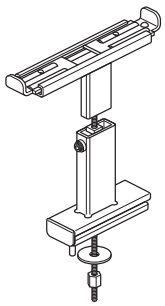	**Support FBT 20** Windowsill support for inter installation on radiators: **Narbonne type: NA/NA-S 22 - 58** **Narbonne VT type: NA/NA-S 22 - 47** **Narbonne M type: NA-M 22 - 46** includes: top part, bottom part, thread bar with gasket and nut. Colour RAL 9016*	AZ1SM02900001000
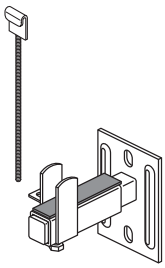	**WK 10 brackets** **Narbonne type: 11** **Narbonne VT type: 11** includes: - wall bracket - 1 pc., - detachable fixing bracket with sound-insulating pad - 1 pc., - grip protecting against accidental removal - 1 pc. **Apply for radiators of height up to 286 mm (inclusive) only.** Colour RAL 9016*	AZ1BW000110010 00
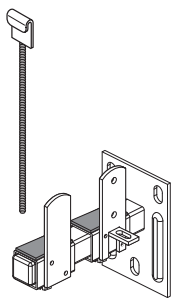	**WK 10-M brackets** **Narbonne type: 22** **Narbonne VT type: 22** **Narbonne M type: 22** includes: - wall bracket - 1 pc., - detachable fixing bracket with sound-insulating pad - 1 pc., - grip protecting against accidental removal - 1 pc. **Apply for radiators of height up to 286 mm (inclusive) only.** Colour RAL 9016*	AZ1BW000110010A0
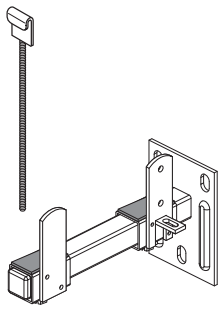	**WK 11-M brackets** **Narbonne type: 23, 34** **Narbonne VT type: 23, 34** **Narbonne M type: 34** includes: - wall bracket - 1 pc., - detachable fixing bracket with sound-insulating pad - 1 pc., - grip protecting against accidental removal - 1 pc. **Apply for radiators of height up to 286 mm (inclusive) only.** Colour RAL 9016*	AZ1BW000111010A0

Accessories

	description	order code
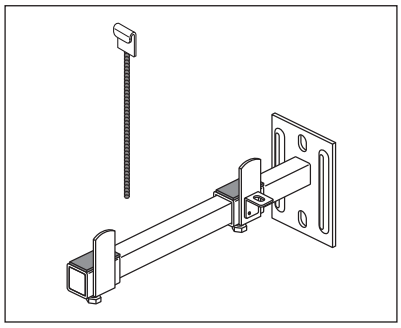	**WK 12 brackets** **Narbonne type: 35, 46** **Narbonne VT type: 35, 46** **Narbonne M type: 46** includes: - wall bracket - 1 pc., - detachable fixing bracket with sound-insulating pad - 1 pc., - grip protecting against accidental removal - 1 pc. **Apply for radiators of height up to 286 mm (inclusive) only.** Colour RAL 9016*	AZ1BW00011201000
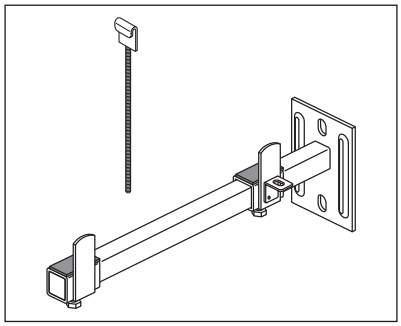	**WK 13 brackets** **Narbonne type: 58** includes: - wall bracket - 1 pc., - detachable fixing bracket with sound-insulating pad - 1 pc., - grip protecting against accidental removal - 1 pc. **Apply for radiators of height up to 286 mm (inclusive) only.** Colour RAL 9016*	AZ1BW00011301000
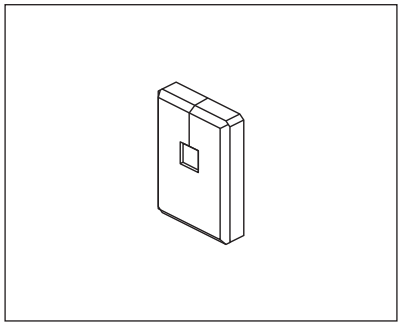	**wall bracket cover:** **WK 10** up to **WK 13**	AZ1MW00010001000

* Brackets and wall hangers in other colours are available with special orders (with the exception of sliding elements), with an additional charge in the case of colour radiators. The method of creation of an article code is the following: depending on the ordered RAL (R) colour, the last character in the code of a white version changes to a letter that corresponds to the respective colour and the number of the code is added; e.g. the code of a WK12 bracket in the colour RAL 9005 is the following: AZ1BW0001120100**R9005**.

NARBONNE V, NARBONNE V VT NARBONNE V M

Accessories

	description	order code
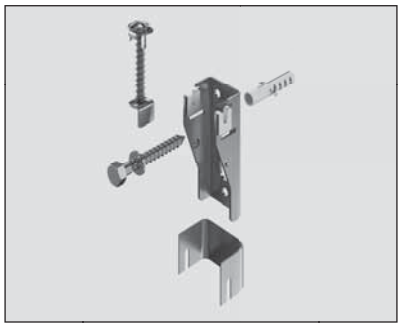	**WA 10 - 20 bracket:** for the vertical version of 142 mm and 214 mm wide radiators of the following types: **Narbonne V type: 20, 21** **Narbonne V M type: 20, 21** **Narbonne V VT type: 20, 21** includes: - wall bracket - 1 pc., - distancing grip - 1 pc., - crew - 1 pc., wall plug - 1 pc., - overall sound-insulated	AZ1BU120A0001000
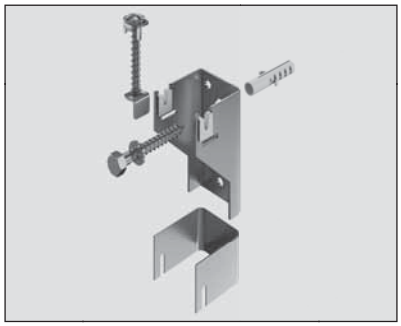	**WA 10 - 40 bracket:** for the vertical version of 142 mm and 214 mm wide radiators of the following types: **Narbonne V type: 10, 11** **Narbonne V M type: 10, 11** **Narbonne V VT type: 10, 11** includes: - wall bracket - 1 pc., - distancing grip - 1 pc., - crew - 1 pc., wall plug - 1 pc., - overall sound-insulated	AZ1BU140A0001000
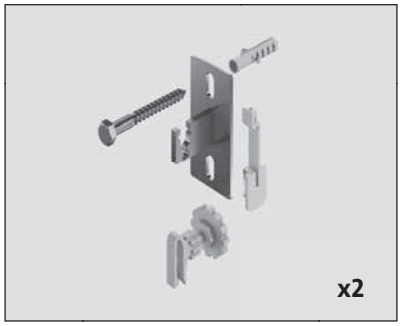	**WA 11 - 30 bracket:** for the vertical version of 286 mm plus wide radiators of the following types: **Narbonne V type: 20, 21** **Narbonne V M type: 20, 21** **Narbonne V VT type: 20, 21** for the horizontal version of 358 mm plus high radiators of the following types: **Narbonne type: 20, 22** **Narbonne M type: 20, 22** **Narbonne VT type: 20, 22** includes: - wall bracket - 2 pc., - distancing grip - 2 pc., - screws and wall plugs, - overall sound-insulated	AZ1BU130K0001000
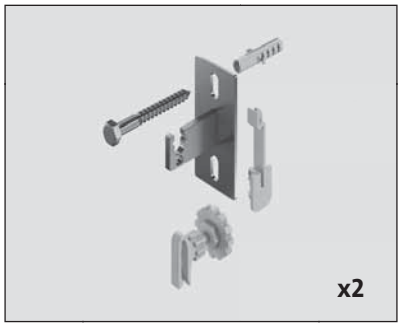	**WA 11 - 40 bracket:** for the vertical version of 286 mm plus wide radiators of the following types: **Narbonne V type: 10, 11** **Narbonne V M type: 10, 11** **Narbonne V VT type: 10, 11** for the horizontal version of 358 mm plus high radiators of the following types: **Narbonne type: 11** **Narbonne M type: 11** **Narbonne VT type: 11** includes: - wall bracket - 2 pc., - distancing grip - 2 pc., - screws and wall plugs, - overall sound-insulated	AZ1BU140K0001000

Thermostatic heads for radiators

For proper operation, the decorative radiators **Kos H and Faro H** with a built-in valve insert require an appropriate thermostatic head. Examples of types and manufacturers of thermostatic heads compatible with the new Oventrop valve inserts.

MANUFACTURER	CATALOGUE NUMBER
Purmo Sensor	AZ02HESENSOM3030
Purmo Evosense (white)	AZ02HE5010283000
Purmo Evosense (black)	AZ02HE5050283000
Comap Senso RI	100 100
Danfoss RAW-K 5135	013G5135
Heimeier K	6000-00.500, 6020-00.500 6040-00.500
Heimeier DX	6700-00.500
Heimeier D	6850-00.500
Heimeier B	2500-00.500, 2502-00.500
Heimeier WK	7300-00.500
Heimeier VD	7400-00.500
Herz Classic „H”	1 7260 98, 1 9260 98, 1 7330 98, 1 9330 98
Herz Mini „H”	1 9200 68, 1 9200 38

MANUFACTURER	CATALOGUE NUMBER
Herz Herzcules „H”	1 9860 98
Honeywell Thera 2	T9001H(...), T9001W(...), T9001 08, T9001 20, T9001 50
Honeywell Thera 3	T6001H(...), T6001W(...), T6001 08, T6001 20, T6001 50
Honeywell Thera 4	T3001, T2001
Oventrop UNI XH	101 1365
Oventrop UNI LH	101 1465, 67, 68, 69
Oventrop UNI CH	101 1265
Oventrop UNI DH	101 1065
Oventrop UNI SH	101 2065
Schlosser Diamant	6001 00001
Schlosser Brillant	6002 0000 (...)
Valvex GZ 05A	4440010, 4440410
Valvex GZ 07A	4445000

Radiators **Kos V, Faro V, Tinos V, Paros V and Arran** are not equipped with a valve insert with pre-regulation. They can be connected through specially combined thermostatic valve with 50 mm spacing.
Examples of types and manufacturers are presented in the table.

MANUFACTURER	CATALOGUE NUMBER	
	VALVE	HEAD
Danfoss VHX-DUO + RAX	013G4281 – white finishing RAL9016 013G4279 – chromium plated finishing	
Heimeier Multilux	3851-02.000 3850-02.000	as for the decorative radiators with a valve insert
Herz	1 3692 91 1 3694 91	1 9260 06, 1 7260 06, 1 9200 60, 1 7260 40
Honeywell Therafix	V2474YE0015 V2474YD0015	as for the decorative radiators with a valve insert
Oventrop Multiblock T	118 40 83 118 40 84	as for the decorative radiators with a valve insert
Schlosser Duo-plex	6021 00001, 6021 00003, 6021 00005, 6021 00007	as for the decorative radiators with a valve insert

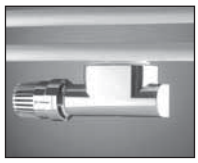

Decorative radiators **Narbonne VT, Narbonne V VT, and Narbonne M** are equipped with a Danfoss valve insert with pre-regulation. It works with the following heads

MANUFACTURER	CATALOGUE NUMBER
Danfoss RAW 5115	013G5115
Danfoss RA 2994	013G2994
Heimeier VK	9710-24.500
Honeywell Thera-4 DA	T3001DA
Oventrop Uni XD	1011374

Radiators **Narbonne, Narbonne V, and Narbonne V M** are not factory-equipped with a valve insert with pre-regulation.
As a result, they can be connected to central heating systems through external thermostatic valves of any brand.
Radiators **Narbonne V M** are factory-equipped with a Danfoss thermostatic valve set with pre-regulation.
The valve set can work with thermostatic heads (not supplied with the valve) specified in the table above for radiators **Narbonne VT, Narbonne V VT, and Narbonne M**.

VIDO

The Vido fan convector has been designed to provide both pleasant warmth in the middle of the winter, as well as a refreshing chill in the middle of the summer. A built-in electronic controller regulates the parameters of the system to provide optimal comfort conditions in the room.

- Length : 800, 1000, 1200, 1400, 1600 mm
- Height : 595 mm
- Depth : 153 mm
- Exchanger composition : aluminum finned copper pipes
- Casing material : RAL 9016 white, powder coated steel sheet metal
- Connections :
  two-pipe system 2 x GW 3/4" – internal thread
  four-pipe system 4 x GW 3/4" – internal thread
- Working pressure : 10 bar
- Maximal temperature : 110 °C
- Test pressure : 13 bar
- Accessories : 4 screws and wall plugs for wall mounting

- Fan convector equipment :
  contact temperature sensor for heating/cooling medium in the system, room air temperature sensor
- Optional equipment :
  control and balancing valve with pressure-independent flow and 230 V actuator
- Standard electrical equipment :
  switchboard for connecting power supply and auxiliary equipment (a module with centrifugal fans driven by a 230 V/50 Hz motor, an optional control valve with an actuator or a central BMS control system)
- Standard electronic equipment :
  electronic controller with time programs for operation in a simplified or extended system

NOTE:
The device is delivered with factory-connected test conductors that must be replaced with proper service conductors of cross-section 0.75 mm².

VIDO

two-pipe system - heating or cooling

dimensions

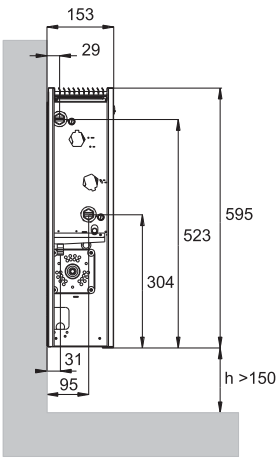

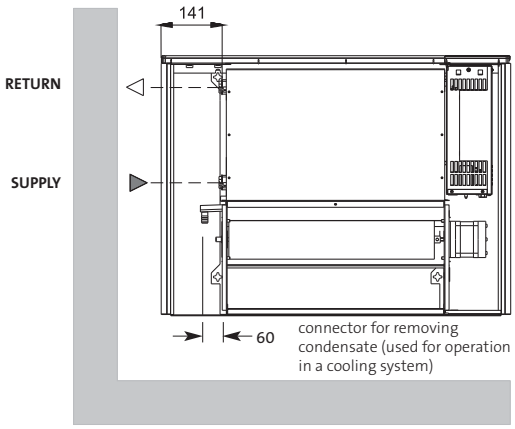

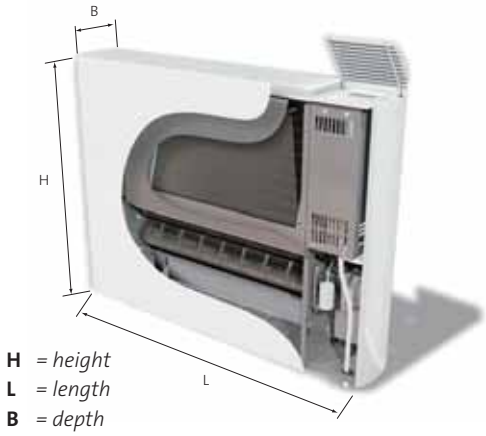

parameters t_z / t_p / t_i	fan speed	heat output [W]				
		K2A 080	K2A 100	K2A 120	K2A 140	K2A 160
75/65/20 °C	high	3682	5124	6521	7894	9266
	medium	2678	3661	4448	5265	6082
	low	1997	2739	3288	3867	4460
45/35/20 °C	high	1360	1892	2409	2916	3422
	medium	989	1352	1643	1945	2246
	low	738	1012	1214	1428	1647

parameters t_z / t_p / t_i	fan speed		cooling output [W]				
			K2A 080	K2A 100	K2A 120	K2A 140	K2A 160
7/12/27 °C	high	total	1648	2304	2918	3533	4147
		sensible	1227	1716	2173	2631	3088
	medium	total	1126	1600	1960	2320	2679
		sensible	829	1178	1442	1707	1972
	low	total	707	1011	1520	1490	1729
		sensible	527	753	931	1110	1288

type	H [mm]	L [mm]	B [mm]	order code
K2A 080	595	800	153	F9PA02308012P340
K2A 100	595	1000	153	F9PA02310012P340
K2A 120	595	1200	153	F9PA02312012P340
K2A 140	595	1400	153	F9PA02314012P340
K2A 160	595	1600	153	F9PA02316012P340

VIDO

four-pipe system - heating and cooling

dimensions

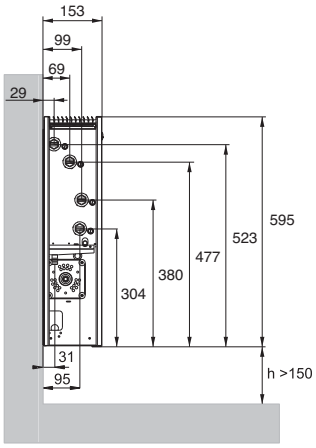

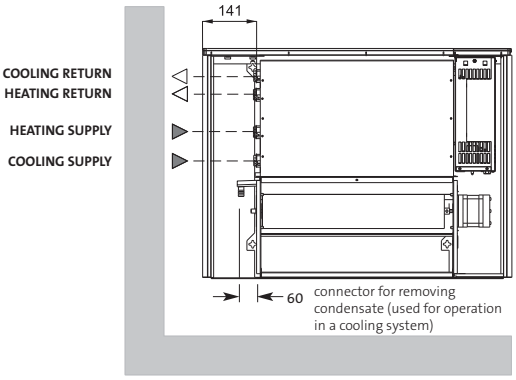

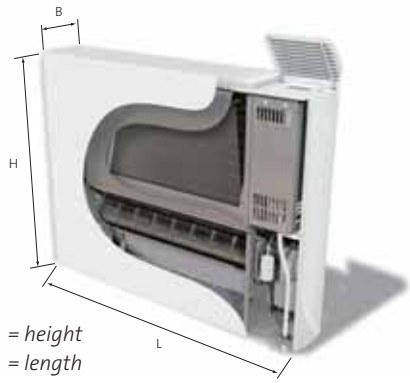

H = *height*
L = *length*
B = *depth*

parameters t_z / t_p / t_i	fan speed	heat output [W]				
		K4A 080	K4A 100	K4A 120	K4A 140	K4A 160
75/65/20 °C	high	2577	3587	4565	5526	6486
	medium	1875	2563	3114	3686	4257
	low	1398	1917	2302	2707	3122
45/35/20 °C	high	952	1324	1686	2041	2395
	medium	692	946	1150	1362	1572
	low	517	708	850	1000	1153

parameters t_z / t_p / t_i	fan speed		cooling output [W]				
			K4A 080	K4A 100	K4A 120	K4A 140	K4A 160
7/12/27 °C	high	total	1566	2189	2772	3356	3940
		sensible	1166	1630	2064	2499	2934
	medium	total	1070	1520	1862	2204	2545
		sensible	788	1119	1370	1622	1873
	low	total	672	960	1444	1416	1643
		sensible	501	715	884	1055	1224

type	H [mm]	L [mm]	B [mm]	order code
K4A 080	595	800	153	F9PA02308014P340
K4A 100	595	1000	153	F9PA02310014P340
K4A 120	595	1200	153	F9PA02312014P340
K4A 140	595	1400	153	F9PA02314014P340
K4A 160	595	1600	153	F9PA02316014P340

Accessories

description	technical specifications	order code
Condensate Pump Kit	230V Condensate pump kit including mounting brackets, float switch, and 2m flexible tube for condensate removal	AZ57CKPUMP230V30
System Valve (2-Pipe Kit)	Pressure independent balancing and control valve with 230V actuator	AZ57CKVK2P230V30
System Valve (4-Pipe Kit)	Two pressure independent balancing and control valves with two 230V actuators	AZ57CKVK4P230V30
Outdoor temperature sensor	An outdoor temperature sensor for the two-pipe version of the fan coil operating in the cooling mode (for the four-pipe version of the fan coil, the sensor is delivered along with the heater)	AZ57CKRSKWH00

Type overview

Santorini

4 connections

height [mm]:
714, 1134, 1470, 1764

width [mm]:
400, 500, 600, 750, 900

Kea

4 connections

height [mm]:
1022, 1262, 1502, 1742

width [mm]:
600, 750, 900

Santorini A

6 connections

height [mm]:
714, 1134

width [mm]:
400, 500, 600, 750

Ratea

2 connections

height [mm]:
796, 1196, 1756

width [mm]:
500, 600, 750

Santorini C

4 connections

height [mm]:
714, 1134, 1470, 1764

width [mm]:
399, 498, 596, 742, 887

Imia

3 connections

height [mm]:
1600, 1800

width [mm]:
510, 822, 1030, 1238

Type overview

Mauritius

3 connections

height [mm]:
1194, 1754, 2154

width [mm]:
500, 600, 750, 900

Flores CH

4 connections

height [mm]:
770, 1150, 1430, 1755

width [mm]:
500, 600

Java

2 connections

height [mm]:
700, 912, 1336,
1548, 1760, 1972

width [mm]:
400, 500, 600

Flores C CH

4 connections

height [mm]:
770, 1150, 1430, 1755

width [mm]:
500, 600

Muna

2 connections

height [mm]:
530*, 680*, 905, 1205,
1650, 1730, 2030

width [mm]:
500, 600, 800,
1000*, 1200*

Elato

4 connections

height [mm]:
830, 1130, 1430, 1730

width [mm]:
450, 600

*for horizontal radiators

Type overview

Apolima

2 connections

height [mm]:
830, 1130, 1430, 1730

width [mm]:
650, 800

Leros

6 connections

height [mm]:
1224, 1812

width [mm]:
600

Apia

6 connections

height [mm]:
1196, 1756

width [mm]:
500, 600, 750, 900

Evia

2 connections

height [mm]:
1357, 1657

width [mm]:
600

	Santorini	Santorini A	Santorini C	Kea	Ratea	Imia	Mauritius	Java	Muna	Flores CH	Flores C CH	Elato	Apolima	Apia	Leros	Evia
max. working pressure [bar]	10	10	10	10	10	10	10	8	4	8	8	4	4	10	10	4
number of connections	4	6	4	4	2	3	3	2	2	4	4	4	2	6	6	2
bottom connection	x	x	x	-	-	x	-	x	x	x	x	x	x	x	x	x
bottom connection with connectors spaced at 50 mm	-	-	-	-	x	-	-	-	-	-	-	-	-	-	-	x
same end connection, right or left side	-	x	-	-	-	-	-	-	-	-	-	-	-	-	-	-
mid-bottom with connectors spaced at 50 mm	-	-	-	x	-	-	x	-	-	-	-	-	x	x	x	-
air vent - diameter	1/2”	1/2”	1/2”	1/4”	1/4”	1/4”	1/2”	1/8”	1/8”	1/2”	1/2”	1/8”	1/8”	1/2”	1/2”	1/2”
number of brackets in a bundle	3 or 4	3	4	4	3 or 4	4	2 or 3 + floor kit	4	4	4	4	2	2	4	4	2

thermal output of the radiators

Thermal output of the radiators was determined in accordance with EN 442 based on laboratory measurements.
The temperatures of 75/65/20 °C were accepted as reference values.
Thermal output of the radiators for other values can be calculated with the following formula:

$$\phi = \phi_n \left[\frac{\Delta t}{\Delta t_n} \right]^n$$

where:
ϕ - thermal output of the radiator [W]
ϕ_n - thermal output of the radiator determined based on measurements in accordance with EN 442 [W]
Δt - logarithmic difference of temperatures [K]
Δt_n - logarithmic difference of temperatures 49.833 [K] calculated for reference temperatures 75/65/20 °C
n - exponent characteristic for a given type of radiator

The logarithmic difference of temperatures is calculated according to the following formula:

$$\Delta t = \frac{t_s - t_r}{\ln\left((t_s - t_i) / (t_r - t_i)\right)}$$

where:
t_s - supply water temperature [°C]
t_r - return water temperature [°C]
t_i - room temperature [°C]

SANTORINI AND SANTORINI A

Straight lines of the Santorini model make its appearance timeless and classic. It is a perfect element of every bathroom.
The Santorini A radiator is an excellent solution for those, who want to replace their old radiator with a new one without the need for modifications of piping. The model is available with right or left side connectors.

- Material : high quality steel round tubes
- Heating medium : water
- Connections : 4 threaded ½" female connections
- Working pressure : 10 bar
- Maximal temperature : 110 °C
- Painting : anaphoretic priming, final painting with the use of electrostatic powder coating
- Colours : RAL 9016 white, other colours from the RAL colour chart are available on request
- Basic equipment: brackets with adjustable wall distance, ½" air vent, blanking plug (Santorini A - three blanking plugs).
- Additional equipment: round chrome plated towel hanger, C-type chrome plated hanger, electric heater.

SANTORINI AND SANTORINI A

front view

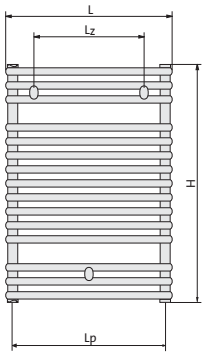

Santorini

side view

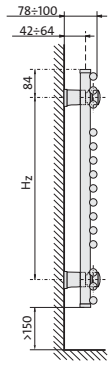

Santorini

top view

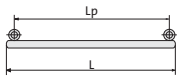

Santorini

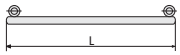

Santorini A

front view

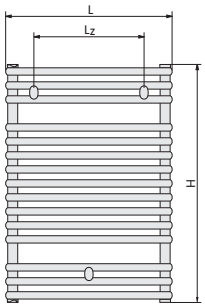

Santorini A

side view

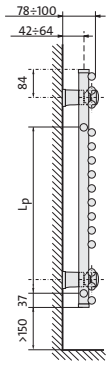

Santorini A

dimensions in mm

SA. 07 ..

SA. 11 ..

SAN 15 ..

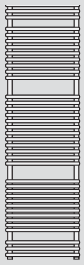

SAN 18 ..

H = *height*
L = *width*
Hz = *vertical spacing of brackets*
Lz = *horizontal spacing of brackets*
Lp = *spacing of connectors*

type	output [W] 75/65/20	output [W] 55/45/20	H [mm]	L [mm]	brackets Hz [mm]	brackets Lz [mm]	Lp [mm]	water volume [dm³]	weight [kg]	number of horizontal collectors	order code
SAN 07 04	300	153	714	400	546	250	360	2.3	5.8	15	F3NA007004000000
SAN 07 05	370	189	714	500	546	350	460	2.8	6.8	15	F3NA007005000000
SAN 07 06	435	222	714	600	546	450	560	3.2	7.8	15	F3NA007006000000
SAN 07 07	529	270	714	750	546	600	710	3.9	9.2	15	F3NA007007500000
SAN 07 09	622	317	714	900	546	750	860	4.6	10.6	15	F3NA007009000000
SAN 11 04	465	237	1134	400	966	250	360	3.8	8.9	23	F3NA011004000000
SAN 11 05	569	290	1134	500	966	350	460	4.5	10.4	23	F3NA011005000000
SAN 11 06	665	339	1134	600	966	450	560	5.3	11.8	23	F3NA011006000000
SAN 11 07	805	411	1134	750	966	600	710	6.4	13.9	23	F3NA011007500000
SAN 11 09	940	480	1134	900	966	750	860	7.5	16	23	F3NA011009000000
SAN 15 05	733	374	1470	500	1302	350	460	6.1	13.3	29	F3NA015005000000
SAN 15 06	856	437	1470	600	1302	450	560	7.0	15.2	29	F3NA015006000000
SAN 15 07	1035	528	1470	750	1302	600	710	8.2	18.0	29	F3NA015007500000
SAN 15 09	1208	616	1470	900	1302	750	860	9.5	20.9	29	F3NA015009000000
SAN 18 05	894	456	1764	500	1596	350	460	7.5	15.8	36	F3NA018005000000
SAN 18 06	1038	530	1764	600	1596	450	560	8.5	18.2	36	F3NA018006000000
SAN 18 07	1246	636	1764	750	1596	600	710	9.9	21.7	36	F3NA018007500000
SAN 18 09	1447	738	1764	900	1596	750	860	11.3	25.2	36	F3NA018009000000
SAA 07 04 R	300	153	714	400	546	250	500	2.3	5.8	15	F3UAB07004000000
SAA 07 05 R	370	189	714	500	546	350	500	2.8	6.8	15	F3UAB07005000000
SAA 07 06 R	435	222	714	600	546	450	500	3.2	7.8	15	F3UAB07006000000
SAA 07 07 R	529	270	714	750	546	600	500	3.9	9.2	15	F3UAB07007500000
SAA 11 04 R	465	237	1134	400	966	250	500	3.8	8.9	23	F3UAB11004000000
SAA 11 05 R	569	290	1134	500	966	350	500	4.5	10.4	23	F3UAB11005000000
SAA 11 06 R	665	339	1134	600	966	450	500	5.3	11.8	23	F3UAB11006000000
SAA 11 07 R	805	411	1134	750	966	600	500	6.4	13.9	23	F3UAB11007500000

Thermal output of the radiators [W] in accordance with EN 442 for parameters 75/65/20 °C and 55/45/20 °C.

SANTORINI C

Round horizontal collectors of the Santorini C model are slightly bent to form an arc giving the radiator lightness and elegancy.

- Material : high quality steel round tubes
- Heating medium : water
- Connections : 4 threaded ½" female connections
- Working pressure : 10 bar
- Maximal temperature : 110 °C
- Painting : anaphoretic priming, final painting with the use of electrostatic powder coating
- Colours : RAL 9016 white, other colours from the RAL colour chart are available on request
- Basic equipment : brackets with adjustable wall distance, ½" air vent, blanking plug.
- Additional equipment : round chrome plated towel hanger, electric heater.

SANTORINI C

front view

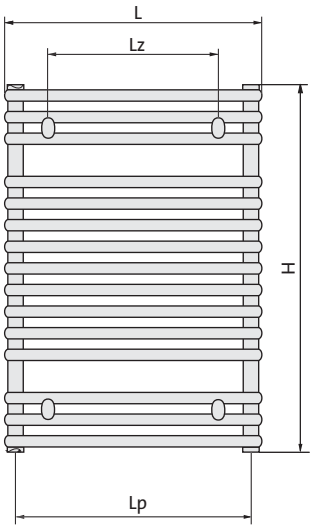

side view

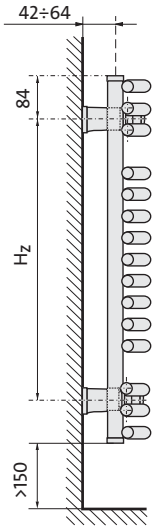

top view

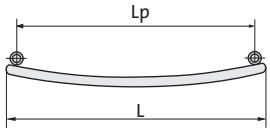

H = *height*
L = *width*
Lz = *horizontal spacing of brackets*
Hz = *vertical spacing of brackets*
Lp = *spacing of connectors*

dimensions in mm

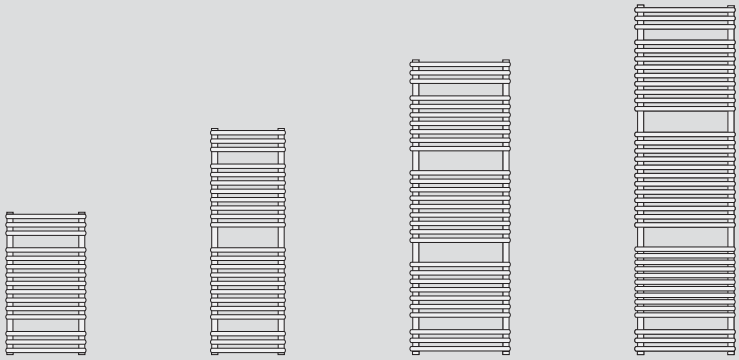

SAC 07 .. SAC 11 .. SAC 15 .. SAC 18 ..

type	output [W]		H	L	brackets		Lp	water volume	weight	number of horizontal collectors	order code
	75/65/20	55/45/20	[mm]	[mm]	Hz [mm]	Lz [mm]	[mm]	[dm³]	[kg]		
SAC 07 04	300	153	714	399	546	220	353	2.3	5.8	15	F3VA007004000000
SAC 07 05	370	189	714	498	546	320	451	2.8	6.8	15	F3VA007005000000
SAC 07 06	435	222	714	596	546	420	548	3.2	7.8	15	F3VA007006000000
SAC 07 07	529	270	714	742	546	565	691	3.9	9.2	15	F3VA007007500000
SAC 07 09	622	317	714	887	546	730	835	4.6	10.6	15	F3VA007009000000
SAC 11 04	465	237	1134	399	966	220	353	3.8	8.9	23	F3VA011004000000
SAC 11 05	569	290	1134	498	966	320	451	4.5	10.4	23	F3VA011005000000
SAC 11 06	665	339	1134	596	966	420	548	5.3	11.8	23	F3VA011006000000
SAC 11 07	805	411	1134	742	966	565	691	6.4	13.9	23	F3VA011007500000
SAC 11 09	940	480	1134	887	966	730	835	7.5	16.0	23	F3VA011009000000
SAC 15 05	733	374	1470	498	1302	320	451	6.1	13.3	29	F3VA015005000000
SAC 15 06	856	437	1470	596	1302	420	548	7.0	15.2	29	F3VA015006000000
SAC 15 07	1035	528	1470	742	1302	565	691	8.2	18.0	29	F3VA015007500000
SAC 15 09	1208	616	1470	887	1302	730	835	9.5	20.9	29	F3VA015009000000
SAC 18 05	894	456	1764	498	1596	320	451	7.5	15.8	36	F3VA018005000000
SAC 18 06	1038	530	1764	596	1596	420	548	8.5	18.2	36	F3VA018006000000
SAC 18 07	1246	636	1764	742	1596	565	691	9.9	21.7	36	F3VA018007500000
SAC 18 09	1447	738	1764	887	1596	730	835	11.3	25.2	36	F3VA018009000000

Thermal output of the radiators [W] in accordance with EN 442 for parameters 75/65/20 °C and 55/45/20 °C.

KEA

Horizontal collectors of the Kea model spread to both sides to form rhythmic sequences. The structure allows for hanging many towels.

- Material : high quality steel round tubes
- Heating medium : water
- Connections : 4 threaded ½" female connections
- Working pressure : 10 bar
- Maximal temperature : 110 °C
- Painting : anaphoretic priming, final painting with the use of electrostatic powder coating
- Colours : RAL 9016 white, other colours from the RAL colour chart are available on request

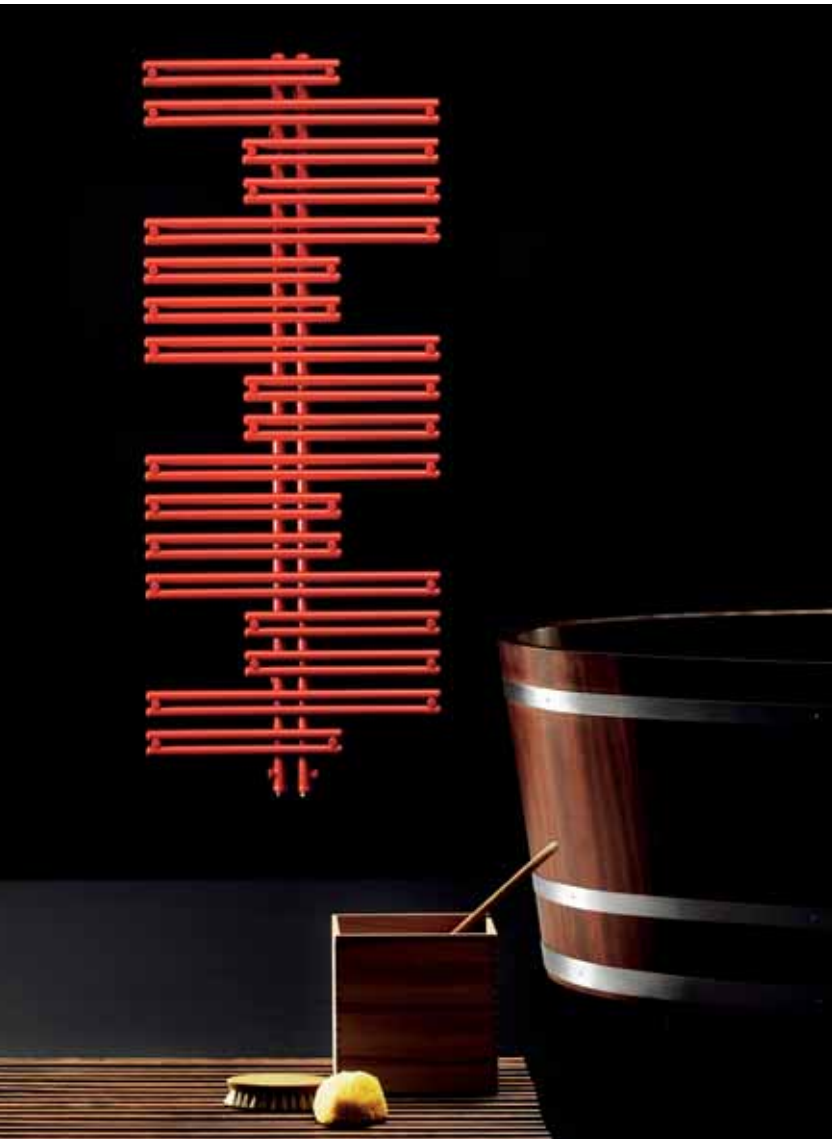

- Basic equipment : brackets with adjustable wall distance, ¼" air vent, two blanking plugs
- Additional equipment : straight chrome plated hanger, bent chrome plated hanger, glass shelf, C-type chrome plated hanger, round chrome plated towel hanger, electric heater.

KEA

front view

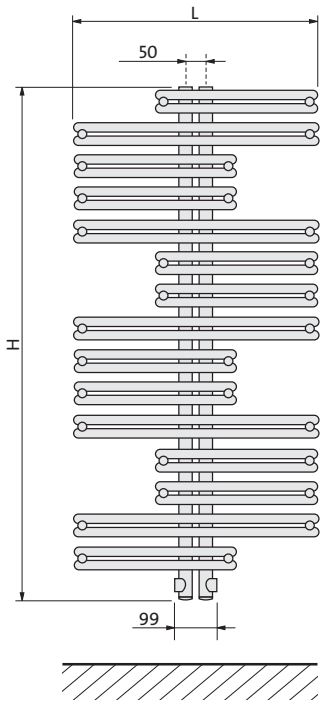

side view

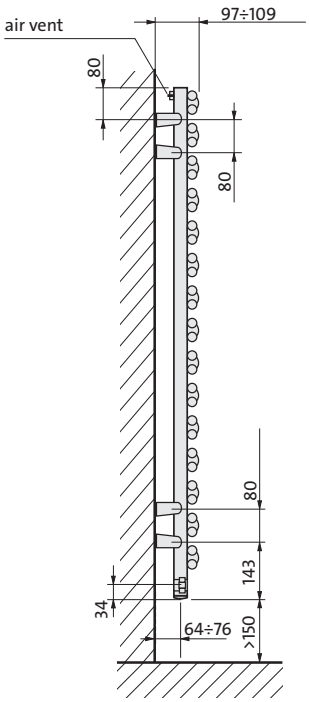

top view

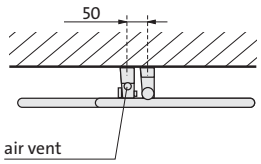

connection

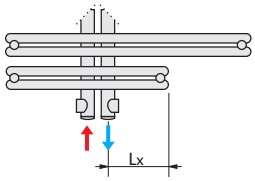

H = *height*
L = *width*

dimensions in mm

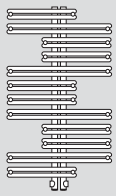

KEA 10 06

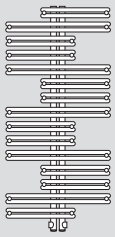

KEA 13 ..

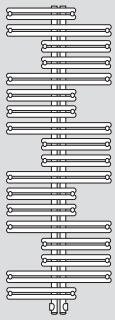

KEA 15 ..

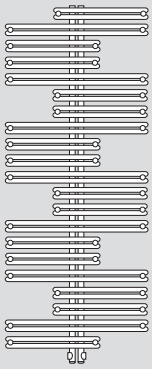

KEA 18 ..

type	output [W]		H	L	Lx	water volume	weight	number of horizontal collectors	order code
	75/65/20	55/45/20	[mm]	[mm]	[mm]	[dm³]	[kg]		
KEA 10 06	499	255	1022	600	75	4.4	10.6	2 x 12	F4IA010006000300
KEA 13 06	613	313	1262	600	75	5.3	13.3	2 x 15	F4IA013006000300
KEA 13 07	739	377	1262	750	100	5.7	15.7	2 x 15	F4IA013007500300
KEA 15 06	724	369	1502	600	75	6.1	16.0	2 x 18	F4IA015006000300
KEA 15 07	870	444	1502	750	100	6.7	18.7	2 x 18	F4IA015007500300
KEA 15 09	1030	526	1502	900	125	7.6	21.6	2 x 18	F4IA015009000300
KEA 18 07	1008	514	1742	750	100	7.7	21.7	2 x 21	F4IA018007500300
KEA 18 09	1194	609	1742	900	125	9.2	24.9	2 x 21	F4IA018009000300

Thermal output of the radiators [W] in accordance with EN 442 for parameters 75/65/20 °C and 55/45/20 °C.

RATEA

The simple yet non-standard structure of the Ratea radiator makes this model exceptionally functional. These radiators are available in both right and left side versions.

- Material : high quality steel round tubes
- Heating medium : water
- Connections : 2 threaded ½" female connections
- Working pressure : 10 bar
- Maximal temperature : 110 °C
- Painting : anaphoretic priming, final painting with the use of electrostatic powder coating
- Colours : RAL 9016 white, other colours from the RAL colour chart are available on request
- Basic equipment : brackets with adjustable wall distance, ¼" air vent.
- Additional equipment : straight chrome plated hanger, bent chrome plated hanger, glass shelf, C-type chrome plated hanger, round chrome plated towel hanger, electric heater.

RATEA

front view

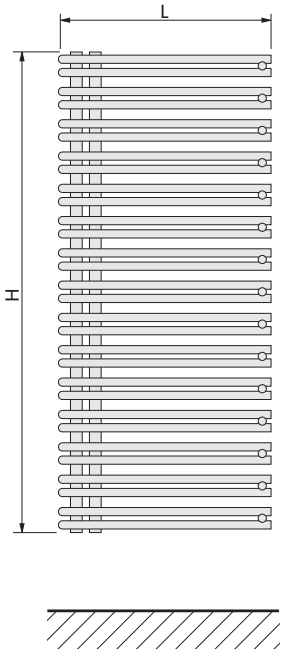

side view

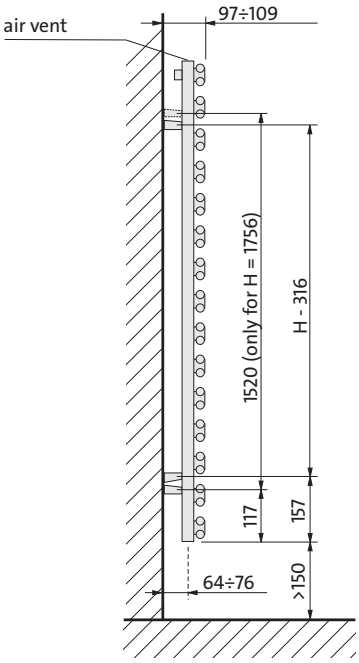

top view

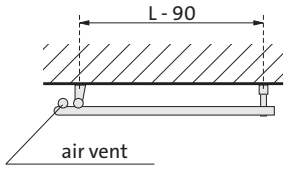

connection

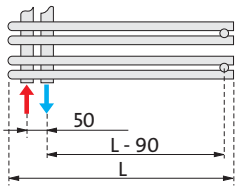

H = *height*
L = *width*

dimensions in mm

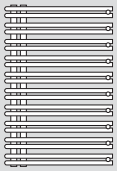

RAT 08 ..

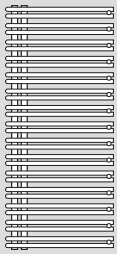

RAT 12 ..

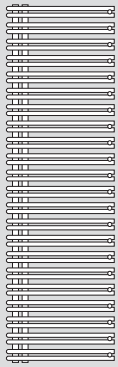

RAT 18 ..

type	output [W]		H [mm]	L [mm]	water volume [dm³]	weight [kg]	number of horizontal collectors	order code
	75/65/20	55/45/20						
RAT 08 05	446	228	796	500	3.8	8.8	2 x 10	F4BA00800500D300
RAT 08 06	530	270	796	600	4.3	10.0	2 x 10	F4BA00800600D300
RAT 08 07	653	333	796	750	5.0	11.9	2 x 10	F4BA00800750D300
RAT 12 05	650	332	1196	500	5.9	12.9	2 x 15	F4BA01200500D300
RAT 12 06	773	394	1196	600	6.7	14.8	2 x 15	F4BA01200600D300
RAT 12 07	955	487	1196	750	8.0	17.6	2 x 15	F4BA01200750D300
RAT 18 05	897	458	1756	500	8.0	19.2	2 x 22	F4BA01800500D300
RAT 18 06	1081	552	1756	600	9.5	21.8	2 x 22	F4BA01800600D300
RAT 18 07	1357	692	1756	750	11.7	25.7	2 x 22	F4BA01800750D300

Thermal output of the radiators [W] in accordance with EN 442 for parameters 75/65/20 °C and 55/45/20 °C.

IMIA

Unlike the classic bathroom radiator models, Imia has vertically oriented collectors which gives it a tall and attractive appearance.

- Material : high quality steel round tubes
- Heating medium : water
- Connections : 3 threaded ½” female connections
- Working pressure : 10 bar
- Maximal temperature : 110 °C
- Painting : anaphoretic priming, final painting with the use of electrostatic powder coating
- Colours : RAL 9016 white, other colours from the RAL colour chart are available on request

- Basic equipment : brackets with adjustable wall distance, ¼” air vent, two ¼” blanking plugs, ½” blanking plug
- Additional equipment : straight chrome plated hanger, round chrome plated hanger, clothing hanger, electric heater.

IMIA

front view

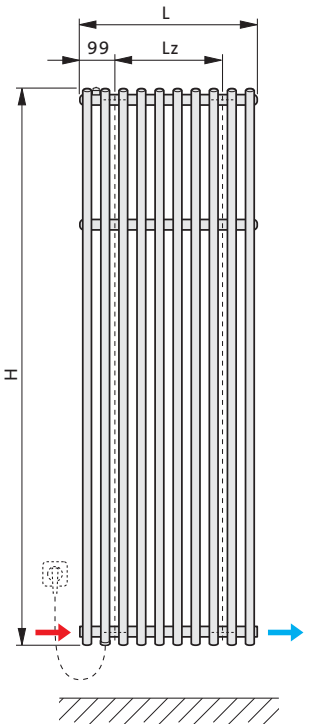

side view

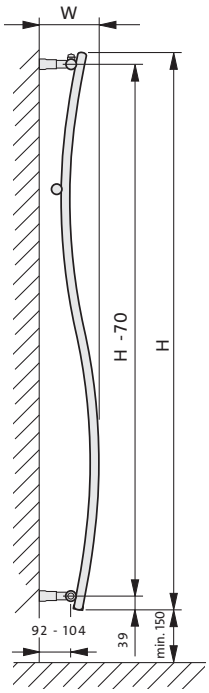

top view

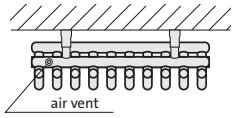

connection

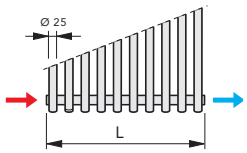

H = *height*
L = *width*
Lz = *horizontal spacing of brackets*
W = *depth*

dimensions in mm

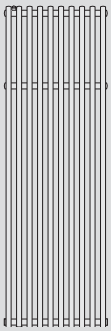

IMI 16 ..

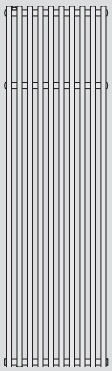

IMI 18 ..

type	output [W] 75/65/20	output [W] 55/45/20	H [mm]	L [mm]	Lz [mm]	W [mm]	water volume [dm³]	weight [kg]	order code
IMI 16 05	850	434	1600	510	312	169-181	6.5	13.5	F4VA016005000300
IMI 16 08	1359	693	1600	822	624	169-181	10.4	21.6	F4VA016008000300
IMI 16 10	1699	867	1600	1030	832	169-181	13.0	27.0	F4VA016010000300
IMI 18 05	948	484	1800	510	312	177-189	7.7	15.0	F4VA018005000300
IMI 18 08	1516	773	1800	822	624	177-189	12.3	24.0	F4VA018008000300
IMI 18 10	1895	967	1800	1030	832	177-189	15.4	30.0	F4VA018010000300
IMI 18 12	2274	1160	1800	1238	1040	177-189	18.5	35.8	F4VA018012000300

Thermal output of the radiators [W] in accordance with EN 442 for parameters 75/65/20 °C and 55/45/20 °C.

MAURITIUS

The Mauritius model can be installed in places where there is no room for a radiator on the wall. After installation, the Mauritius radiator acts as a partition wall adding to the room arrangement.

- Material : high quality steel round tubes
- Heating medium : water
- Connections : 3 threaded ½" female connections
- Working pressure : 10 bar
- Maximal temperature : 110 °C
- Painting : anaphoretic priming, final painting with the use of electrostatic powder coating
- Colours : RAL 9016 white, other colours from the RAL colour chart are available on request

- Basic equipment : brackets with adjustable wall distance, ½" air vent, two ½" blanking plugs
- Additional equipment : straight chrome plated hanger, bent chrome plated hanger, glass shelf, C-type chrome plated hanger, round chrome plated towel hanger, electric heater.

MAURITIUS

front view

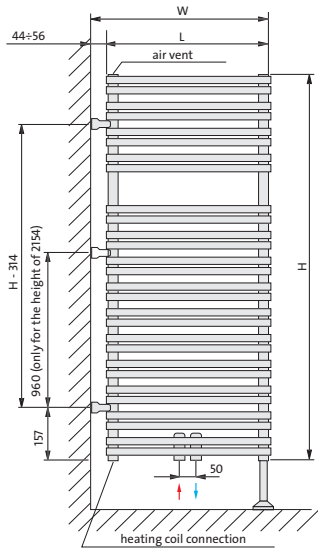

side view

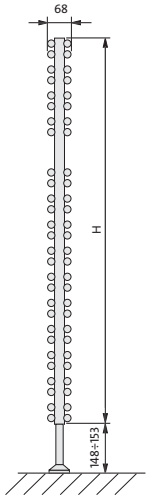

H = *height*
L = *width*
W = *depth*

dimensions in mm

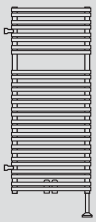

MAU 12 ..

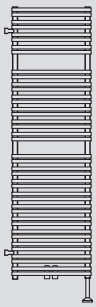

MAU 18 ..

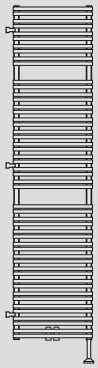

MAU 22 ..

type	output [W]		H	L	W	water volume	weight	number of horizontal collectors	order code
	75/65/20	55/45/20	[mm]	[mm]	[mm]	[dm³]	[kg]		
MAU 12 05	863	440	1194	500	544-556	9.4	20.8	56	F44A012005000300
MAU 12 06	1002	511	1194	600	644-656	11.2	24.2	56	F44A012006000300
MAU 12 07	1202	613	1194	750	794-806	14.0	29.4	56	F44A012007500300
MAU 12 09	1395	712	1194	900	944-956	16.6	34.4	56	F44A012009000300
MAU 18 05	1216	620	1754	500	544-556	14.2	28.8	80	F44A018005000300
MAU 18 06	1435	732	1754	600	644-656	16.6	34.9	80	F44A018006000300
MAU 18 07	1758	897	1754	750	794-806	20.0	42.1	80	F44A018007500300
MAU 18 09	2073	1058	1754	900	944-956	23.4	49.5	80	F44A018009000300
MAU 22 05	1445	737	2154	500	544-556	17.3	37.1	100	F44A022005000300
MAU 22 06	1724	880	2154	600	644-656	20.4	34.3	100	F44A022006000300
MAU 22 07	2145	1094	2154	750	794-806	25.1	52.2	100	F44A022007500300
MAU 22 09	2560	1306	2154	900	944-956	29.5	61.6	100	F44A022009000300

Thermal output of the radiators [W] in accordance with EN 442 for parameters 75/65/20 °C and 55/45/20 °C.

JAVA

Horizontal heating elements of the Java model have an unusual elliptic shape. Their angled positioning resembling venetian blinds gives the impression of lightness.

- Material : high quality steel profiles
- Heating medium : water
- Connections : 2 threaded ½" female connections
- Working pressure : 8 bar
- Maximal temperature : 110 °C
- Painting : anaphoretic priming, final painting with the use of electrostatic powder coating
- Colours : RAL 9016 white, other colours from the RAL colour chart are available on request

- Basic equipment : brackets with adjustable wall distance, 1/8" air vent
- Additional equipment : electric heater.

JAVA

front view

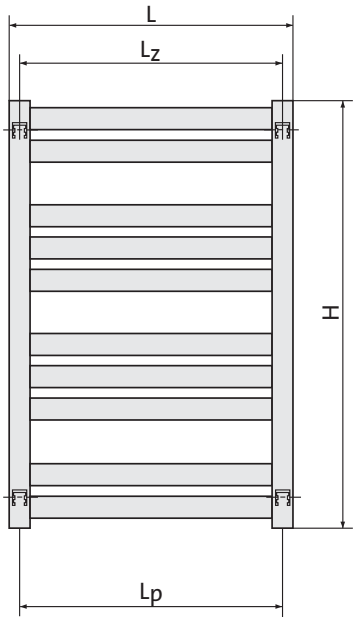

side view

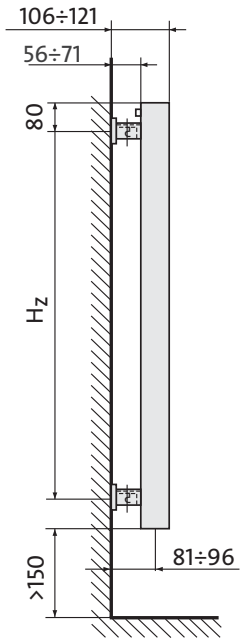

top view

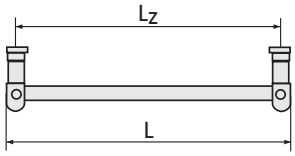

H = *height*
L = *width*
Hz = *vertical spacing of brackets*
Lz = *horizontal spacing of brackets*
Lp = *spacing of connectors*

dimensions in mm

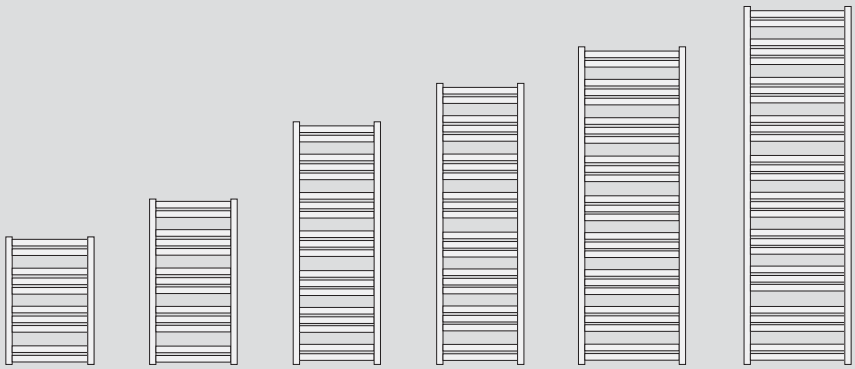

JAV 07 05 | JAV 09 .. | JAV 13 .. | JAV 15 05 | JAV 17 06 | JAV 19 06

type	output [W]		H	L	brackets		Lp	water volume	weight	number of horizontal collectors	order code
	75/65/20	55/45/20	[mm]	[mm]	Hz [mm]	Lz [mm]	[mm]	[dm³]	[kg]		
JAV 07 05	358	183	700	500	520	470	470	3.2	6.6	10	F4MA007005000320
JAV 09 04	393	201	912	400	750	370	370	3.7	7.3	13	F4MA009104000320
JAV 09 05	463	236	912	500	750	470	470	4.2	8.7	13	F4MA009105000320
JAV 13 04	568	290	1336	400	1170	370	370	5.4	10.8	19	F4MA013304000320
JAV 13 05	668	341	1336	500	1170	470	470	6.1	12.3	19	F4MA013305000320
JAV 15 05	780	398	1548	500	1320	470	470	7.0	14.3	22	F4MA015405000320
JAV 17 06	1015	518	1760	600	1600	570	570	8.9	18.9	25	F4MA017606000320
JAV 19 06	1137	580	1972	600	1790	570	570	10.0	20.9	28	F4MA019706000320

Thermal output of the radiators [W] in accordance with EN 442 for parameters 75/65/20 °C and 55/45/20 °C.

MUNA

Flat heating elements of the Muna model give it a stark appearance, making it an excellent match for a minimalist interior where an attractive detail is of particular significance.

- Material : high quality steel profiles
- Heating medium : water
- Connections : 2 threaded ½" female connections
- Working pressure : 4 bar
- Maximal temperature : 110 °C
- Painting : anaphoretic priming, final painting with the use of electrostatic powder coating
- Colours : RAL 9016 white, other colours from the RAL colour chart are available on request
- Basic equipment: brackets with adjustable wall distance, 1/8" air vent.
- Additional equipment: straight hanger, round hanger, V-type towel hanger, electric heater.

MUNA

front view

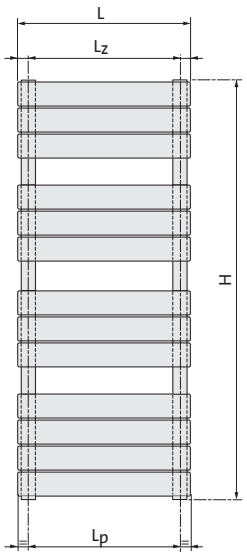

side view

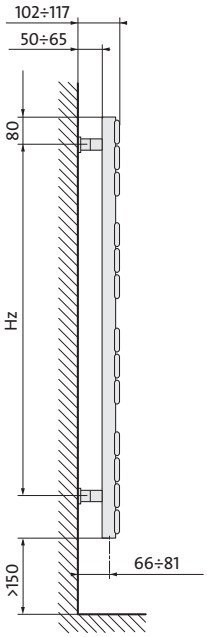

top view

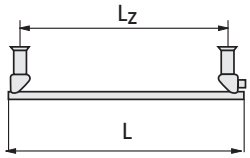

H = *height*
L = *width*
Hz = *vertical spacing of brackets*
Lz = *horizontal spacing of brackets*
Lp = *spacing of connectors*

dimensions in mm

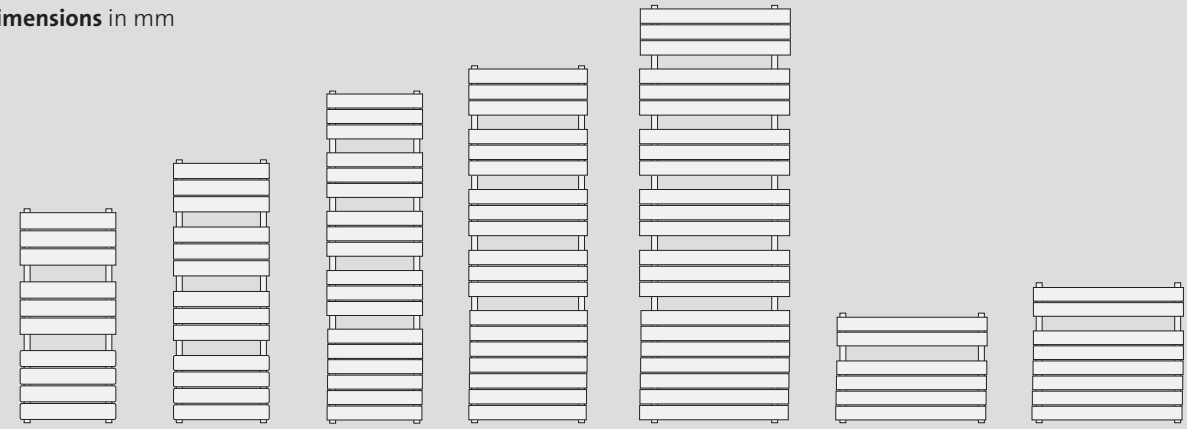

MUN 09 05 | MUN 12 05 | MUN 16 05 | MUN 17 .. | MUN 20 08 | MUN 05 08 | MUN 07 ..

type	output [W]		H	L	brackets		Lp	water volume	weight	number of horizontal collectors	order code
	75/65/20	55/45/20	[mm]	[mm]	Hz [mm]	Lz [mm]	[mm]	[dm³]	[kg]		
MUN 09 05	470	240	905	500	620	438	447	4.8	10.8	10	F8GA009005000320
MUN 12 05	602	307	1205	500	990	438	447	6.3	14.1	13	F8GA012005000320
MUN 16 05	815	416	1650	500	1460	438	447	8.6	19.4	18	F8GA016505000320
MUN 17 06	987	504	1730	600	1460	538	547	10.3	23.1	19	F8GA017306000320
MUN 17 08	1311	669	1730	800	1460	738	747	12.3	29.1	19	F8GA017308000320
MUN 20 08	1464	747	2030	800	1790	738	747	14.3	33.9	22	F8GA020308000320
MUN 05 08	400	204	530	800	330	738	747	3.8	9.6	6	F8FA005308000320
MUN 07 10	653	333	680	1000	520	938	947	6.0	16.5	8	F8FA006810000320
MUN 07 12	784	400	680	1200	520	1138	1147	7.2	21.5	8	F8FA006812000320

Thermal output of the radiators [W] in accordance with EN 442 for parameters 75/65/20 °C and 55/45/20 °C.

FLORES CH

A minimalist form radiator. Captivating with the simplicity of its shape and precision of execution. High quality chrome finishing allows for arrangement of the Flores CH radiator in both classic and modern bathrooms.

- Material : high quality steel profiles
- Heating medium : water
- Connections : 4 threaded ½" female connections
- Working pressure : 8 bar
- Maximal temperature : 110 °C
- Painting : chrome electroplating

- Basic equipment : chrome plated brackets with adjustable wall distance, ½" air vent, blanking plug
- Additional equipment : round chrome plated towel hanger, electric heater.

FLORES CH

front view

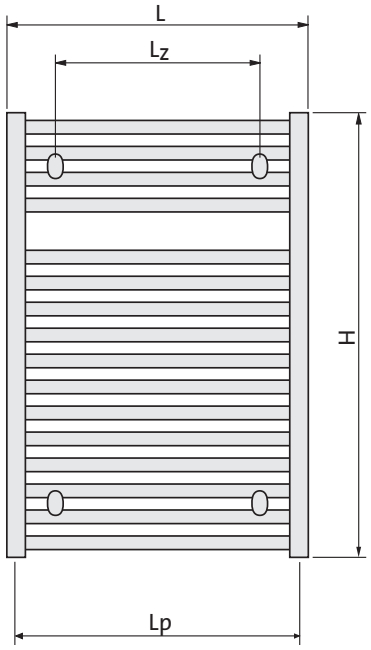

side view

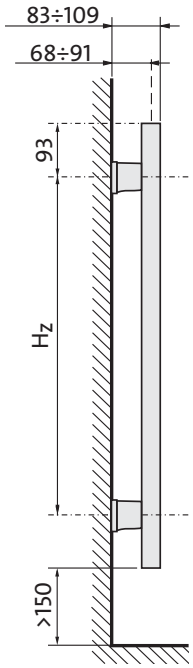

top view

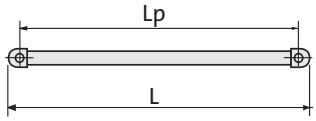

H = *height*
L = *width*
Hz = *vertical spacing of brackets*
Lz = *horizontal spacing of brackets*
Lp = *spacing of connectors*

dimensions in mm

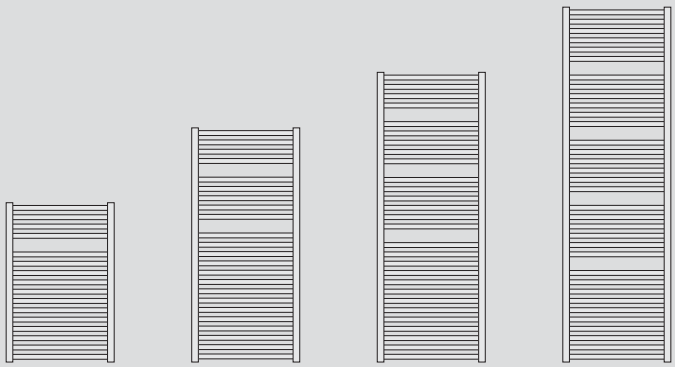

FLO 08 .. CH | FLO 12 .. CH | FLO 15 06 CH | FLO 18 06 CH

type	output [W]		H [mm]	L [mm]	brackets		Lp [mm]	water volume [dm³]	weight [kg]	number of horizontal collectors	order code
	75/65/20	55/45/20			Hz [mm]	Lz [mm]					
FLO 08 05 CH	258	134	770	500	584	350	455	3.54	7.0	16	F35A00800500030SCHRO
FLO 12 05 CH	354	186	1150	500	964	350	455	5.20	10.1	23	F35A01200500030SCHRO
FLO 08 06 CH	296	156	770	600	584	450	555	4.04	7.7	16	F35A00800600030SCHRO
FLO 12 06 CH	423	221	1150	600	964	450	555	5.92	11.3	23	F35A01200600030SCHRO
FLO 15 06 CH	508	268	1430	600	1244	450	555	7.30	14.0	28	F35A01500600030SCHRO
FLO 18 06 CH	635	337	1755	600	1569	450	555	8.84	16.9	34	F35A01800600030SCHRO

Chrome coated radiator. *Thermal output of the radiators [W] in accordance with EN 442 for parameters 75/65/20 °C and 55/45/20 °C.*

FLORES C CH

Subtle curvature of horizontal collectors makes the Flores C CH model exceptionally practical in daily use. Its versatility is highlighted by timeless chrome plating.

- Material : high quality steel profiles
- Heating medium : water
- Connections : 4 threaded ½" female connections
- Working pressure : 8 bar
- Maximal temperature : 110 °C
- Painting : chrome electroplating

- Basic equipment : chrome plated brackets with adjustable wall distance, ½" air vent, blanking plug
- Additional equipment : round chrome plated towel hanger, electric heater.

FLORES C CH

front view

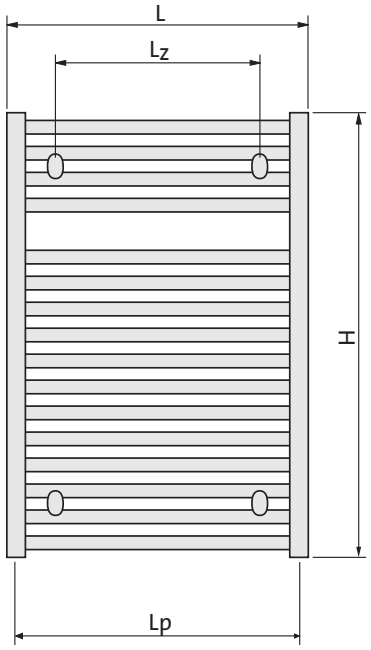

side view

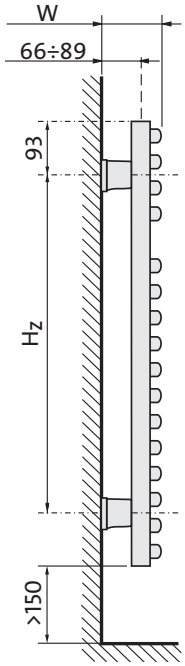

top view

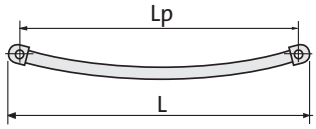

H = *height*
L = *width*
Hz = *vertical spacing of brackets*
Lz = *horizontal spacing of brackets*
Lp = *spacing of connectors*
W = *depth*

dimensions in mm

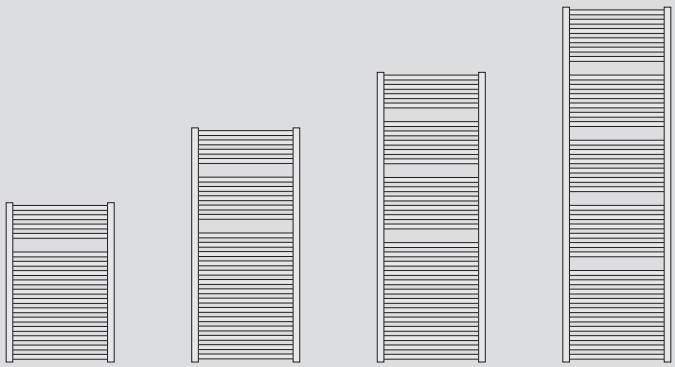

FLC 08 .. CH | FLC 12 .. CH | FLC 15 06 CH | FLC 18 06 CH

type	output [W] 75/65/20	output [W] 55/45/20	H [mm]	L [mm]	W [mm]	brackets Hz [mm]	brackets Lz [mm]	Lp [mm]	water volume [dm³]	weight [kg]	number of horizontal collectors	order code
FLC 08 05 CH	258	134	770	500	100-123	584	300	455	3.54	7.0	16	F33A00800500030SCHRO
FLC 12 05 CH	354	186	1150	500	100-123	964	300	455	5.20	10.1	23	F33A01200500030SCHRO
FLC 08 06 CH	296	156	770	600	109-132	584	400	555	4.04	7.7	16	F33A00800600030SCHRO
FLC 12 06 CH	423	221	1150	600	109-132	964	400	555	5.92	11.3	23	F33A01200600030SCHRO
FLC 15 06 CH	508	268	1430	600	109-132	1264	400	555	7.30	14.0	28	F33A01500600030SCHRO
FLC 18 06 CH	635	337	1755	600	109-132	1569	400	555	8.84	16.9	34	F33A01800600030SCHRO

Chrome coated radiator. *Thermal output of the radiators [W] in accordance with EN 442 for parameters 75/65/20 °C and 55/45/20 °C.*

ELATO

Flat heating elements located asymmetrically with respect to the vertical collectors add extravagance and, at the same time, preserve high functionality.

- Material : high quality steel profiles
- Heating medium : water
- Connections : 4 threaded ½" female connections
- Working pressure : 4 bar
- Maximal temperature : 110 °C
- Painting : anaphoretic priming, final painting with the use of electrostatic powder coating
- Colours : RAL 9016 white, other colours from the RAL colour chart are available on request

- Basic equipment : brackets with adjustable wall distance, ½" air vent and blanking plug
- Additional equipment : straight hanger, round hanger, V-type towel hanger, electric heater.

Note!

- Supply and return pipes are ALWAYS bottom-connected (can be swapped)
- The radiator is up/down reversible which allows for achieving left and right side versions.

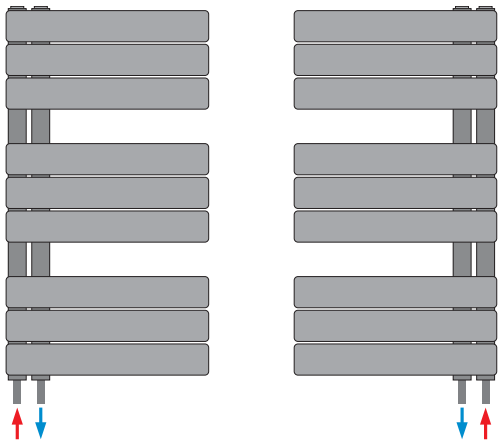

ELATO

front view

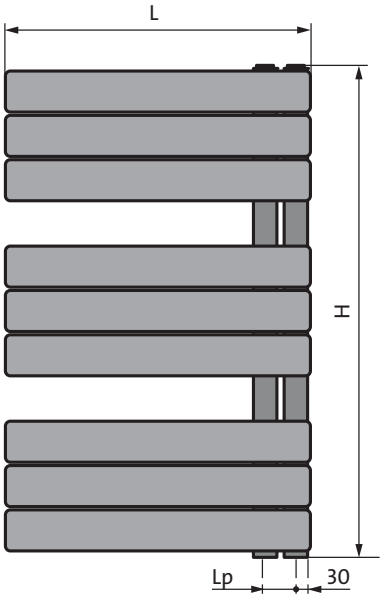

side view

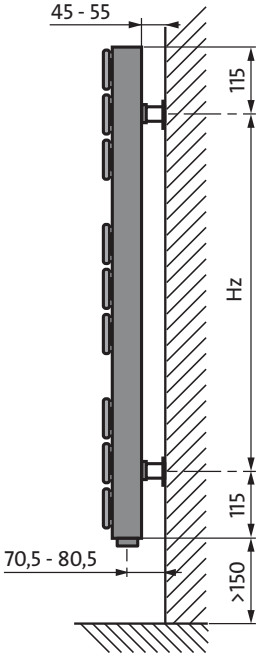

top view

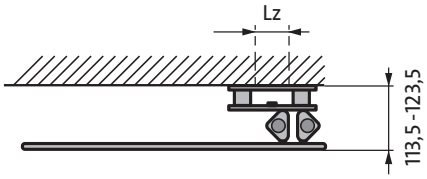

H = *height*
L = *width*
Hz = *vertical spacing of brackets*
Lz = *horizontal spacing of brackets*
Lp = *spacing of connectors*

dimensions in mm

ELA 08 04 **ELA 11 ..** **ELA 14 ..** **ELA 17 06**

type	output [W] 75/65/20	output [W] 55/45/20	H [mm]	L [mm]	brackets Hz [mm]	brackets Lz [mm]	Lp [mm]	water volume [dm³]	weight [kg]	number of horizontal collectors	order code
ELA 08 04	406	207	830	450	600	50	50	4.2	9.7	9	F8MA008304500D40
ELA 11 04	528	269	1130	450	900	50	50	5.7	13.1	12	F8MA011304500D40
ELA 11 06	706	360	1130	600	900	50	50	6.7	16.1	12	F8MA011306000D40
ELA 14 04	668	341	1430	450	1200	50	50	7.2	16.4	15	F8MA014304500D40
ELA 14 06	855	436	1430	600	1200	50	50	8.5	20.2	15	F8MA014306000D40
ELA 17 06	1008	514	1730	600	1500	50	50	10.2	24.3	18	F8MA017306000D40

Thermal output of the radiators [W] in accordance with EN 442 for parameters 75/65/20 °C and 55/45/20 °C.

APOLIMA

Original shape of arched horizontal collectors introduces an element of balance and harmony to every space.

- Material : high quality steel profiles
- Heating medium : water
- Connections : 2 threaded ½" female connections
- Working pressure : 4 bar
- Maximal temperature : 110 °C
- Painting : anaphoretic priming, final painting with the use of electrostatic powder coating
- Colours : RAL 9016 white, other colours from the RAL colour chart are available on request

- Basic equipment : brackets with adjustable wall distance, ½" air vent and blanking plug
- Additional equipment : straight hanger, round hanger, V-type towel hanger, electric heater.

Note!

- Supply and return pipes are ALWAYS bottom-connected (can be swapped).

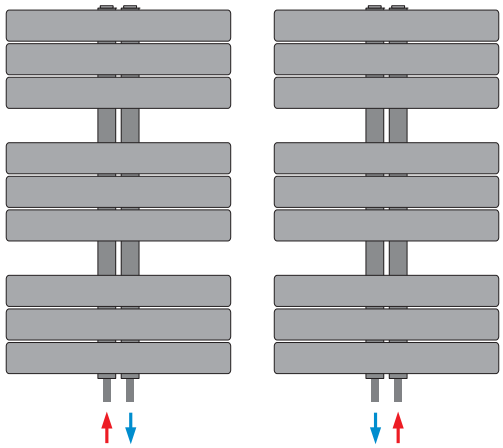

APOLIMA

front view

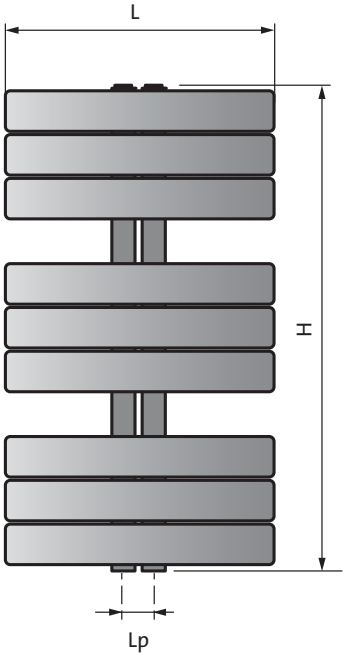

side view

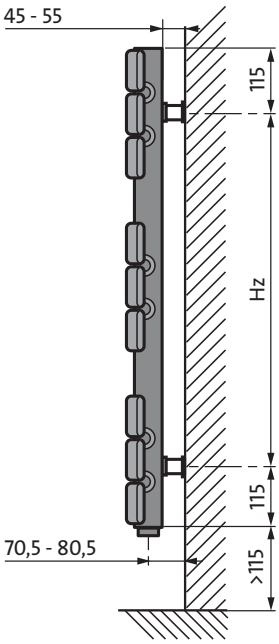

top view

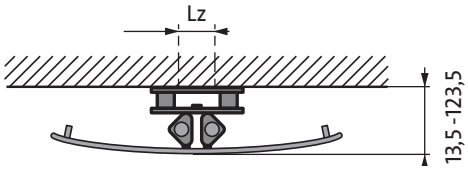

H = *height*
L = *width*
Hz = *vertical spacing of brackets*
Lz = *horizontal spacing of brackets*
Lp = *spacing of connectors*

dimensions in mm

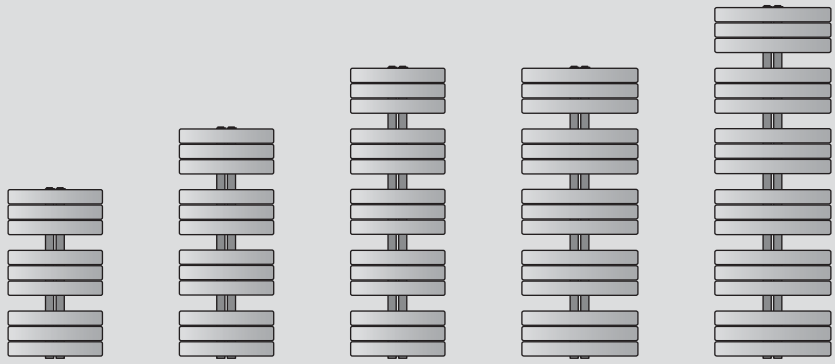

APO 08 06 | APO 11 06 | APO 14 06 | APO 14 08 | APO 17 08

type	output [W]		H	L	brackets		Lp	water volume	weight	number of horizontal collectors	order code
	75/65/20	55/45/20	[mm]	[mm]	Hz [mm]	Lz [mm]	[mm]	[dm³]	[kg]		
APO 08 06	558	285	830	650	600	50	50	5.3	12.8	9	F8JA008306500320
APO 11 06	732	373	1130	650	900	50	50	7.1	17.1	12	F8JA011306500320
APO 14 06	909	464	1430	650	1200	50	50	8.9	21.5	15	F8JA014306500320
APO 14 08	1086	554	1430	800	1200	50	50	10.2	25.3	15	F8JA014308000320
APO 17 08	1300	663	1730	800	1500	50	50	12.2	29.4	18	F8JA017308000320

Thermal output of the radiators [W] in accordance with EN 442 for parameters 75/65/20 °C and 55/45/20 °C.

APIA

Straight lines of double horizontal collectors provide high thermal output at compact dimensions.

- Material : high quality steel round profiles
- Heating medium : water
- Connections : 2 threaded ½" female connections for central bottom connection (connectors spaced at 50 mm) and 4 threaded ½" female connections for end bottom connection.
- Working pressure : 10 bar
- Maximal temperature : 110 °C
- Painting : anaphoretic priming, final painting with the use of electrostatic powder coating
- Colours : RAL 9016 white, other colours from the RAL colour chart are available on request

- Basic equipment : brackets with adjustable wall distance, ½" air vent and blanking plugs
- Additional equipment : straight hanger, round hanger, V-type towel hanger, electric heater.

APIA

front view

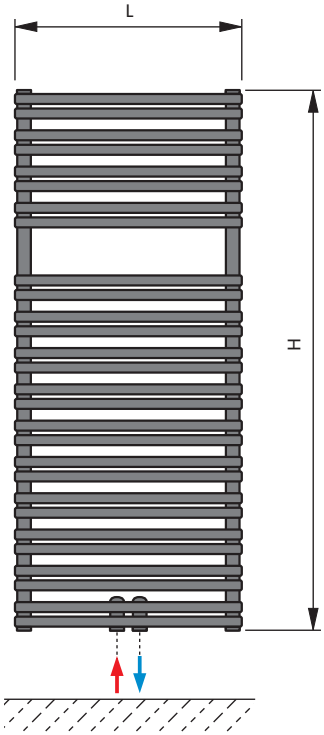

side view

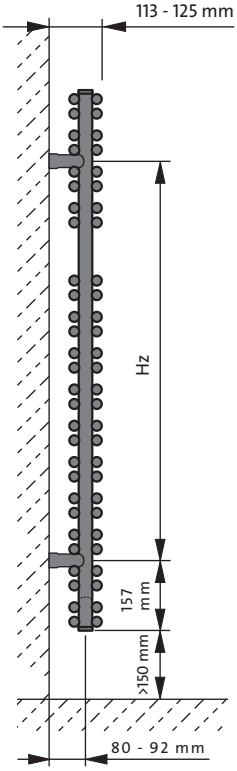

top view

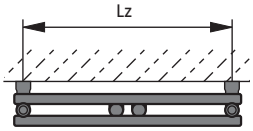

connection

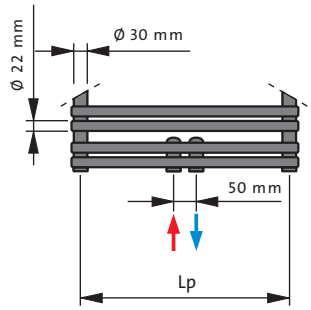

H = *height*
L = *width*
Hz = *vertical spacing of brackets*
Lz = *horizontal spacing of brackets*
Lp = *spacing of connectors*

dimensions in mm

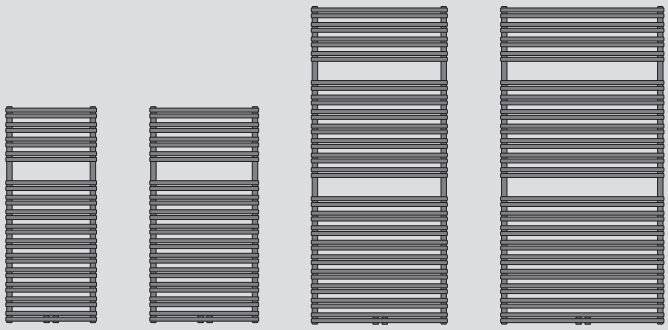

API 11 05 M API 11 06 M API 18 07 M API 18 09 M

type	output [W] 75/65/20	output [W] 55/45/20	H [mm]	L [mm]	brackets Hz [mm]	brackets Lz [mm]	Lp [mm]	water volume [dm³]	weight [kg]	number of horizontal collectors	order code
API 11 05 M	780	398	1134	500	882	460	460	7.9	18.2	48	F3VE011005000000
API 11 06 M	938	479	1134	600	882	560	560	9.3	20.7	48	F3VE011006000000
API 11 07 M	1183	604	1134	750	882	710	710	11.2	24.3	48	F3VE011007500000
API 11 09 M	1429	729	1134	900	882	860	860	13.1	28.0	48	F3VE011009000000
API 18 05 M	1243	634	1764	500	1512	460	460	13.1	27.7	72	F3VE018005000000
API 18 06 M	1474	752	1764	600	1512	560	560	14.9	31.9	72	F3VE018006000000
API 18 07 M	1794	915	1764	750	1512	710	710	17.3	38.0	72	F3VE018007500000
API 18 09 M	2127	1085	1764	900	1512	860	860	19.8	44.1	72	F3VE018009000000

Thermal output of the radiators [W] in accordance with EN 442 for parameters 75/65/20 °C and 55/45/20 °C.

LEROS

The Leros bathroom radiator impresses with its modern styling of a traditional product, the well thought out design inspires confi dence to the latest model in the Radson range. The large diameter of the tubes (28mm) provide a solid and stylish appearance. The larger gaps not only provide for a striking design but give a practical solution to placing towels and cleaning the radiator.

- Material : high quality steel round profiles
- Heating medium : water
- Connections : 2 threaded ½" female connections for central bottom connection (connectors spaced at 50 mm) and 4 threaded ½" female connections for end bottom connection.
- Working pressure : 10 bar
- Maximal temperature : 110 °C

- Painting : anaphoretic priming, final painting with the use of electrostatic powder coating
- Colours : RAL 9016 white, other colours from the RAL colour chart are available on request
- Basic equipment : brackets with adjustable wall distance, ½" air vent and blanking plugs

LEROS

front view

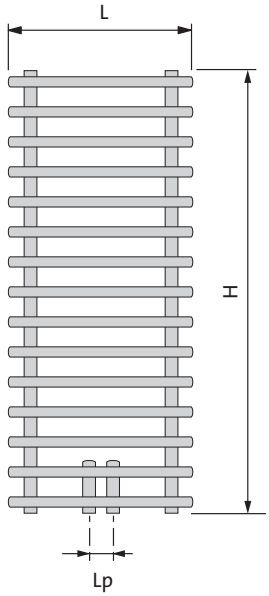

side view

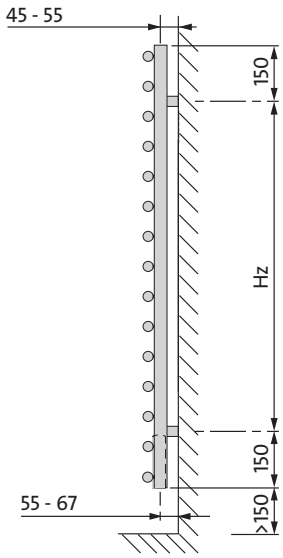

top view

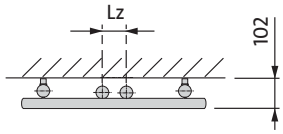

H = *height*
L = *width*
Hz = *vertical spacing of brackets*
Lz = *horizontal spacing of brackets*
Lp = *spacing of connectors*

dimensions in mm

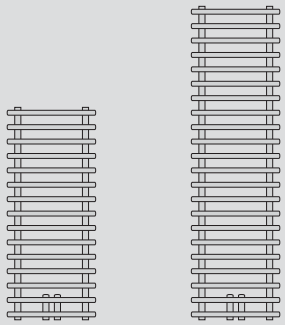

LER 12 06 M **LER 18 06 M**

type	output [W]		H	L	brackets		Lp	water volume	weight	number of horizontal collectors	order code
	75/65/20	55/45/20	[mm]	[mm]	Hz [mm]	Lz [mm]	[mm]	[dm³]	[kg]		
LER 12 06 M	607	325	1224	600	924	500	50	5.85	11.55	15	F5YA012006000300
LER 18 06 M	870	464	1812	600	1512	500	50	8.25	16.45	22	F5YA018006000300

Thermal output of the radiators [W] in accordance with EN 442 for parameters 75/65/20 °C and 55/45/20 °C.

EVIA

A bathroom radiator that combines elegant design with excellent performance. A special property of this solution is that a part of the ladder elements can be tilted so as to facilitate hanging towels and other bathroom accessories.
As a standard, the colour of the collectors is the same as the colour of the radiator. As an option, one of several ready sets of colours can be chosen, where the colour of moving elements is different than the colour of the remaining part of the radiator.

- Material : high quality steel round profiles
- Heating medium : water
- Connections : 2 threaded ½" female connections
- Working pressure : 4 bary
- Maximal temperature : 110 °C
- Painting : anaphoretic priming, final painting with the use of electrostatic powder coating
- Colours : RAL 9016 white, other colours from the RAL colour chart are available on request
- Basic equipment : Basic equipment: brackets with adjustable distance from the wall, tilted horizontal collectors used as hangers, a plug, and a 1/2" air vent.

EVIA

front view

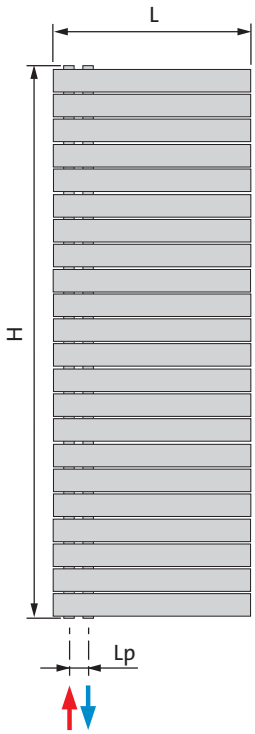

side view

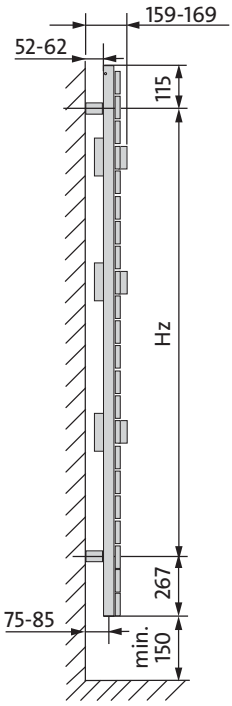

top view

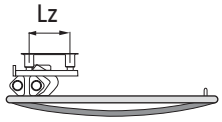

H = *height*
L = *width*
Hz = *vertical spacing of brackets*
Lz = *horizontal spacing of brackets*
Lp = *spacing of connectors*

dimensions in mm

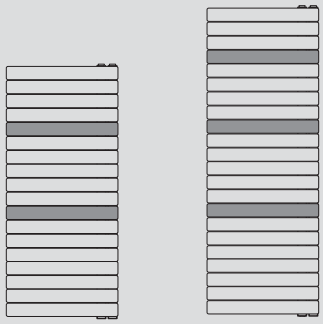

EVI 14 06 **EVI 17 06**

type	output [W] 75/65/20 °C	output [W] 55/45/20 °C	H [mm]	L [mm]	brackets Hz [mm]	brackets Lz [mm]	Lp [mm]	water volume [dm³]	weight [kg]	number of horizontal collectors	order code (left-side version)
EVI 14 06	758	398	1357	600	975	100	50	8.45	27.8	18	F96A0135060G0340
EVI 17 06	896	469	1657	600	1275	100	50	10.02	36.6	22	F96A0165060G0340
											(right-side version)
EVI 14 06	758	398	1357	600	975	100	50	8.45	27.8	18	F96A0135060D0340
EVI 17 06	896	469	1657	600	1275	100	50	10.02	36.6	22	F96A0165060D0340

Thermal output of the radiators [W] in accordance with EN 442 for parameters 75/65/20 °C and 55/45/20 °C.

Accessories

	description	dimensions, colours, outputs	order code
	straight chrome plated hanger		
	Kea, Ratea, Mauritius	492 mm	AZ1CR049C100100SCHRO
	Imia	492 mm	AZ1CR049C300100SCHRO
	Kea, Ratea (width 600, 750), Mauritius (width 600, 750, 900)	596 mm	AZ1CR060C100100SCHRO
	Imia (width 822, 1030, 1238)	596 mm	AZ1CR060C300100SCHRO
	Kea (width 750, 900), Mauritius (width 900)	804 mm	AZ1CR080C100100SCHRO
	Imia (width 822, 1030, 1238)	804 mm	AZ1CR080C300100SCHRO
	Imia (width 1030, 1238)	1012 mm	AZ1CR101C300100SCHRO
	bent chrome plated hanger		
	Kea, Ratea, Mauritius	500 mm	AZ1BT050C100100SCHRO
	Kea (width 750, 900), Ratea (width 750), Mauritius (width 750, 900)	650 mm	AZ1BT065C100100SCHRO
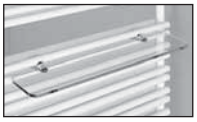	**glass shelf**		
	Kea, Ratea, Mauritius	300 mm	AZ1GS030C100100SCHRO
	Kea, Ratea, Mauritius	500 mm	AZ1GS050C100100SCHRO
	Kea (width 750, 900), Ratea (width 750), Mauritius (width 750, 900)	650 mm	AZ1GS065C100100SCHRO
	C-type chrome plated hanger		
	Kea, Ratea, Mauritius		AZ1HT000C100100SCHRO
	Santorini		AZ1HT000C200100SCHRO
	round chrome plated towel hanger		
	Kea, Ratea, Mauritius		AZ1TR000C100100SCHRO
	Santorini, Santorini C		AZ1TR000C200100SCHRO
	Imia		AZ1TR000C300100SCHRO
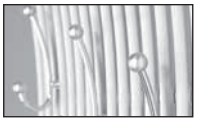	**clothing hanger**		
	Imia		AZ1BH000C000100SCHRO
	straight hanger		
	Muna	white	AZ16BTBARP40BL00
		chrome plated	AZ16BTBARP400CHSCHRO
	round hanger		
	Muna	white	AZ16HTANOPBL0000
		chrome plated	AZ16HTANOPCH000SCHRO
	V-type towel hanger - 2 pcs		
	Muna	white	AZ16BTPATVPBL000
		chrome plated	AZ16BTPATVPCH00SCHRO

Hydraulic characteristics

Pressure loss diagram for the radiators Narbonne VT and Narbonne V VT with Danfoss valve inserts

Initial preset value

Base:

supply temperature	**70 °C**
return temperature	**55 °C**
room temperature	**20 °C**

initial preset **1** for the radiators up to	k_v = 0.13 approx. 500 W
initial preset **2** for the radiators up to	k_v = 0.21 approx. 800 W
initial preset **3** for the radiators up to	k_v = 0.26 approx. 1000 W
initial preset **4** for the radiators up to	k_v = 0.31 approx. 1200 W
initial preset **5** for the radiators up to	k_v = 0.41 approx. 1600 W
initial preset **6** for the radiators up to	k_v = 0.52 approx. 2000 W
initial preset **7** for the radiators up to	k_v = 0.63 approx. 2400 W
initial preset **N** for the radiators from	k_v = 0.75 2400 W

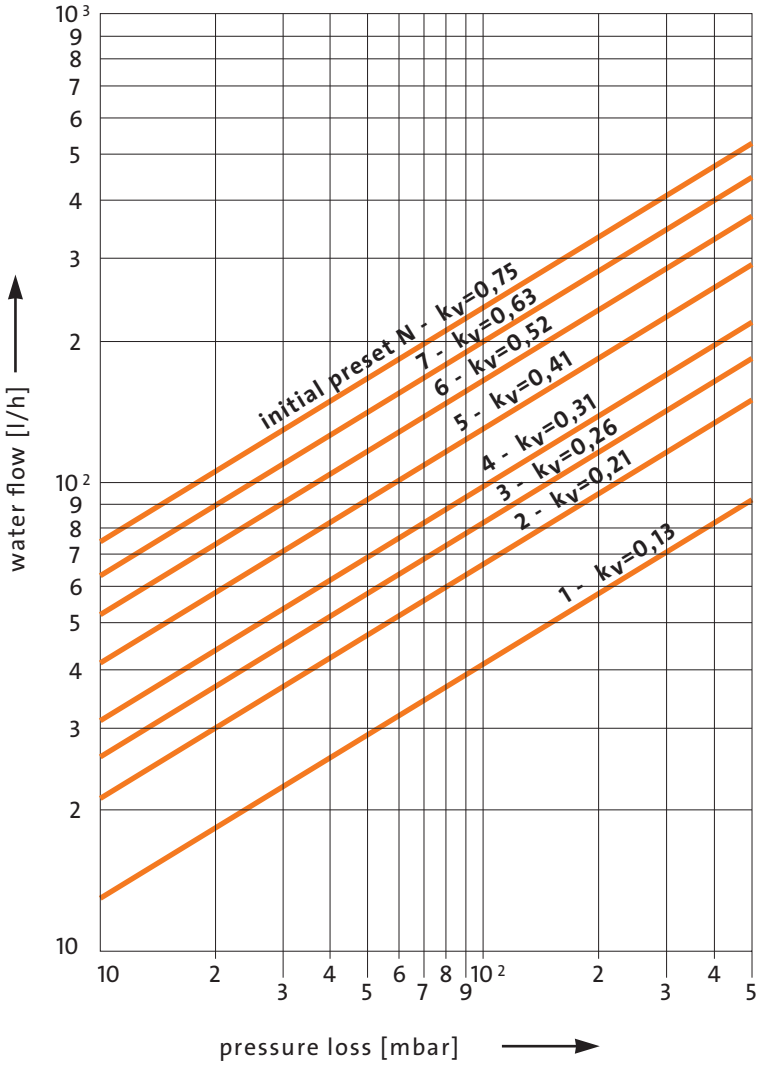

1 mbar = 100 Pa = 0,1 kPa

Pressure loss [mbar] – double-pipe system with proportional band 2K.

Corrections of the valve initial presets can also be entered in operating conditions (under working pressure).

Correction factors

heating medium temperature [°C]		value of the factor for selecting the heat output of the radiator at temperatures other than 75/65/20 °C							
		t_i air temperature in the heated room [°C]							
t_s	t_r	5	8	12	16	18	20	22	24
95	90	0.48	0.50	0.54	0.57	0.59	0.61	0.64	0.66
	85	0.50	0.52	0.56	0.60	0.62	0.64	0.67	0.70
	80	0.52	0.55	0.59	0.63	0.65	0.68	0.70	0.73
	75	0.54	0.57	0.61	0.66	0.69	0.72	0.75	0.78
	70	0.57	0.60	0.65	0.70	0.73	0.76	0.79	0.83
90	85	0.52	0.55	0.58	0.63	0.65	0.67	0.70	0.73
	80	0.54	0.57	0.61	0.66	0.68	0.71	0.74	0.77
	75	0.57	0.60	0.64	0.69	0.72	0.75	0.78	0.82
	70	0.59	0.63	0.67	0.73	0.76	0.80	0.83	0.87
	65	0.62	0.66	0.71	0.77	0.81	0.85	0.89	0.93
85	80	0.56	0.59	0.64	0.69	0.72	0.75	0.78	0.81
	75	0.59	0.62	0.67	0.72	0.75	0.79	0.82	0.86
	70	0.62	0.65	0.70	0.77	0.80	0.84	0.88	0.92
	65	0.65	0.69	0.75	0.81	0.85	0.89	0.94	0.99
	60	0.68	0.73	0.79	0.87	0.91	0.96	1.01	1.07
80	75	0.61	0.65	0.70	0.76	0.79	0.83	0.87	0.91
	70	0.64	0.68	0.74	0.81	0.84	0.88	0.93	0.97
	65	0.68	0.72	0.78	0.86	0.90	0.94	0.99	1.05
	60	0.72	0.76	0.83	0.91	0.96	1.01	1.07	1.13
	55	0.76	0.81	0.89	0.98	1.04	1.10	1.16	1.24
75	70	0.67	0.72	0.78	0.85	0.89	0.94	0.98	1.04
	65	0.71	0.75	0.82	0.90	0.95	1.00	1.05	1.12
	60	0.75	0.80	0.88	0.97	1.02	1.08	1.14	1.21
	55	0.80	0.85	0.94	1.04	1.10	1.17	1.24	1.32
	50	0.85	0.91	1.01	1.13	1.20	1.28	1.37	1.47
70	65	0.75	0.79	0.87	0.96	1.01	1.07	1.13	1.19
	60	0.79	0.84	0.93	1.03	1.08	1.15	1.22	1.30
	55	0.84	0.90	0.99	1.11	1.17	1.25	1.33	1.42
	50	0.89	0.96	1.07	1.20	1.28	1.37	1.47	1.58
65	60	0.83	0.89	0.98	1.10	1.16	1.23	1.31	1.40
	55	0.88	0.95	1.05	1.18	1.26	1.34	1.43	1.54
	50	0.94	1.02	1.14	1.29	1.37	1.47	1.59	1.71
60	55	0.94	1.01	1.13	1.27	1.36	1.45	1.56	1.68
	50	1.00	1.08	1.22	1.39	1.48	1.60	1.73	1.87
	45	1.08	1.17	1.33	1.53	1.65	1.78	1.94	2.13
55	50	1.07	1.16	1.31	1.50	1.62	1.75	1.90	2.07
	45	1.15	1.26	1.43	1.66	1.80	1.96	2.15	2.37
	40	1.25	1.37	1.59	1.86	2.03	2.24	2.48	2.78
50	45	1.23	1.36	1.56	1.82	1.98	2.17	2.40	2.67
	40	1.34	1.48	1.73	2.05	2.25	2.50	2.79	3.15
	35	1.47	1.65	1.94	2.36	2.63	2.96	3.38	3.92
45	40	1.45	1.62	1.90	2.28	2.53	2.83	3.19	3.66
	35	1.60	1.80	2.15	2.64	2.96	3.37	3.89	4.58
40	35	1.75	1.98	2.40	3.00	3.41	3.93	4.62	5.54
	30	1.96	2.25	2.79	3.61	4.21	5.01	6.14	7.87

The table has been prepared for n = 1.3

example:

The calculated room heat demand is 800 W. For the supply water the designed temperature is 55 °C, and for the return water it is 45°C. The designed air temperature in the room is 20 °C. For the values of parameters 55/45/20 °C, the correction factor value of 1.96 is red off.

As a result of multiplying heat demand (800 W) by the correction factor (1.96), the value of heat output (800 W) by the correction factor (1.96), the value of heat output is found (1568 W). This value is used for selection of the radiator for the values of parameters 75/65/20 °C.

Purmo colour palette

STANDARD COLOUR

RAL 9016 Traffic white

All prices presented in this brochure refer to products painted in a standard colour RAL 9016. Other RAL and special colours are available on request.

Surcharges for other RAL and special colours from the palette presented below:

+ 20 % - decorative, bathroom radiators

Surcharges for other RAL and special colours out of the palette presented below:

+ 50 % - decorative, bathroom radiators

RAL COLOURS

RAL 1004 Golden yellow	RAL 1012 Lemon yellow	RAL 1023 Traffic yellow	RAL 1027 Curry yellow	RAL 1033 Dahlia yellow	RAL 2003 Pastel orange	RAL 2004 Pure orange	RAL 3000 Flame red
RAL 3005 Wine red	RAL 3014 Antique pink	RAL 3015 Light pink	RAL 4002 Red violet	RAL 4007 Purple violet	RAL 4008 Signal violet	RAL 4009 Pastel violet	RAL 5001 Green blue
RAL 5002 Ultramarine blue	RAL 5009 Azure blue	RAL 5014 Pigeon blue	RAL 5015 Sky blue	RAL 5017 Traffic blue	RAL 5022 Night blue	RAL 6004 Blue green	RAL 6019 Pastel green
RAL 6033 Mint turquoise	RAL 6034 Pastel turquoise	RAL 7001 Silver grey	RAL 7013 Brown grey	RAL 7015 Slate grey	RAL 7016 Anthracite grey	RAL 7021 Black grey	RAL 7024 Graphite grey
RAL 7030 Stone grey	RAL 7035 Light grey	RAL 7037 Dusty grey	RAL 7040 Window grey	RAL 8017 Chocolate brown	RAL 8019 Grey brown	RAL 9001 Cream	RAL 9005 Jet black
RAL 9006 White aluminium	RAL 9007 Grey aluminium	RAL 9010 Pure White	RAL 040 80 05 Caffé Latte (S0222)	RAL 120 70 70 E-Green (S0221)	RAL 120 80 60 Modern green (S0220)	RAL 150 60 60 Green Apple (S0219)	RAL 250-2 Lemon Glow (S0182)
RAL 290 40 45 Mystic Purple (S0185)	RAL 290 70 20 Mauve Haze (S0178)						

SPECIAL COLOURS

S0075 Jasmine	S0077 Magnolia	S0084 Anemone	S0087 Bahama beige	S0088 Manhatten	S0091 Pergamon	S0094 Natura	S0164 Banana
S0102 Metal Grey [2]	S0104 Metal Black [2]	S0141 Black Textured [1]	S0142 White Textured [1]	S0143 Light Grey	S0144 Brown Grey	S0145 Creme White	S0146 Anodic Bronze
S0147 Anodic Brown	S0148 Anodic Black	S0149 Anodic Natura	S0201 Metal Alu [2]				

[1] textured colour
[2] metallic colour

Colours presented here should be considered as demonstrative. Before purchase, the colours should be selected based on the original colour chart only. The manufacturer is not responsible for the selection of colours based on materials printed or displayed on a computer display.

NOTE!!! Different types of radiators can have different shades of the same colour.

No part of this document may be reproduced without the express written consent of Rettig ICC.
Rettig ICC accepts no responsibility for any inaccuracies or consequences arising from the use or misuse of the information contained here in.

Rettig Radiators SIA
Maskavas iela 418b, Rīga, LV-1063
Tel: +371 67808110
e-pasts: info@purmo.lv
www.purmo.com/lv/

tech_catalogue_DBR_03_2019_EN_LV

°CLEVER
LOW TEMPERATURE RADIATORS

PURMO
clever heating solutions