Ductile Iron Pipe Research Association
Archiving 2015

BREAK

File Name: CIPRA Handbook 1967 (Third Edition)

10072

BREAK

Box 3
CODE 128
Ductile Iron Pipe Research.lab
Century Document Imaging

KEEP UP TO DATE Return this Card!

You have at your fingertips a modern and complete source of information on the engineering and installation of water and sewer line systems. Be sure this Cast Iron Pipe Handbook is registered in your name so you will receive future technical material.

Simply fill in the card now and return; no postage required. Your Handbook will be registered in your name and all new material will be released to you. It is a service we are happy to provide.

Please remember to advise us if you have a future change of address.

CAST IRON PIPE RESEARCH ASSOCIATION

First-Class
Permit Number
50613
Chicago, Illinois

BUSINESS REPLY MAIL

No postage stamp necessary if mailed in the United States

Postage Will Be Paid By

CAST IRON PIPE RESEARCH ASSOCIATION
3440 Prudential Plaza,
Chicago, Illinois 60601

Handbook Service Department

CAST IRON PIPE RESEARCH ASSOCIATION

Please register my name to receive future technical material for my Cast Iron Pipe Handbook (3rd Edn.).

NAME

TITLE

COMPANY OR EMPLOYER

ADDRESS

CITY STATE ZIP CODE

Please mark all functions which you perform as part of your job:

- ☐ water line system engineering
- ☐ sewer line system engineering
- ☐ engineering management
- ☐ engineering librarian
- ☐ research and development
- ☐ manufacturer

3RD EDITION

HANDBOOK OF CAST IRON PIPE

for Water, Gas, Sewerage and Industrial Service

CAST IRON PIPE RESEARCH ASSOCIATION
CHICAGO, ILLINOIS 60601

Copyright 1967, CAST IRON PIPE RESEARCH ASSOCIATION

One of America's oldest cast iron gas mains, laid in Baltimore in 1834

PREFACE

This Third Edition of the "Handbook of Cast Iron Pipe" is presented in a new form for your convenience. Special ring binders accommodate the all-new sections relating to the manufacture and qualities of cast iron pipe and the design and installation of cast iron piping systems, as well as other important information.

This new binding method permits the presentation of standards in original printed form and arranged with identification tabs for easy reference and use. We know you will like working with these standards in this handy form.

Also, because of rapid developments taking place in the cast iron and ductile iron pipe industry, the ring binder enables us to provide you with vital new material to be included in your Handbook as it becomes available.

It is hoped that this Third Edition will be as valuable and useful as earlier editions of this guidebook which has seen over 40,000 copies distributed.

Indeed, the "Handbook of Cast Iron Pipe" has become the standard of the industry for its complete, single-source reference of necessary pipe information.

Cast Iron Pipe Research Association

One of America's oldest cast iron water mains, laid in Philadelphia in 1821

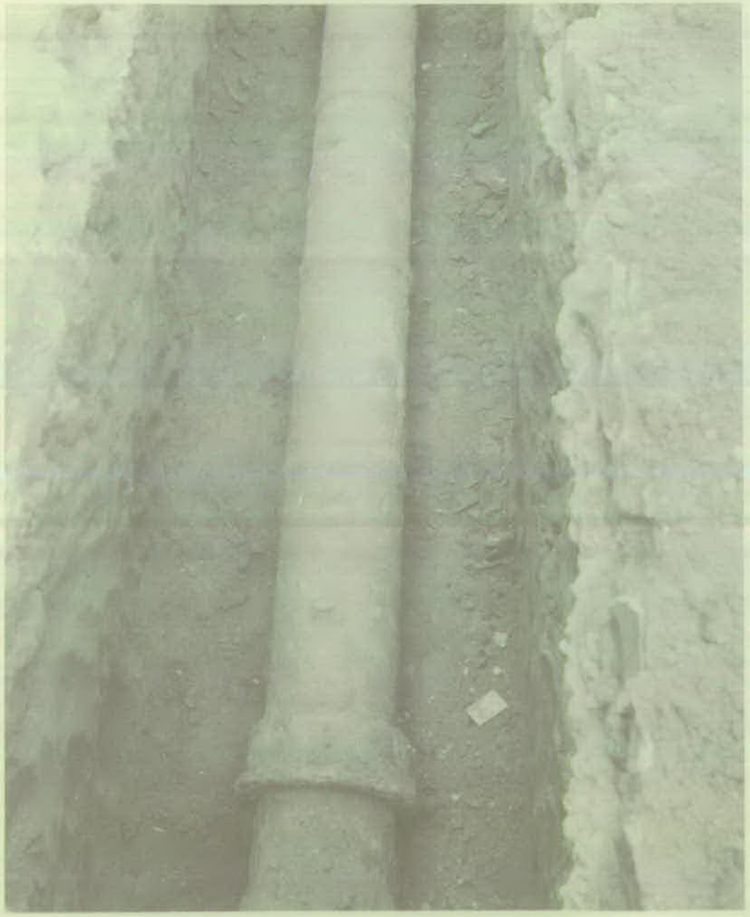

TABLE OF CONTENTS

For detailed index, see pages following Section 10

EVOLUTION AND HISTORY OF CAST IRON PIPE.....SECTION 1
FLOW OF WATER IN CAST IRON PIPE .....SECTION 2
DESIGN AND INSTALLATION OF CAST IRON PIPE....SECTION 3
FACTORS AFFECTING CORROSION OF PIPELINES.....SECTION 4
CAST IRON PIPING SYSTEMS .....SECTION 5
STANDARDS .....SECTION 6
FLANGED PIPE.....SECTION 7
SPECIAL TYPES OF PIPE AND FITTINGS .....SECTION 8
SALVAGING AND RE-USING CAST IRON PIPE .....SECTION 9
USEFUL TABLES.....SECTION 10

SECTION 1

EVOLUTION AND HISTORY OF CAST IRON PIPE

EVOLUTION AND HISTORY OF CAST IRON PIPE

EARLY USES OF CAST IRON AS PIPE

Man's ability to cast pipe probably developed from or coincidentally with the manufacture of cannons, which is reported as early as the year 1313. There is an official record of cast iron pipe manufactured at Siegerland, Germany, in 1455 for installation at the Dillenburg Castle.

A REVOLUTIONARY EXPERIMENT

In the year 1664, King Louis XIV of France ordered the construction of a cast iron pipe main extending fifteen miles from a pumping station at Marly-on-Seine to Versailles to supply water for the fountains and town. This was the first authenticated installation of cast iron pipe for the purpose and is still functioning after more than 300 years of continuous service. When the line was begun (1664), the production of iron required the use of expensive charcoal for the reduction of the iron ore; however, by 1738 success had been achieved in the production of lower cost iron through the use of coke instead of charcoal. Immediately thereafter, the more progressive cities installed cast iron mains.

INVENTION OF BELL & SPIGOT JOINT

The joints of these early cast iron lines were of the flanged type, with lead gaskets. These joints were used until Sir Thomas Simpson, engineer of the Chelsea Water Company, London, invented the bell and spigot joint in 1785. This joint was used extensively until recent years. Many of the original bell and spigot lines are still in use and apparently will serve for many more years.

EXTENSIVE USE OF CAST IRON PIPE

There are more than 130 water and gas utilities in the United States that have cast iron distribution mains with continuous service records of more than 100 years.

Since the introduction of cast iron in this country, shortly after 1816, various other materials have been offered as suitable for water distribution mains. That none of these has proved able to supplant cast iron in the confidence and preference of water works engineers is demonstrated by a recent survey of the kinds of pipe in service in water distribution systems of the 100 largest cities. This survey revealed that cast iron pipe represented more than 90% of the pipe in service in these 100 cities.

Because of such strong evidence and the cumulative experience of generations of water works engineers, cast iron pipe remains more firmly entrenched than ever in its acknowledged position as the standard material for water distribution mains.

DEVELOPMENT OF JOINTS

Flanged. Originally, cast iron pipe was made with flanged joints, using lead gaskets. Much improved joints of this type are still used for many above-ground plant installations using rubber, fiber, metal or other types of gaskets.

Bell and Spigot. The bell and spigot joint was developed in 1785 and was extensively used for new installations until the 1950's.

Mechanical Joint. The mechanical joint was developed for gas industry use in the late 1920's, but has since been used extensively in the water industry. This joint utilizes the basic principle of the stuffing box.

Roll-on-Joint. The roll-on joint was developed in 1937 and was in use approximately 20 years. The assembly of the joint involved a compressed rubber gasket, rolled under a restriction ring, followed by calked square-braided jute, with the remainder of the joint packed with a bituminous compound.

Properties. Ferritic ductile iron as compared to gray cast iron, will have about twice the strength as determined by tensile test, beam test, ring bending test, and bursting test. The tensile elongation and impact strength of ductile iron are many times that of gray cast iron.

Acceptance Test Requirements. The acceptance test requirements of the ASA-A21.51 and ASA-A21.52 Ductile Iron Pipe Standards are:

1.) Tensile properties on specimens machined from the pipe wall: ultimate strength, 60,000 psi minimum; yield strength, 42,000 psi minimum; elongation, 10% minimum.

2.) Charpy V-notch impact strengths on specimens cut from the pipe wall: 7 ft-lb minimum at 70°F; 3 ft-lb minimum at −40°F.

Quality Control. In addition to the acceptance tests, the manufacturers conduct extensive quality control tests to assure quality castings having the desired combination of properties.

A great deal of corrosion testing of ductile iron has been made since its commercial introduction. It has been found generally that the soil corrosion resistance of ductile iron pipe is equal to or somewhat better than that of gray cast iron pipe.

MANUFACTURE OF FITTINGS

Tees, crosses, bends, and other pipe fittings are irregular in shape, and the static casting method is used rather than the centrifugal method used for casting pipe. This applies to both gray iron and ductile iron fittings.

Preparatory to pouring iron, molds forming the outside contours of the fittings are assembled with cores that form the openings through the fittings. Iron is then poured into the mold assembly and flows into the void surrounding the core.

After the fittings have cooled, they are removed from the mold, cleaned, inspected, gaged for dimensional accuracy, weighed, lined and coated, as required.

Chemistry. CARBON: Carbon in cast iron pipe may vary from about 3.00% to 3.75%. In general, the carbon content is adjusted to suit the particular method of manufacture and the cooling rate of a given size of casting.

SILICON: Silicon promotes graphitization, and, therefore, is a very useful element to control the properties of gray cast iron. The proper use of silicon permits a wide range of different castings to be made with uniform strength and hardness properties.

PHOSPHORUS: Phosphorus in cast iron pipe ranges up to a maximum of 0.90%. Phosphorus increases the fluidity of the molten iron and is useful for wear and corrosion resistance.

MANGANESE AND SULFUR: Manganese content is related to the content of sulfur and other elements in the control of physical properties. Sulfur is limited to 0.12% maximum in the current pipe standards.

Several other elements may be present and affect the physical properties. For this reason, the acceptance test requirements of cast iron pipe standards are based on the physical properties.

Quality Control. Modern metallurgical control enables the foundry to produce quality castings with the desired combination of properties. Tests carried out as a guide to metallurgical control include: frequent chemical analyses for each mix used in the cupola, chill tests for graphitizing tendency, Talbot strips from the pipe wall, ring tests on rings cut from the pipe, full length bursting tests of pipe, impact tests, direct tensile tests, and others. One of the routine tests of the finished product is the hydrostatic test to which every length is subjected. Correlation of the values obtained from all of these tests with service performance of the castings have enabled the cast iron pressure pipe industry to produce progressively better and more reliable cast iron pipe and fittings.

METALLURGY OF DUCTILE IRON PIPE

Structure. Ductile iron is usually defined as cast iron with primary graphite in the nodular or spheroidal form. This change in the graphite form is accomplished by adding an inoculant, usually magnesium, to molten iron of appropriate composition.

The matrix is predominately ferritic for maximum impact resistance and ductility.

The chemical composition of ductile iron is similar to gray cast iron except for the inoculant addition. The chemistry is adjusted to meet the physical test requirements of the Standards.

Push-on-Joint. The push-on joint was developed in 1956 and represents one of the greatest advances in the water distribution field in recent years. This joint consists of a single rubber gasket placed in a groove inside the bell end of the pipe. By pushing the plain end of the pipe through the lubricated rubber gasket, the gasket is compressed and the joint becomes pressure tight. Assembly of the push-on joint is simple and fast. Users report increases in installation rate of 50% to 100%. Large bell holes are not required for this joint, and it may be assembled under wet-trench condition.

Special Joints. Several special joints are available. These joints include ball and socket for submarine or stream crossings, plain end coupled, threaded and coupled, and lock type. The latter three are generally used in plant construction.

MANUFACTURE OF CAST IRON PIPE

The centrifugal casting methods used in manufacturing cast iron pipe have been in the process of commercial development and refinement for the past 45 years. The steady improvements that have led to the present state of the art have been covered by literally hundreds of patents and technical papers, and represent the ingenuity of many dedicated engineers, metallurgists, and foundrymen. The history of the outstanding developments cannot be stated in this Handbook, but a brief description of the two processes, designated by the different types of molds used to cast the pipe, will follow.

A. Centrifugal Casting in Metal Molds

A controlled amount of molten iron having the proper characteristics is introduced into a rotating metal mold, fitted with a socket core, in such a way as to uniformly distribute the metal over the interior of the mold surface by the centrifugal force generated. The centrifugal force holds the metal in place until solidification occurs. When the pipe has been cooled in the mold to the point where it can be handled, the mold is stopped and the pipe is withdrawn. The cycle can then be repeated. The mold is held at proper operating temperature by a controlled water bath or spray system.

Pipe cast in metal molds may be cast on special thin mold-coatings to protect the mold surface or otherwise improve casting conditions.

Pipe cast in metal molds is normally annealed after casting to produce the prescribed physical and mechanical properties and

eliminate any casting stresses that may have been present.
After cleaning, hydrostatic testing, dimensional gaging, weighing, coating, lining and marking, the pipe is ready for shipment.
Ductile iron pipe is produced from specially treated molten iron; otherwise, the process is essentially the same as described for gray iron pipe.

B. Centrifugal Casting in Sand-Lined Molds

By this process, pipe is cast centrifugally in sand-lined molds, which are prepared by either of two methods. In one, a metal pattern corresponding to the outside diameter of the pipe is positioned inside a metal flask, molding sand is rammed into the annular space between the pattern and flask and the pattern is then withdrawn. In the other, no pattern is used, and the mold is formed by centrifugally lining the heated flask with a measured amount of a mixture of a thermosetting resin and sand. Before casting, the ends of the mold are closed with cores, one of which forms the bell socket.
Molten gray iron or ductile iron, as required, is prepared under close laboratory control to insure an iron of the proper analysis to produce the physical properties specified by the appropriate American Standard. A weighed amount of the molten iron is introduced into the spinning flask and the pipe is formed by centrifugal force.
After the pipe has solidified, the casting machine is stopped and the flask is removed. Gray iron pipe, when cast in rammed sand molds, is cooled in the mold before stripping and, when cast in resin-sand molds, is stripped, then oven cooled under controlled time-temperature conditions. Ductile iron pipe cast in either type of mold is furnace annealed after stripping. After cleaning, hydrostatic testing, dimensional gaging, weighing, coating, lining and marking, the pipe is ready for shipment.

METALLURGY OF GRAY CAST IRON PIPE

Structure. Gray cast iron is essentially an alloy of iron and carbon containing appropriate amounts of silicon, manganese, phosphorus and sulfur. In gray cast iron, a major part of the carbon content occurs as free carbon or graphite in the form of flakes interspersed throughout the metal. The engineering properties specific to gray cast iron are principally due to the presence of these graphite flakes.

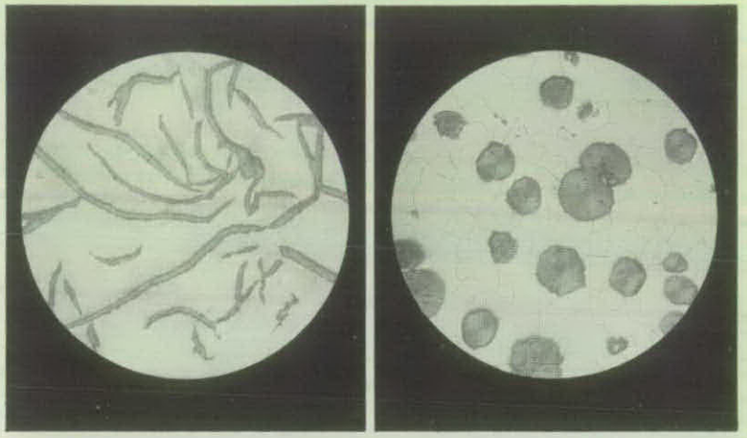

COMPARISON OF GRAPHITE PARTICLES

The gray cast iron on the left shows flake graphitic particles. The ductile iron on the right has spheroidal graphite.

The excellent corrosion resistance of cast iron pipe in underground service is well known. The corrosion products of cast iron pipe are tightly adherent and help protect the metal beneath. The appreciable amount of graphite, about 10%, by volume, together with relatively inert iron oxides and phosphides, causes gray cast iron to be characteristically corrosion resistant.

In corrosive environments where the metallic content of cast iron pipe is reduced by corrosion, the corrosion products of cast iron form an interlocking mat of graphite, phosphides and iron oxides, which is dense and strong enough to enable the pipe to continue to serve indefinitely as an effective conduit in many instances.

Machinability of any metal structure is important, particularly where it must be drilled, tapped, or cut with ordinary tools. At a given hardness level cast iron is more easily machined than most other metals because the graphite flakes break up the chips and lubricate the cutting tool.

SECTION 2

FLOW OF WATER IN CAST IRON PIPE

FLOW OF WATER IN CAST IRON PIPE

FACTORS AFFECTING FLOW CAPACITY IN WATER MAINS

In some areas of the United States water mains have lost an appreciable part of their original carrying capacity after years of service, and for this reason consideration of the causes of this trouble and the remedies are of interest. Loss of carrying capacity results in increased costs either because of extra pumping expense or additional capital outlay if larger mains are required. There are many reasons for a reduction in the flow capacity of a pipeline. Increased head loss in a pipeline may be due to one or a combination of the following:

1. Sedimentation; mud, silt or sand.
2. Obstruction of the pipe due to debris; sticks, boards, stones, tools and other objects that may have gotten into the pipe during construction.
3. Partly closed valves.
4. Accumulation of air at summits.
5. Mineral deposits.
6. Slime growths on walls of pipe.
7. Tuberculation.

All of these difficulties can be remedied by proper design, operation and maintenance.

Sedimentation. Transmission mains that carry raw water from rivers or lakes are subject to heavy deposits of silt and sand, especially when the rivers are at flood stage, or the lakes are turbulent. Many of the older distribution systems were supplied with raw water for years before the construction of treatment plants. During low flow conditions (low velocities), these waters deposit a layer of sediment along the bottom of the pipe. Sand may enter the raw water intake lines at most any time, and it may enter the distribution lines whenever the filters become defective or when the beds are inadequately maintained. If sedimentation has occurred, the remedy is to initiate and follow through with a main flushing program. If this type program is not effective, a pipe cleaning program may be necessary. It is important that the cause of the problem be determined and that remedial measures be undertaken to correct the situation; i.e., redesign of inlet works if required or initiate a preventive operating and maintenance program.

Obstructions in Pipe. Modern pipe laying specifications require that each length of pipe be cleaned out before installation in the line. They also require that the end of the pipeline be closed with a plug after each day's work. In spite of these provisions, it is a fact that at times undesirable objects are left or get placed in pipelines. Careful visual inspection of the pipe interior during installation and proper flushing technique upon completion of the pipeline should eliminate this difficulty.

Partly Closed Valves. In the ordinary operation of a water works system, it becomes necessary from time to time to close valves to carry on maintenance and extension work and in some systems, valves are throttled for pressure control purposes. Care should be taken to see that closed valves are opened after the construction work is completed and the location of throttle valves properly recorded so that in the event that future operation requires a full opening, these valves may be opened. The opening and closing of valves is an important part of distribution system maintenance. Records should be kept on each valve to ascertain its performance and to be certain that no valves are accidentally left closed or partly closed.

Accumulation of Air at Summits. In supply lines there is occasionally an opportunity for air to accumulate at a summit so that the water can occupy only a portion of the total area of the pipe. The remedy for this difficulty is to provide air release valves at summits of the pipeline. Air release valves are also necessary for filling the lines when they are first placed in service or after being shut down to make repairs. When testing a portion of a new installation, it is important to have air release valves in all summits of that section.

Mineral Deposits. In rare cases, waters are highly mineralized. These minerals are picked up from the rock formations through which the water moves in its underground passage. Some waters are super-saturated and the minerals only loosely held in solution. A small amount of air mixed with water in the pumping operation or a quick change in water temperature, may cause the mineral to be deposited. Natural lime waters usually form a hard deposit on the entire wall of the pipe and decrease the flow by reducing the diameter of the pipe. Mineral deposits in mains are difficult to remove, usually requiring special cleaning tools. Lime and alum deposits that result from softening and filtration processes are sometimes carried out into the mains. As a rule, these deposits are relatively soft and may be removed by ordinary pipe cleaning operations.

Flow Capacity of Cast Iron Water Pipe

Williams-Hazen Formula

Loss of Head Per 1,000 Feet of Pipe

Flow in Gallons Per 24 Hours	54-Inch Pipe				60-Inch Pipe			
	Velocity in Feet Per Second	Loss of Head in Feet			Velocity in Feet Per Second	Loss of Head in Feet		
		C=140	C=130	C=100		C=140	C=130	C=100
6,000,000	0.58	0.020	0.023	0.038	0.47	0.012	0.014	0.023
8,000,000	0.78	0.035	0.040	0.065	0.63	0.021	0.024	0.039
10,000,000	0.97	0.053	0.060	0.098	0.79	0.032	0.036	0.059
12,000,000	1.17	0.074	0.085	0.137	0.95	0.044	0.051	0.082
14,000,000	1.36	0.098	0.113	0.183	1.10	0.059	0.068	0.109
16,000,000	1.56	0.126	0.144	0.235	1.26	0.075	0.086	0.140
18,000,000	1.75	0.157	0.179	0.291	1.42	0.094	0.107	0.174
20,000,000	1.95	0.190	0.218	0.354	1.58	0.113	0.131	0.212
22,000,000	2.14	0.227	0.260	0.422	1.73	0.136	0.156	0.253
24,000,000	2.33	0.267	0.306	0.496	1.89	0.159	0.183	0.298
26,000,000	2.53	0.309	0.354	0.58	2.05	0.185	0.212	0.346
28,000,000	2.72	0.353	0.406	0.66	2.21	0.212	0.243	0.395
30,000,000	2.92	0.402	0.461	0.75	2.36	0.241	0.277	0.449
32,000,000	3.11	0.453	0.52	0.85	2.52	0.271	0.310	0.51
34,000,000	3.31	0.51	0.58	0.95	2.68	0.303	0.349	0.57
36,000,000	3.50	0.56	0.65	1.05	2.84	0.338	0.388	0.63
38,000,000	3.70	0.62	0.72	1.17	2.99	0.372	0.428	0.70
40,000,000	3.89	0.68	0.79	1.28	3.15	0.41	0.47	0.76
45,000,000	4.37	0.85	0.97	1.59	3.55	0.51	0.59	0.95
50,000,000	4.86	1.04	1.19	1.94	3.94	0.62	0.71	1.16
55,000,000	5.35	1.24	1.42	2.30	4.33	0.74	0.85	1.38
60,000,000	5.84	1.46	1.67	2.71	4.73	0.87	1.00	1.62
65,000,000	6.32	1.68	1.93	3.14	5.12	1.02	1.16	1 88
70,000,000	6.81	1.93	2.22	3.61	5.52	1.16	1.33	2.17
75,000,000	7.30	2.20	2.52	4.10	5.91	1.32	1.51	2.46
80,000,000	7.78	2.48	2.84	4.61	6.30	1.48	1.70	2.78
85,000,000	8.27	2.78	3.18	5.20	6.70	1.66	1.90	3.09
90,000,000	8.76	3.08	3.52	5.80	7.09	1.84	2.12	3.44
95,000,000	9.24	3.41	3.91	6.40	7.49	2.03	2.34	3.80
100,000,000	9.73	3.75	4.30	7.00	7.88	2.24	2.57	4.19

Slime Growths. Some water supplies are troubled with organic growths in the mains. Many of the growths may be due to the use of surface water containing microscopic organisms. While most of these organisms have little effect on the quality of the water, they may cling to the walls of the pipe, thereby reducing the rate of flow in the line. Organic growths may be removed by the use of chlorine, a combination of chlorine and ammonia, or copper sulfate. The nature of the treatment depends on each individual case and the application of chemicals should usually be started by the use of small dosages with gradual increase until the required effect results. A sudden change in chemical dosage could release many of the organisms into the distribution system, thereby causing taste, odor or turbidity complaints from the consumer.

Tuberculation. In certain parts of the United States, uncoated or unlined cast iron water mains may develop a growth on the interior surface of the pipe. These growths are called tubercles and their accumulation has a two-fold effect upon flow capacity: (1) it reduces the actual inside diameter of the main; and, (2) the rough surface of the pipe creates a turbulence in the flow and causes additional frictional head loss. These growths can only occur where the water comes in contact with the metal of the pipe and the remedy for this situation is to use cement-mortar linings wherever aggressive waters are to be transported.

CEMENT-MORTAR LINED CAST IRON PIPE

Historical Development. The first cast iron water mains were not coated or lined, but were installed in the same condition in which they came from the casting molds. After many years use, it became evident that the interior of the pipe was affected by certain types of water. The use of bituminous coating was proposed, and most of the cast iron pipe sold for water works service after about 1860 were provided with a hot dip bituminous lining and coating, usually of molten tar pitch. In those systems where the water was relatively hard and slightly alkaline, the bituminous linings were generally satisfactory. Where soft or acid waters were encountered, however, problems frequently arose, such as the water becoming red or rusty and a gradual reduction of the flow rate through the pipe. Corrosive water penetrated the pinholes in the tar coating and tuberculation ensued. The need of a better pipe lining to combat tuberculation led to experiments and research with cement mortar as a lining material.

In 1922, the first cement-lined cast iron pipe was installed in the water distribution system of Charleston, South Carolina. This pipe was lined by means of a projectile drawn through the pipe.

This process, however, soon gave way to a centrifugal process. Since 1922 many improvements have been made in the production of cement-lined pipe. Cement-mortar lined pipes are centrifugally lined at the foundry to assure that the best possible quality control is maintained; and that a uniform thickness of mortar is distributed throughout the entire length of the pipe. Cement linings prevent tuberculation by keeping the water from contacting the iron. The linings are smooth and offer very little frictional resistance to the flow of water. Most cast iron pipe installed in water systems today are cement lined.

Lining Process. The centrifugal process of applying cement-mortar linings is used in modern practice. By using this method, excellent quality control of the cement-mortar and the centrifugal lining operation can be maintained. Centrifugal lining enables the pipe manufacturer to produce cement-lined pipe of the highest quality —smooth, free of defects and meeting the rigid requirements of American Standard A21.4, "Cement-Mortar Lining for Cast Iron Pipe and Fittings for Water."

The lined pipe are stored in a moist atmosphere during the curing period, or given a seal coating to prevent too rapid loss of moisture. The cement lining adheres to the wall of the pipe so that the pipe may be cut and tapped without damage to the lining.

Economics of Cement Lining. The advantages of cement-lined cast iron pipe go beyond the prevention of tuberculation and are clearly applicable to installations in territories where tuberculating waters do not exist. In order to fully understand the financial advantages of using cement linings, it is necessary to have some knowledge of certain hydraulic phenomena.

When water moves through pipe, friction is developed between the water and the inside of the pipe. The result is that, as the water travels through the pipe, some of the energy imparted to it by the pump is consumed by the friction, resulting in a loss of pressure. The amount of friction so developed is the criterion by which the size of pipe, and the amount of power required for pumping, are determined. When a given amount of water is to be transported, the total amount of friction developed depends on the diameter and length of the pipe and the condition of its interior.

The principal advantages of cement linings are higher flow coefficient when the pipe is new and maintained carrying capacity as the pipe grows older. The economy resulting from the prevention of tuberculation is obvious, but experience has shown that less friction results when cement linings are used even where non-tuberculating waters are transported.

Flow Capacity of Cast Iron Water Pipe

Williams-Hazen Formula

Loss of Head Per 1,000 Feet of Pipe

Flow in Gallons Per 24 Hours	42-Inch Pipe				48-Inch Pipe			
	Velocity in Feet Per Second	Loss of Head in Feet			Velocity in Feet Per Second	Loss of Head in Feet		
		C=140	C=130	C=100		C=140	C=130	C=100
3,000,000	0.48	0.019	0.022	0.036	0.37	0.010	0.012	0.019
4,000,000	0.64	0.033	0.038	0.061	0.49	0.017	0.020	0.032
5,000,000	0.80	0.050	0.057	0.092	0.62	0.026	0.030	0.048
6,000,000	0.96	0.070	0.080	0.129	0.74	0.036	0.042	0.068
7,000,000	1.13	0.092	0.106	0.172	0.86	0.048	0.055	0.090
8,000,000	1.29	0.118	0.136	0.220	0.98	0.062	0.071	0.115
9,000,000	1.45	0.147	0.168	0.273	1.11	0.077	0.088	0.143
10,000,000	1.61	0.178	0.207	0.332	1.23	0.094	0.107	0.174
12,000,000	1.93	0.251	0.288	0.468	1.48	0.131	0.150	0.243
14,000,000	2.25	0.333	0.382	0.62	1.72	0.174	0.199	0.324
16,000,000	2.57	0.428	0.49	0.80	1.97	0.222	0.256	0.417
18,000,000	2.89	0.53	0.61	0.99	2.22	0.277	0.319	0.52
20,000,000	3.22	0.64	0.74	1.21	2.46	0.338	0.387	0.63
22,000,000	3.53	0.77	0.88	1.44	2.71	0.401	0.46	0.75
24,000,000	3.86	0.90	1.04	1.68	2.96	0.472	0.54	0.88
26,000,000	4.18	1.05	1.21	1.96	3.20	0.55	0.63	1.02
28,000,000	4.50	1.21	1.38	2.25	3.45	0.63	0.72	1.17
30,000,000	4.82	1.37	1.57	2.56	3.69	0.72	0.82	1.33
32,000,000	5.15	1.54	1.77	2.88	3.94	0.80	0.92	1.50
34,000,000	5.47	1.73	1.98	3.21	4.19	0.90	1.03	1.68
36,000,000	5.79	1.92	2.20	3.58	4.43	1.00	1.15	1.87
38,000,000	6.11	2.12	2.43	3.95	4.68	1.11	1.27	2.07
40,000,000	6.45	2.33	2.68	4.35	4.92	1.22	1.39	2.28
42,000,000	6.75	2.56	2.92	4.76	5.17	1.33	1.53	2.49
44,000,000	7.08	2.78	3.19	5.20	5.42	1.45	1.67	2.71
46,000,000	7.40	3.02	3.48	5.60	5.66	1.58	1.81	2.94
48,000,000	7.72	3.28	3.76	6.10	5.91	1.71	1.96	3.19
50,000,000	8.04	3.52	4.05	6.60	6.16	1.84	2.12	3.44
55,000,000	8.84	4.21	4.82	7.80	6.77	2.19	2.52	4.09
60,000,000	9.65	4.94	5.70	9.20	7.39	2.58	2.97	4.80

Flow Capacity of Cast Iron Water Pipe

Williams-Hazen Formula

Loss of Head Per 1,000 Feet of Pipe

Flow in Gallons Per 24 Hours	30-Inch Pipe				36-Inch Pipe			
	Velocity in Feet Per Second	Loss of Head in Feet			Velocity in Feet Per Second	Loss of Head in Feet		
		C=140	C=130	C=100		C=140	C=130	C=100
1,500,000	0.47	0.028	0.032	0.052	0.33	0.011	0.013	0.021
2,000,000	0.63	0.047	0.054	0.087	0.44	0.019	0.022	0.036
2,500,000	0.79	0.071	0.081	0.132	0.55	0.029	0.033	0.054
3,000,000	0.95	0.099	0.113	0.184	0.66	0.041	0.047	0.076
3,500,000	1.10	0.132	0.151	0.247	0.77	0.054	0.062	0.102
4,000,000	1.26	0.168	0.194	0.315	0.88	0.070	0.080	0.129
4,500,000	1.42	0.210	0.241	0.391	0.98	0.086	0.099	0.160
5,000,000	1.58	0.256	0.292	0.476	1.09	0.105	0.121	0.196
5,500,000	1.73	0.304	0.349	0.57	1.20	0.125	0.143	0.232
6,000,000	1.89	0.357	0.410	0.67	1.31	0.147	0.168	0.274
6,500,000	2.05	0.414	0.475	0.78	1.42	0.170	0.195	0.316
7,000,000	2.21	0.474	0.55	0.89	1.53	0.196	0.224	0.365
7,500,000	2.36	0.54	0.62	1.01	1.64	0.221	0.253	0.411
8,000,000	2.52	0.61	0.70	1.13	1.75	0.250	0.288	0.467
8,500,000	2.68	0.68	0.78	1.27	1.86	0.280	0.320	0.52
9,000,000	2.84	0.76	0.87	1.42	1.97	0.311	0.358	0.58
10,000,000	3.15	0.92	1.06	1.72	2.19	0.379	0.434	0.71
11,000,000	3.47	1.09	1.26	2.06	2.41	0.451	0.52	0.84
12,000,000	3.78	1.28	1.47	2.41	2.63	0.53	0.61	0.99
13,000,000	4.10	1.50	1.72	2.79	2.85	0.62	0.71	1.15
14,000,000	4.41	1.72	1.97	3.20	3.06	0.71	0.81	1.32
15,000,000	4.73	1.95	2.24	3.64	3.28	0.80	0.92	1.49
16,000,000	5.04	2.20	2.52	4.10	3.50	0.90	1.03	1.68
17,000,000	5.36	2.46	2.82	4.59	3.72	1.02	1.16	1.88
18,000,000	5.67	2.74	3.14	5.10	3.94	1.12	1.29	2.10
19,000,000	5.99	3.02	3.47	5.60	4.16	1.24	1.43	2.32
20,000,000	6.30	3.33	3.81	6.20	4.38	1.37	1.57	2.55
22,000,000	6.93	3.96	4.55	7.40	4.82	1.63	1.87	3.04
24,000,000	7.56	4.65	5.40	8.70	5.25	1.92	2.20	3.58
26,000,000	8.20	5.40	6.20	10.10	5.69	2.22	2.55	4.14

For example, a test made on a new 36-inch bituminous lined cast iron supply line showed a coefficient of approximately 135. A test on a new 36-inch cement-lined cast iron line showed a coefficient of 145. Since new pipe was tested in both cases, the difference in values was due to the different conditions of the pipe interiors.

Financial Advantages. As a demonstration of the financial advantages accruing from the use of cement linings, consider a typical instance based on a 24″ pipe, 30,000 feet long carrying 8 mgd.

Tests made on numerous cement-lined pipe installations have established a "C" value of 140. (See Table 1.)

Tests made on bituminous lined pipe have established a "C" value of 130 when new, and a "C" value of approximately 100 after 30 years service. Assuming no increase in demand and a pumping cost of $0.05 per million gallons to lift water one foot in elevation, the annual cost of pumping water against friction head only, if bituminous lined pipe were used (actual inside diameter 24.44 inches), would range from $8,322.00 per year when the pipe was new (C = 130) to $13,797.00 per year when the pipe was 30 years old (C = 100).

In the case of the 24-inch cement-lined pipe (actual inside diameter = 24.25″), the pumping cost for the first year with a "C" value of 140 (See Table 2), would be $7,533.60 and would remain at that figure throughout the 30-year period. The actual saving for this period, resulting from the use of cement-lined pipe, would be $105,780.00.

In the case of smaller diameter pipe used in distribution systems, sizes are usually determined by fire protection requirements. The additional volume of water available when cement linings are used may stop a fire in its early stages that would otherwise become a conflagration.

Where tuberculating waters are carried, the falling-off in capacity of smaller bituminous lined mains occurs at a faster rate than is the case with larger mains. This can mean that in a relatively short time the capacity of bituminous lined pipe is so reduced that cleaning or replacement becomes advisable. Cement lining is a minor part of the total cost of a pipeline project, and assures high carrying capacity for the life of the pipe.

TABLE 1

Flow Tests of Cement-Mortar Lined Cast Iron Pipe

Location	Size Inches	Length Feet	Age Years	Williams and Hazen C
Alma, Mo.	6	23,800	1	137
Birmingham, Ala.	6	473	new	146
Bowling Green, Ohio	20	45,600	1	143
Casper, Wyo.	12	500	new	141
Chicago, Ill.	36	7,200	1	147
Cleveland, Tenn.	20	31,400	2	144
Colorado Springs, Colo.	20	7,000	3	137
Concord, N. H.	14	500	new	151
Copporas Cove, Tex.	8	28,100	1	144
Corder, Mo.	8	21,400	1	145
Corpus Christi, Tex.	36	74,400	new	145
Fitchburg, Mass.	20	500	1	142
Gary, Ind.	20	8,000	1	140
	16	500	1	138
Greensboro, N.C.	30	848	3	148
Hartford, Conn.	16	800	1	149
New Orleans, La.	12	37,300	1	141
	16	4,100	1	135
Newton, Iowa	20	27,300	1	144
Safford, Ariz.	12	23,200	2	145
Simpsonville, S.C.	16	27,700	1	137
St. Louis, Mo.	30	17,700	new	151
Univ. of Illinois	4	400	new	149
	6	400	new	151
	8	400	new	150

Flow Capacity of Cast Iron Water Pipe

Williams-Hazen Formula

Loss of Head Per 1,000 Feet of Pipe

Flow in Gallons Per 24 Hours	20-Inch Pipe				24-Inch Pipe			
	Velocity in Feet Per Second	Loss of Head in Feet			Velocity in Feet Per Second	Loss of Head in Feet		
		C=140	C=130	C=100		C=140	C=130	C=100
600,000	0.43	0.037	0.049	0.068				
800,000	0.57	0.062	0.071	0.115				
1,000,000	0.71	0.094	0.107	0.174	0.49	0.038	0.044	0.072
1,200,000	0.85	0.131	0.150	0.243	0.59	0.054	0.062	0.100
1,400,000	0.99	0.174	0.200	0.326	0.69	0.071	0.082	0.133
1,600,000	1.13	0.223	0.257	0.416	0.79	0.092	0.105	0.170
1,800,000	1.28	0.278	0.319	0.52	0.89	0.113	0.130	0.212
2,000,000	1.42	0.339	0.389	0.63	0.98	0.138	0.159	0.259
2,500,000	1.77	0.51	0.58	0.95	1.23	0.210	0.240	0.39
3,000,000	2.13	0.72	0.82	1.33	1.48	0.293	0.338	0.55
3,500,000	2.48	0.95	1.09	1.78	1.72	0.391	0.449	0.73
4,000,000	2.84	1.22	1.39	2.28	1.97	0.50	0.58	0.93
4,500,000	3.19	1.52	1.74	2.83	2.22	0.62	0.72	1.16
5,000,000	3.55	1.84	2.11	3.43	2.46	0.76	0.87	1.41
5,500,000	3.90	2.20	2.52	4.09	2.71	0.90	1.03	1.68
6,000,000	4.26	2.59	2.97	4.81	2.96	1.06	1.22	1.97
6,500,000	4.61	3.00	3.43	5.60	3.20	1.23	1.41	2.29
7,000,000	4.96	3.43	3.95	6.40	3.45	1.41	1.62	2.63
7,500,000	5.32	3.90	4.48	7.30	3.69	1.61	1.84	2.98
8,000,000	5.67	4.39	5.10	8.20	3.94	1.81	2.07	3.38
8,500,000	6.03	4.91	5.60	9.20	4.19	2.02	2.32	3.77
9,000,000	6.38	5.50	6.30	10.20	4.43	2.26	2.58	4.20
9,500,000	6.74	6.00	6.90	11.30	4.68	2.48	2.85	4.62
10,000,000	7.09	6.60	7.60	12.40	4.92	2.73	3.12	5.10
11,000,000	7.80	7.90	9.10	14.80	5.42	3.26	3.74	6.10
12,000,000	8.51	9.40	10.70	17.40	5.91	3.82	4.39	7.10
13,000,000	9.22	10.80	12.40	20.10	6.40	4.45	5.10	8.30
14,000,000	9.93	12.40	14.20	23.10	6.89	5.10	5.80	9.50
15,000,000	10.64	14.10	16.20	26.20	7.39	5.80	6.60	10.80
16,000,000	11.35	15.80	18.20	29.60	7.88	6.60	7.50	12.20

Flow Capacity of Cast Iron Water Pipe

Williams-Hazen Formula

Loss of Head Per 1,000 Feet of Pipe

Flow in Gallons Per 24 Hours	16-Inch Pipe				18-Inch Pipe			
	Velocity in Feet Per Second	Loss of Head in Feet			Velocity in Feet Per Second	Loss of Head in Feet		
		C=140	C=130	C=100		C=140	C=130	C=100
400,000	0.44	0.051	0.058	0.095	0.35	0.029	0.033	0.053
600,000	0.66	0.108	0.124	0.201	0.52	0.061	0.069	0.113
800,000	0.89	0.183	0.210	0.34	0.70	0.103	0.118	0.193
1,000,000	1.11	0.278	0.319	0.52	0.88	0.156	0.179	0.291
1,200,000	1.33	0.389	0.446	0.72	1.05	0.218	0.251	0.409
1,400,000	1.55	0.52	0.60	0.96	1.22	0.290	0.333	0.54
1,600,000	1.77	0.66	0.76	1.23	1.40	0.374	0.43	0.69
1,800,000	1.99	0.82	0.95	1.53	1.57	0.461	0.53	0.86
2,000,000	2.22	1.00	1.15	1.87	1.75	0.56	0.65	1.05
2,200,000	2.44	1.19	1.37	2.22	1.93	0.67	0.77	1.25
2,400,000	2.66	1.41	1.62	2.62	2.10	0.79	0.90	1.47
2,600,000	2.88	1.63	1.87	3.03	2.28	0.92	1.06	1.71
2,800,000	3.10	1.87	2.15	3.49	2.45	1.05	1.21	1.96
3,000,000	3.32	2.12	2.43	3.98	2.63	1.19	1.37	2.23
3,500,000	3.87	2.81	3.21	5.10	3.07	1.58	1.83	2.96
4,000,000	4.43	3.61	4.15	6.80	3.50	2.02	2.34	3.79
4,500,000	4.99	4.50	5.20	8.40	3.94	2.53	2.92	4.71
5,000,000	5.54	5.50	6.30	10.20	4.38	3.07	3.53	5.70
5,500,000	6.09	6.60	7.50	12.20	4.83	3.68	4.20	6.80
6,000,000	6.65	7.70	8.80	14.30	5.25	4.31	4.95	8.00
6,500,000	7.20	8.90	10.20	16.60	5.70	4.98	5.70	9.30
7,000,000	7.76	10.20	11.70	19.00	6.13	5.80	6.60	10.70
7,500,000	8.31	11.60	13.30	21.70	6.57	6.50	7.50	12.20
8,000,000	8.86	13.10	14.90	24.20	7.01	7.40	8.40	13.60
8,500,000	9.42	14.50	16.60	27.00	7.45	8.20	9.40	15.30
9,000,000	9.97	16.30	18.60	30.20	7.90	9.10	10.50	17.00
9,500,000	10.53	17.80	20.50	33.20	8.33	10.10	11.60	18.80
10,000,000	11.08	19.80	22.60	36.80	8.76	11.10	12.70	20.80
11,000,000	12.19	23.60	27.00	44.00	9.65	13.30	15.20	24.60
12,000,000	13.30	27.80	31.80	52.00	10.50	15.60	17.80	29.00

TABLE 2

Flow Tests of Cement-Lined Cast Iron Pipe After Extended Periods of Service*

Location	Size Inches	Length Feet	Test Age Years	Williams and Hazen C
Birmingham, Ala.	6	473	1	148
			6	141
			12	138
			17	133
Catskill, N.Y.	16	30,825	25	136
Champaign, Ill.	16	3,920	13	137
			22	139
			28	145
			36	130
Charleston, S.C.	5.78	300	new	145
			12	146
			16	143
	12	500	15	145
			25	136
Chicago, Ill.	36	7,200	1	147
			12	151
Concord, N.H.	12	500	13	143
			29	140
			36	140
Danvers, Mass.	20	500	31	135
			38	133
Greenville, S.C.	30	87,400	13	148
			20	146
	30	50,700	19	148
			25	146
Greenville, Tenn.	12	500	13	134
			29	137
			36	146
Knoxville, Tenn.	10	500	16	134
			32	135
			39	138
Manchester, N.H.	12	500	5	151
			19	132
			26	140
Safford, Ariz.	10		16	144

*Test programs have been conducted in a number of cities over a period of years to determine the effectiveness of cement lining in maintaining a high flow coefficient over long service periods. These field investigations, which include pipe in service for up to 39 years, show that the cement-mortar linings are continuing to serve the purpose for which they were intended: maintaining a high flow coefficient in the water mains. The results of field testing at several locations are shown in the above table.

WILLIAMS AND HAZEN FLOW TABLES

Williams and Hazen Formula. The calculation of the friction head loss or drop in pressure in a pipeline is almost an everyday problem for the water works engineer. These calculations are based on equations developed by hydraulic engineers after conducting numerous flow tests on actual working water mains. Several formulas were developed by such men as Darcy, Chezy, Cutter, Manning, Williams and Hazen, and others. Of these, the formula and tables prepared by Williams and Hazen have proved to be the most popular.

For more than half a century, engineers have been guided in determining pipe capacity by the Williams and Hazen formula: $V = Cr^{0.63}s^{0.54}0.001^{-0.04}$, where; V = Velocity in feet per second; r = Hydraulic Radius in Feet (one-fourth inside diameter for pipe flowing full); s = Hydraulic Slope in feet per foot; C = An empirical coefficient which varies with the degree of roughness of the interior wall of the pipe.

This formula was developed empirically from results of tests on a number of water lines throughout the United States. The coefficient "C" in this formula is intended to reflect the condition of the pipe interior. The smoother the interior surface of the pipe wall, the higher the value of "C" and the greater the carrying capacity of the pipe.

The tests on which this formula was based indicated that new bituminous lined cast iron pipe had a "C" coefficient of 130, and that, as time went on, with certain waters, it fell off to less than 100. For design purposes it became the custom to use a "C" coefficient of 100.

Since most waters do not cause serious tuberculation, the practice of using a value of 100 represented conservative design. Pipe lines designed according to that value performed above par; that is, either pumping costs were lower than contemplated, or capacities exceeded those assumed in the original design. The reverse was true where growths developed in the pipe restricting the flow to the point where higher pressures were needed at the pumping station, pipe cleaning was resorted to, or even new lines required.

Many tests conducted in the field on long-working lines suggests the following values of "C" for design purposes.

Use C = 140 for cement-lined transmission mains and supply lines.

Use C = 130 for cement-lined secondary mains of shorter length and smaller diameter.

Flow Capacity of Cast Iron Water Pipe
Williams-Hazen Formula
Loss of Head Per 1,000 Feet of Pipe

Flow in Gallons Per 24 Hours	12-Inch Pipe				14-Inch Pipe			
	Velocity in Feet Per Second	Loss of Head in Feet			Velocity in Feet Per Second	Loss of Head in Feet		
		C=140	C=130	C=100		C=140	C=130	C=100
300,000	0.59	0.12	0.14	0.22	0.43	0.057	0.066	0.107
400,000	0.79	0.20	0.24	0.38	0.58	0.098	0.112	0.182
500,000	0.99	0.31	0.36	0.58	0.72	0.147	0.169	0.275
600,000	1.18	0.44	0.50	0.81	0.87	0.207	0.238	0.388
700,000	1.38	0.58	0.66	1.08	1.01	0.277	0.317	0.52
800,000	1.58	0.74	0.85	1.38	1.16	0.351	0.406	0.66
900,000	1.77	0.92	1.06	1.72	1.30	0.44	0.50	0.82
1,000,000	1.97	1.12	1.29	2.10	1.45	0.53	0.61	1.00
1,100,000	2.17	1.34	1.54	2.50	1.59	0.63	0.73	1.18
1,200,000	2.36	1.58	1.81	2.94	1.73	0.74	0.86	1.38
1,300,000	2.56	1.83	2.10	3.40	1.88	0.86	0.99	1.62
1,400,000	2.76	2.10	2.40	3.90	2.02	0.99	1.14	1.85
1,500,000	2.96	2.39	2.73	4.43	2.17	1.13	1.28	2.10
1,600,000	3.15	2.69	3.09	5.00	2.31	1.27	1.46	2.37
1,700,000	3.35	3.00	3.45	5.60	2.46	1.42	1.63	2.65
1,800,000	3.55	3.33	3.82	6.20	2.60	1.58	1.82	2.93
1,900,000	3.74	3.70	4.24	6.90	2.75	1.74	1.99	3.24
2,000,000	3.94	4.06	4.65	7.60	2.90	1.92	2.20	3.57
2,200,000	4.33	4.85	5.60	9.00	3.18	2.33	2.64	4.28
2,400,000	4.73	5.70	6.50	10.50	3.48	2.69	3.08	5.00
2,600,000	5.12	6.60	7.60	12.30	3.76	3.12	3.58	5.80
2,800,000	5.52	7.60	8.70	14.10	4.05	3.58	4.12	6.70
3,000,000	5.91	8.60	9.90	16.00	4.35	4.07	4.65	7.60
3,500,000	6.89	11.40	13.20	21.30	5.07	5.40	6.20	10.10
4,000,000	7.88	14.50	16.60	27.00	5.79	6.90	8.00	12.90
4,500,000	8.87	18.00	20.60	33.60	6.51	8.60	9.90	16.10
5,000,000	9.85	22.00	25.10	41.00	7.24	10.40	12.00	19.50
5,500,000	10.84	26.50	30.30	49.40	7.96	12.50	14.30	23.20
6,000,000	11.82	31.10	35.70	58.00	8.68	14.70	16.80	27.30
7,000,000	13.79	41.20	47.20	77.00	10.12	19.50	22.30	36.50

Flow Capacity of Cast Iron Water Pipe
Williams-Hazen Formula
Loss of Head Per 1,000 Feet of Pipe

Flow in Gallons Per 24 Hours	8-Inch Pipe				10-Inch Pipe			
	Velocity in Feet Per Second	Loss of Head in Feet			Velocity in Feet Per Second	Loss of Head in Feet		
		C=140	C=130	C=100		C=140	C=130	C=100
200,000	0.89	0.41	0.47	0.77				
220,000	0.98	0.49	0.56	0.92				
240,000	1.06	0.58	0.66	1.07				
260,000	1.15	0.67	0.77	1.25				
280,000	1.24	0.77	0.88	1.43				
300,000	1.33	0.87	1.00	1.62	0.85	0.29	0.34	0.55
320,000	1.42	0.98	1.13	1.84	0.91	0.33	0.38	0.62
340,000	1.51	1.10	1.26	2.05	0.96	0.37	0.42	0.69
360,000	1.60	1.22	1.40	2.28	1.02	0.41	0.47	0.77
380,000	1.68	1.35	1.55	2.51	1.08	0.45	0.52	0.85
400,000	1.77	1.48	1.70	2.76	1.13	0.50	0.57	0.93
450,000	1.99	1.85	2.11	3.43	1.28	0.62	0.71	1.16
500,000	2.22	2.25	2.58	4.18	1.42	0.76	0.87	1.41
550,000	2.44	2.68	3.07	5.00	1.56	0.90	1.03	1.68
600,000	2.66	3.14	3.61	5.90	1.70	1.06	1.21	1.97
650,000	2.88	3.64	4.18	6.80	1.84	1.23	1.41	2.29
700 000	3.10	4.19	4.80	7.80	1.99	1.41	1.62	2.64
750,000	3.32	4.73	5.40	8.80	2.13	1.60	1.84	3.00
800,000	3.55	5.30	6.10	9.90	2.27	1.81	2.08	3.38
900,000	3.99	6.70	7.60	12.40	2.55	2.24	2.58	4.18
1,000,000	4.43	8.10	9.30	15.10	2.84	2.73	3.13	5.10
1,100,000	4.88	9.60	11.10	18.00	3.12	3.25	3.72	6.10
1,200,000	5.37	11.30	13.00	21.10	3.40	3.82	4.40	7.10
1,300,000	5.76	13.10	15.10	24.50	3.69	4.44	5.10	8.30
1,400,000	6.20	15.10	17.30	28.10	3.97	5.10	5.80	9.50
1,500,000	6.65	17.00	19.50	31.80	4.26	5.80	6.70	10.80
1,600,000	7.09	19.20	22.00	35.80	4.54	6.50	7.50	12.20
1,800,000	7.98	23.80	27.20	44.20	5.11	8.10	9.30	15.10
2,000,000	8.86	29.00	33.30	54.00	5.67	9.90	11.30	18.40
2,400,000	10.64	41.00	47.00	77.00	6.81	13.70	15.70	25.50

Use C = 100 for city distribution work involving a large number of fittings, hydrants, services, short runs of pipe and for old unlined pipelines.

Field tests of new cement-mortar lined cast iron pipe shows the value of "C" to range from 140 to 150. Cement-lined cast iron pipe should be used in order to maintain the original carrying capacity of the line.

FLOW TEST RESULTS ON CEMENT-MORTAR LINED CAST IRON PIPE

A pipe lining, to be satisfactory must provide a high Williams and Hazen flow coefficient "C" initially and must have sufficient durability to retain a high flow coefficient over many years of service. Unless the lining meets the above requirements its other properties, chemical or physical, are of little significance.

Numerous flow tests have been made on operating lines throughout the United States to determine how well cement-mortar linings meet these basic requirements. Tests on both new and old water mains have established the average value of "C" that can be expected of new cement-lined cast iron pipe, and also provide a measure of the continued effectiveness of such linings over extended periods of service.

Table 1 shows the results obtained from a number of friction flow tests made on new, or relatively new, cement-lined cast iron pipe. The average value of "C" for new pipe of 4-inch through 36-inch diameter was found to be 144.

Example Computations.

The following three example problems have been prepared as a guide to the use of the Williams and Hazen tables which follow:

EXAMPLE NO. 1—Find the friction head loss in five miles of 24-inch cement-lined cast iron pipe supply line, delivering 6,000,000 gallons per 24 hours. A coefficient of C = 140 should be used for a pipeline of this character, and by referring to the table for 24-inch pipe the friction head loss is 1.06 feet per 1,000 feet of main (reading across the table from the 6,000,000 gallon rate of flow in the column under C = 140). Then the friction head loss in the pipeline will be $5 \times \frac{5280}{1000} \times 1.06 = 28$ feet, which is equivalent to 12.1 psi pressure drop.

EXAMPLE NO. 2—Find the friction head loss in 500 feet of unlined 8-inch cast iron distribution main laid twenty years ago, delivering 400,000 gallons per 24 hours. A coefficient of C = 100 should be used for a condition of this kind. By referring to the table for 8-inch pipe and by reading across from the 400,000 gallon per day rate of flow and in the column under C = 100, we

find a head loss of 2.76 feet per thousand feet of pipe. The friction head loss will be $\frac{500}{1000} \times 2.76 = 1.38$ feet, which is less than one psi pressure drop.

EXAMPLE NO. 3—How much water will a 16-inch cement-lined cast iron pipe, 6,000 feet long, deliver when the head (or pressure) at the supply end is 120 feet and a residual head of 100 feet is desired at the delivery end of the line. By subtracting the desired residual pressure from the initial pressure, we find that 20 feet head is available for overcoming the friction loss. As the water main is 6,000 feet long, the head that can be expended for each 1,000 feet of pipe is 20 divided by 6, or 3.33 ft. By referring to the table of 16-inch pipe in the column C = 140, we find that with a friction head loss of 3.33 feet per thousand feet of pipe, the pipe in question will deliver 3,825,000 gallons per 24 hours.

Flow Capacity of Cast Iron Water Pipe
Williams-Hazen Formula
Loss of Head Per 1,000 Feet of Pipe

Flow in Gallons Per 24 Hours	2-Inch Pipe				3-Inch Pipe			
	Velocity in Feet Per Second	Loss of Head in Feet			Velocity in Feet Per Second	Loss of Head in Feet		
		C=120	C=100	C=80		C=120	C=100	C=80
8,640	0.61	1.4	2.0	2.9				
14,400	1.02	3.6	5.0	7.6	0.45	0.50	0.7	1.0
28,800	2.04	12.9	18.2	27.5	0.91	1.80	2.5	3.8
36,000	2.55	19.6	27.3	41.6	1.13	2.71	3.8	5.8
43,200	3.06	27.3	38.4	58.0	1.36	3.81	5.4	8.1
50,400	3.57	36.6	51.0	78.0	1.59	5.10	7.1	10.7
57,600	4.08	46.8	66.0	99.0	1.82	6.50	9.1	13.8
72,000	5.11	71.0	99.0	150.0	2.27	9.80	13.8	20.8
86,400	6.13	99.0	139.0	210.0	2.72	13.70	19.2	29.1
100,800	7.15	132.0	184.0	280.0	3.18	18.30	25.7	38.8
108,000	7.66	149.0	209.0	318.0	3.41	20.70	29.0	43.8
115,200	8.17	169.0	237.0	358.0	3.63	23.40	32.8	49.6
129,600	9.19	210.0	294.0	447.0	4.09	29.10	40.8	62.0
144,000	10.21	256.0	358.0	540.0	4.54	35.20	49.6	75.0
172,800	12.25	360.0	500.0	760.0	5.45	49.70	70.0	106.0
201,600	14.30	479.0	670.0		6.35	66.00	92.0	139.0
230,400	16.34	610.0	860.0		7.26	84.00	118.0	179.0
259,200					8.17	106.00	148.0	223.0
288,000					9.08	128.00	178.0	271.0
316,800					9.99	153.00	213.0	323.0
345,600					10.89	179.00	251.0	380.0

Flow Capacity of Cast Iron Water Pipe
Williams-Hazen Formula
Loss of Head Per 1,000 Feet of Pipe

Flow in Gallons Per 24 Hours	4-Inch Pipe				6-Inch Pipe			
	Velocity in Feet Per Second	Loss of Head in Feet			Velocity in Feet Per Second	Loss of Head in Feet		
		C=140	C=130	C=100		C=140	C=130	C=100
20,000	0.36	0.17	0.19	0.32				
30,000	0.53	0.36	0.41	0.67				
40,000	0.71	0.61	0.70	1.13				
50,000	0.89	0.92	1.05	1.71	0.39	0.13	0.15	0.24
60,000	1.07	1.29	1.47	2.40	0.47	0.18	0.20	0.33
70,000	1.24	1.72	1.96	3.20	0.55	0.24	0.27	0.44
80,000	1.42	2.20	2.52	4.10	0.63	0.30	0.35	0.57
90,000	1.60	2.72	3.12	5.04	0.71	0.38	0.43	0.71
100,000	1.78	3.30	3.81	6.19	0.79	0.46	0.53	0.86
110,000	1.95	3.95	4.55	7.40	0.87	0.55	0.63	1.03
120,000	2.13	4.63	5.17	8.65	0.95	0.65	0.74	1.21
140,000	2.49	6.20	7.10	11.60	1.10	0.87	0.99	1.62
160,000	2.84	7.90	9.10	14.70	1.26	1.10	1.26	2.06
180,000	3.19	9.80	11.30	18.30	1.42	1.37	1.57	2.56
200,000	3.56	12.00	13.80	22.20	1.58	1.67	1.91	3.10
220,000	3.91	14.20	16.40	26.70	1.73	1.99	2.29	3.71
240,000	4.27	16.70	19.30	31.20	1.89	2.33	2.69	4.35
260,000	4.63	19.40	22.40	36.10	2.05	2.71	3.10	5.00
280,000	4.99	22.30	25.50	41.60	2.21	3.11	3.58	5.80
300,000	5.34	25.30	29.10	47.10	2.36	3.54	4.06	6.60
400,000	7.12	43.20	49.50		3.15	6.00	6.90	11.30
500,000					3.94	9.10	10.40	16.90
600,000					4.73	12.80	14.60	23.80
700,000					5.52	17.00	19.50	31.60
800 000					6.30	21.60	24.90	40.40
900,000					7.09	26.90	30.90	50.00
1,000,000					7.88	32.90	37.80	61.00

SECTION 3

DESIGN AND INSTALLATION OF CAST IRON PIPE

any leaks or other defects have been repaired, the trench should be backfilled.

Supports for Fittings. Supports should be constructed behind all bends, tees, caps and plugs. These supports should be designed to carry the load that will be imposed upon them with the pipeline carrying its maximum operating pressure and with a proper allowance for water hammer. The supports should bear against undisturbed earth and, if this is not possible, they should be designed with due consideration for the bearing capacity of the newly filled ground. Fittings in both the horizontal and vertical planes may require restraint. Supports should not be designed or constructed so that they will interfere with access to the joint.

Tie rods and clamps can also be used in close working conditions or for inside piping.

Backfilling. One phase of pipeline construction that is apt to receive casual attention is the backfilling. The idea of dumping the soil into the trench and allowing nature to take its course is a source of trouble. The proper method is to place the excavated material in such a manner as to minimize future settlement of the trench. All backfill material should be free of cinders, ashes, refuse, vegetable or organic material, boulders, large rocks, or other materials that are unsuitable. The backfill should provide a firm support all along the pipe, and should be hand tamped under the pipe so the pipe cannot settle. Fine material should be placed first around the pipe and the larger material used only after the backfill is above the top of the pipe.

Pipe Cutting. Considering that cast iron pipe is the most durable material in pressure pipe field; one would expect it to be the most difficult material to cut. This is not the case. The average workman, using the proper tools, can make a clean, neat cut without damaging the pipe or the cement mortar lining. All cuts should be at right angles to the axis of the pipe.

There are several types of mechanical pipe cutters available today. Among these are: the wheel cutter, hydraulic or mechanical "squeeze" cutters, guillotine saws, abrasive disc power saws, and power-driven milling wheel cutters. All these cutters can be used in the field and most can be used in the pipe trench. Many types of abrasive disc, saw blade and milling wheel cutters are available from the manufacturers of this type equipment. The hydraulic or mechanical "squeeze" cutter is not suitable for cutting ductile iron pipe.

A chisel or hardy and hammer may be used to cut gray cast iron pipe. Cut ends of push-on joint pipe must be beveled and sharp edges removed in order that the cut end of the pipe will not tear the rubber gasket when the pipe is pushed together.

DESIGN AND INSTALLATION OF CAST IRON PIPE

A. PIPE DESIGN

Operating and field conditions are important considerations in selecting the class of underground pipe. American Standards A21.6, A21.7, A21.8 and A21.9 for cast iron pipe and American Standards A21.51 and A21.52 for ductile iron pipe include comprehensive tables for the selection of pipe classes for various conditions. These selection tables are based on specific requirements and design methods which are explained in American Standards ASA-A21.1 for cast iron pipe and ASA-A21.50 for ductile iron pipe. The design methods in these manuals take into account the pipe stresses produced by operating pressures, transient surge pressures, earth loads and transient truck superloads. In addition, different methods of laying and bedding pipe are considered as to their effect on the stresses produced by external trench loads. Net design thicknesses are determined for the operating conditions, using allowable design stresses that are based on conservative factors of safety and strength values established by extensive structural testing of the pipe. Allowances for corrosion and casting tolerances are added to the net design thickness to obtain the total design thickness, which is used to select the class of pipe for installation.

B. INSTALLATION OF CAST IRON PIPE

The installation of cast iron pipe is often regarded as a simple task which can be performed by almost any kind of labor. This concept has arisen for several reasons: (1) The inherent strength of the material and (2) The fact that thousands of miles of cast iron mains, laid in some cases by semi-skilled labor, have given excellent service, in many cases for over 100 years. Laying cast iron pipe is a relatively simple job. However, experience and research have shown that certain elementary requirements should be observed to insure trouble-free service for the life of the material.

Good judgment suggests that it is more economical to use conscientious care in handling and installing pipe than it is to have to spend money later for maintenance. The handling and installation of cast iron pipe should be consistent with the care taken by the manufacturer in producing the pipe and handling it for shipment. There have been numerous recorded instances where a pipe failure was attributed to the pipe only to find that

the actual fault, was traced to the lack of reasonable care in handling or installing the pipe.

The following review of the principal points of good practice in the handling and laying of cast iron pipe may be helpful in the promotion of better pipeline construction.

Unloading Pipe. From the time the pipe is taken from the centrifugal casting machine, until it is loaded by special equipment on the freight cars or trucks, the manufacturers exercise care to avoid damage to their product. Each length of pipe is examined, hydraulically tested, and inspected before it is loaded for shipment. Precautions are taken to insure that the pipe will arrive at the jobsite, as it left the foundry, in first-class condition. Damage from rough handling in transit will occasionally occur; consequently, the purchaser or contractor should carefully inspect pipe as it is being unloaded. Damaged pipe should be noted on the freight bill and immediately brought to the attention of the transportation company's agent for his signature to insure proper adjustment. Neither the carrier nor the manufacturer can be held liable for damage discovered after the pipe delivery has been accepted.

In unloading, mechanical equipment should be used whenever possible. Dropping pipe to the ground from railroad cars or trucks is apt to cause damage which may not be detected until after the pipe is installed. Pipe being unloaded on skids should not be rolled or skidded against pipe already on the ground. Observance of these precautions takes little time or trouble and can save considerable future expense.

Delivery at the Trench Site. In the delivery of pipe, efficiency dictates that the pipe be strung along the route with the bell ends facing in the direction in which the work is to proceed. To avoid unnecessary handling, the pipe, as well as fittings, should be placed close to the locations they will occupy in the finished pipeline.

Traffic conditions, type of trench excavation, diameter of pipe and equipment to be used in construction are some of the factors which should be taken into consideration prior to stringing the pipe along the route.

In the northern states, valves, fittings and hydrants should be placed or stored where they will not collect rainwater and be susceptible to damage in freezing weather. Pipe for future use should be carefully stacked in layers with 4 x 4 in. timbers between each layer and blocked at the ends of each row to prevent rolling. The bottom layers should rest on heavy timbers to prevent dirt and rubbish from entering the pipe. For convenience and safety, each size and class should be stacked separately.

TABLE 3

Allowable Leakage for Mechanical Joint or Push-On Joint Pipe in 18 Ft. Nominal Lengths Based on AWWA C-600-64 Standard*

ALLOWABLE LEAKAGE PER 1000 FT.—GALLONS PER HOUR																
AVG. TEST PSI	PIPE SIZE—INCHES															
	2	3	4	6	8	10	12	14	16	18	20	24	30	36	42	48
400	0.60	0.90	1.20	1.80	2.40	3.00	3.60	4.20	4.80	5.40	6.00	7.20	9.00	10.80	12.60	14.40
375	0.58	0.87	1.16	1.74	2.32	2.90	3.48	4.06	4.64	5.22	5.80	6.96	8.70	10.44	12.18	13.92
350	0.56	0.84	1.12	1.68	2.24	2.80	3.36	3.92	4.48	5.04	5.60	6.72	8.40	10.08	11.76	13.44
325	0.54	0.81	1.08	1.62	2.16	2.70	3.24	3.78	4.32	4.86	5.40	6.48	8.10	9.72	11.34	12.96
300	0.52	0.78	1.04	1.56	2.08	2.60	3.12	3.64	4.16	4.68	5.20	6.24	7.80	9.36	10.92	12.48
275	0.50	0.75	1.00	1.50	2.00	2.50	3.00	3.50	4.00	4.50	5.00	6.00	7.50	9.00	10.50	12.00
250	0.48	0.71	0.95	1.42	1.90	2.38	2.85	3.33	3.80	4.28	4.75	5.70	7.13	8.55	9.98	11.40
225	0.45	0.68	0.90	1.35	1.80	2.25	2.70	3.15	3.60	4.05	4.50	5.40	6.76	8.11	9.46	10.81
200	0.42	0.64	0.85	1.27	1.70	2.12	2.55	2.97	3.40	3.82	4.25	5.10	6.37	7.64	8.92	10.19
175	0.40	0.60	0.79	1.19	1.59	1.99	2.38	2.78	3.18	3.58	3.97	4.77	5.96	7.15	8.34	9.54
150	0.37	0.55	0.74	1.10	1.47	1.84	2.20	2.58	2.94	3.31	3.68	4.41	5.52	6.62	7.72	8.83
140	0.36	0.53	0.71	1.07	1.42	1.78	2.13	2.49	2.84	3.20	3.55	4.26	5.33	6.40	7.46	8.53
130	0.35	0.51	0.69	1.03	1.37	1.71	2.06	2.40	2.74	3.08	3.42	4.11	5.14	6.16	7.19	8.22
120	0.33	0.49	0.66	0.99	1.32	1.64	1.98	2.30	2.63	2.96	3.29	3.95	4.93	5.92	6.91	7.89
110	0.31	0.47	0.63	0.94	1.26	1.58	1.89	2.21	2.52	2.83	3.15	3.78	4.72	5.67	6.61	7.56
100	0.30	0.45	0.60	0.90	1.20	1.50	1.80	2.10	2.40	2.70	3.00	3.60	4.50	5.40	6.31	7.21
90	0.28	0.43	0.57	0.86	1.14	1.42	1.71	1.99	2.28	2.56	2.85	3.42	4.27	5.13	5.98	6.84
80	0.27	0.40	0.54	0.80	1.08	1.34	1.61	1.88	2.15	2.42	2.69	3.22	4.03	4.84	5.64	6.45
70	0.25	0.38	0.50	0.75	1.00	1.26	1.51	1.76	2.01	2.26	2.51	3.01	3.77	4.52	5.28	6.03
60	0.23	0.35	0.46	0.70	0.93	1.16	1.39	1.63	1.86	2.09	2.32	2.79	3.49	4.19	4.89	5.58
50	0.21	0.32	0.42	0.64	0.85	1.06	1.28	1.49	1.70	1.91	2.12	2.55	3.19	3.82	4.46	5.10
40	0.19	0.28	0.38	0.57	0.76	0.95	1.14	1.33	1.52	1.71	1.90	2.28	2.85	3.42	3.99	4.56

*The allowable leakage for a pipeline is calculated by multiplying the leakage per hour per 1,000 ft at the average test pressure and for the diameter of pipe tested as obtained from the above table by the duration of the test in hours and the total length of the line being tested divided by 1,000. If the line under test contains sections of various diameters, the allowable leakage will be the sum of the computed leakage for each size.

maximum deflection of each joint is not exceeded.

Subaqueous pipelines in navigable waters should be placed in trenches and covered over so that the pipe is protected from injury or from being pulled up by boats dragging their anchors. Signs should be placed along the water's edge to warn water traffic that a buried pipeline is present.

In navigable waters, permits for construction should be obtained from the local, state or federal agency having jurisdiction over the waterway. These permits and their subsequent approvals will stipulate any and all special requirements which must be complied with during design and construction.

Testing Water Mains. Good engineering practice requires that all pipelines be tested before placing in service, and usually before backfilling. In congested areas, backfilling is done as soon as two or three lengths of pipe have been laid. In water mains, it is recommended that the test pressure should equal 250 psi, or the project design pressure plus an additional 100 psi water hammer, whichever is greater. Care should be taken to see that all the air is expelled and that all caps, plugs and fittings are properly braced before the test pressure is applied.

Air is expelled by opening a fire hydrant or air release valve at the high point of the line. When all the air is released, the valves between the old parts of the system and the line to be tested are closed. Pressure is then applied to the portion of the pipeline being tested by means of a hand or motor-driven pump. After the main has been brought up to the test pressure, it should be held at this pressure for at least two hours, with the leakage and pressure tests being conducted simultaneously. Any makeup water should be carefully measured by a meter or by pumping the water from a vessel of known volume.

The American Water Works Association Standard for the Installation of Cast Iron Water Mains (C-600) requires that the leakage shall not exceed 23.3 gallons per day, per mile of pipe, per inch of nominal diameter, for mechanical joint and push-on joint pipe in 18-foot lengths evaluated at a pressure of 150 pounds per square inch. Based on AWWA C-600, the allowable leakage for 1,000 feet of 18-foot lengths of mechanical joint or push-on joint pipe at various pressures and diameters is shown in table 3. Some engineers specify a maximum leakage allowance of one-half the amount of this table.

All exposed pipe, fittings and joints should be thoroughly inspected during the open-trench test. Any joint showing visible leaks should be remade until tight. Any cracked or defective pipe, or fitting, should be replaced and the test repeated until satisfactory results within the limits allowed are obtained. After

Earth Excavation. When space allows, it is a desirable safety measure to place the excavated material between the road traffic and the trench. Sufficient warning signs and safety measures should be provided to protect the contractor from liability in the event of accidents. The width of trench for various sizes of pipe is determined by the type of soil, the depth of laying, type of excavation equipment and the space required to allow the workmen ample room to thoroughly backfill around and under the pipeline. Generally speaking, the wider the trench, the greater the earth load on the pipe. However, the trench must be of sufficient width to enable the workmen to make up the joints and to tamp the backfill around the pipe. Most specifications allow the trench to be from one to two feet wider than the outside diameter of the pipe. The following table shows suggested minimum trench widths:

MINIMUM SUGGESTED TRENCH WIDTH

Pipe Size	4"	6"	8"	10"	12"	14"	16"
Trench Width	19"	21"	23"	25"	27"	29"	31"
Pipe Size	18"	20"	24"	30"	36"	42"	48"
Trench Width	33"	35"	42"	48"	54"	60"	66"

The bottom of the trench should be cut true and even, so that the barrel of the pipe will have a bearing along its full length. In areas where frost penetration is a factor, the depth of the trench for water pipe should be sufficient to bring the top of the pipe below the frost line. In the southern states, where there is little danger of freezing, an earth cover of from 2.5 to 4 feet in open country is usually sufficient. Mains laid under roadways, or railroads, or in any location where impact loads can be transmitted to the pipe, should be laid with sufficient earth cover to provide a cushion to absorb shocks due to the traffic.

Bell Holes. When using poured lead or mechanical-joint connections, it is desirable to dig bell holes large enough to insure the workmen ample room to calk the lead, operate an air-driven calking hammer or rotate a torque wrench. It is false economy to dig a bell hole so small that the workmen do not have room to make up the joint. On the other hand, too large bell holes are a detriment to the pipe in that they may place undue stresses on the pipe.

Rock Excavation. In rock excavation, it is necessary that the rock be removed so that at no place will it be closer than 6 inches to the finished pipeline. After the excavation is completed, a bed of sand, or selected backfill, at least 6 inches deep, should be placed

on the bottom of the trench and the pipe placed on this "cushion." Failure to do this may result in the pipe resting on a sharp projection of rock, a condition which could cause a break in the main.

Underground mains should be carried around obstructions, such as sewers, drain lines, piers, vaults and similar construction. Standard fittings should be used when these changes in directions are required. Pipe should not be allowed to rest on any unyielding structure, nor should it be called on to support another structure. Pipe should not be laid in a manner that will cause it to act as a beam unless special design considerations are given to the pipe. It should not be poured integrally in concrete walls, footings, piers, abutments or structures on piles, as the weight of the backfill and settlement of the trench often causes beam stresses, which were not considered in design. Wall sleeves or other wall castings should be used at the junction with these subsurface structures.

Breaks in Pipe. The durability of cast iron pipe, as proved by service records, occasionally persuades construction superintendents and contractors to disregard some of the elementary principles of pipe-laying practice.

Cast iron pipe is designed and produced to have wide margins of safety in beam strength, bursting strength and compressive strength. Inspection and hydrostatic testing of each length of cast iron pipe at the foundry insures the quality of the finished product. Even though the pipe is properly designed and foundry tested, breaks occasionally occur. There are many alleged causes however, most breaks result from one or a combination of the following reasons:

1. Impact damage to the pipe before or during installation.
2. Subjecting the pipe to loads in excess of those for which it was designed.
3. Excessive transient surge pressure (water hammer).
4. Damage to the pipe due to nearby underground construction work.
5. Beam or ring failures due to:
   a.) Poor construction practices
   b.) Resting on rock or other unyielding structures
   c.) Pipe foundation disturbances
   d.) Allowing other structures to rest on the pipe
6. Other contributors to breaks are:
   a.) Unequal settlement
   b.) Corrosion
   c.) Vibrations
   d.) Freezing
   e.) Water and ground temperature changes

Subaqueous Pipe Laying. There are several methods of installing cast iron pipe across rivers and other bodies of water; these methods depend on the type of crossing, diameter of pipe being used and the bottom conditions. The most common pipe used for this type construction is the ball and socket joint pipe. This type of pipe has a wide range of joint deflection and can readily follow the contour of the river bottom. Deflection tables for the various diameters of ball and socket joints can be obtained from the manufacturers of this type pipe.

Two types of ball and socket pipe are available; they are: the bolted connection and the boltless connection joints. Cutaway details of these joints are shown in Section 8, Page 5.

In shallow water, it is often economical to construct cofferdams and after pumping out the water, to lay the pipe as on dry land. If the body of water is navigable, the cofferdam should be constructed in sections to provide a channel for water traffic. In still water, the pipeline may be joined together on shore and floated to its final location by means of drums or rafts attached to the pipe. The weight of the pipe for buoyancy calculations is available from the pipe manufacturer. When the entire length of the pipeline is assembled, one end is towed or pulled out until the pipe occupies the desired position. The pipe is then lowered by releasing the drums, care being taken during the sinking operation so that the joints do not become overly deflected.

A somewhat similar method is to lay the pipe on sloping skids aligned with the pipe crossing and as each length is connected, it is pulled down on the skid into the water where the drums are attached. As each successive length is laid, the line extends farther into the water. The completed pipeline is then sunk in a manner described above.

Ball and socket cast iron pipe can readily be made up on a barge and the skid method of laying can be used. In this method, the skids, which are attached to the barge, should extend far enough below the water surface to ensure that the pipe joints will not deflect beyond their design limits as the barge progresses across the body of water.

Another method is to drive piles in pairs along the route of the pipeline and to rest the pipe on timbers supported between the piles. When the entire line is connected up, sills are laid across the tops of the piles and the pipe supported from these sills with rope, block and tackle or chain hoist. The pipe is then raised enough to release the timbers upon which it is resting and after their removal the line is gradually lowered to the bottom. It is not necessary that the line be lowered as a whole; however, the lowering should begin at one end and proceed to the other so that the

and gasket materials are included in American Standard A21.11.

Table 2 shows the Maximum Permissible Deflections in Laying Push-on Joint Pipe.

TABLE 2

Maximum Permissible Deflection in Laying Push-on Joint Pipe

Size of Pipe in.	Max. Permissible Deflection per Length—in.				Approx. Radius of Curve Produced by Succession of Joints—ft.			
	12-ft. Length	16-ft. Length	18-ft. Length	20-ft. Length	12-ft. Length	16-ft. Length	18-ft. Length	20-ft. Length
3	12	17	19	21	140	185	205	230
4	12	17	19	21	140	185	205	230
6	12	17	19	21	140	185	205	230
8	12	17	19	21	140	185	205	230
10	12	17	19	21	140	185	205	230
12	12	17	19	21	140	185	205	230
14	7½	10	11	12	230	300	340	380
16	7½	10	11	12	230	300	340	380
18	7½	10	11	12	230	300	340	380
20	7½	10	11	12	230	300	340	380
24	7½	10	11	12	230	300	340	380
30	7½	10	11	12	230	300	340	380
36	7½	10	11	12	230	300	340	380
42	5	6	7½	8	340	450	510	570
48	5	6	7½	8	340	450	510	570

TABLE 2

Maximum Permissible Deflection in Laying Push-on Joint Pipe

Size of Pipe in.	Max. Permissible Deflection per Length—in.				Approx. Radius of Curve Produced by Succession of Joints—ft.			
	12-ft. Length	16-ft. Length	18-ft. Length	20-ft. Length	12-ft. Length	16-ft. Length	18-ft. Length	20-ft. Length
3	12	17	19	21	140	185	205	230
4	12	17	19	21	140	185	205	230
6	12	17	19	21	140	185	205	230
8	12	17	19	21	140	185	205	230
10	12	17	19	21	140	185	205	230
12	12	17	19	21	140	185	205	230
14	7½	10	11	12	230	300	340	380
16	7½	10	11	12	230	300	340	380
18	7½	10	11	12	230	300	340	380
20	7½	10	11	12	230	300	340	380
24	7½	10	11	12	230	300	340	380
30	5	6	7½	8	340	450	510	570
36	5	6	7½	8	340	450	510	570
42	5	6	7½	8	340	450	510	570
48	5	6	7½	8	340	450	510	570

It is evident from both experience and theory that a principal cause for the occasional breaks in cast iron pipe in service is that the pipe is called upon to act as a beam. This condition is usually due to faulty installation, or because of disturbance by other utility construction at some later date. The proper preparation of the trench bottom so that the pipe rests for its entire length on undisturbed earth, or on a properly compacted bedding, will prevent future beam stress. The best way to prevent disturbance by other utility construction is for proper supervision of all construction in the vicinity of underground piping.

Another possible cause of breaks in pipe is surge pressure (water hammer) far beyond the standard allowances used in the design. Excessive surge pressure should be avoided by proper hydraulic design including the use of surge and air release valves and other devices for control of surge pressures.

With reasonable care in handling and installation, and with due regard to the hazards of other underground installations, breaks in cast iron pipe will continue to be, as they have in the past, a rare occurrence.

Methods of Installing Pipe. There are several types of trench bottom used in pipe laying. These include laying pipe on flat bottom trench; or in a trench bottom rounded out to fit the shape of the pipe. The American Standards Association has carried on research studies through its Committee, A21, at Iowa State University and the University of Illinois on pipe buried under these conditions. These studies of pipe laying conditions have developed relative strength values for various methods of installing pipe in the trench. Additional information on these laying conditions can be found in American Standard A21.1, "Thickness Design of Cast-Iron Pipe."

The drawings show the three recommended laying conditions and give the relative ratios to three-edge bearing for 12-inch pipe for the different laying conditions.

Laying Condition A

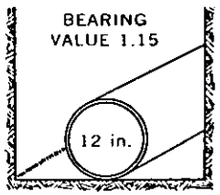

Flat Bottom Trench Backfill Not Tamped

Laying Condition B

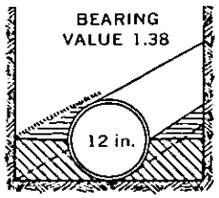

Flat Bottom Trench Backfill Tamped

Laying Condition F

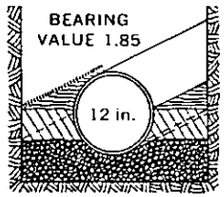

Pipe Bedded in Gravel or Sand, Backfill Tamped

Pipe supported on blocks, a method which was sometimes used in the 1920's and 1930's was recognized as an undesirable practice and is not recommended.

Handling Pipe and Appurtenances. Pipe and appurtenances should be handled by mechanical equipment whenever possible. These materials should never be rolled or pushed into the trench from the bank. Pipe up to 12 inches in diameter may be lowered into the trench by taking a turn of rope around each end of the pipe; while standing on one end of the rope, the workmen can then play out the rope until the pipe rests on the trench bottom. Large diameter pipe is best handled by means of mechanical equipment.

Before the pipe is lowered into the trench, it should be swabbed or brushed out to insure that no foreign material gets into the finished line. The socket of rubber gasket joint pipe should be wiped clean to remove all foreign materials. The spigot end of rubber gasket joint pipe should be wiped clean or brushed clean for this same reason. When pipe has remained along the right-of-way for a considerable time, it may become contaminated and should be disinfected with a chlorine solution prior to being installed in the trench. This can be done by passing a chlorine-soaked cloth swab through the pipe. Groundwater or surface runoff should not be allowed to enter the pipeline during construction, and the line should be kept closed by means of test plugs when work is not in progress.

Joint Materials. Mechanical Joints, Push-On Type Joints and Poured Lead Joints are the most common types for cast iron pipe. The rubber gasket joints, mechanical and push-on, have gained much favor both in the water and gas industries during recent years.

Lead Joints. Before entering the spigot of the pipe into the bell of the preceding length, strands of yarning material are held in place around the spigot so that both enter the socket at the same time. The yarn serves to center the spigot in the socket. The yarning material is then driven home with a yarning tool and thoroughly compacted.

After the joint is yarned, the lead runner is placed on the joint so that it fits tightly against the face of the bell. Clay should be used whenever necessary to make a tight joint between the runner and the pipe. The clay pouring gate should be built up to a point at least one inch above the top of the joint space. The lead is then poured through the gate and allowed to cool. The lead runner is removed and the joint is ready for calking.

Good calking practice requires that each calking tool be used, from the smallest to the largest, that will fit the joint space and that the joint be calked completely around with each tool.

Mechanical Joints. The mechanical joint, developed in the middle 1920's, is based upon the well-known engineering principle of the stuffing box. It has four parts: a flange, cast integral with the socket or bell of the pipe; a rubber gasket fitting a recess in the socket; a gland, or follower ring, to compress the gasket and the bolts and nuts for tightening the gland. The assembly of this joint is illustrated. An ordinary ratchet wrench is the only tool required. The joint assembly is quick and easy and presents little difficulty even in wet trench conditions.

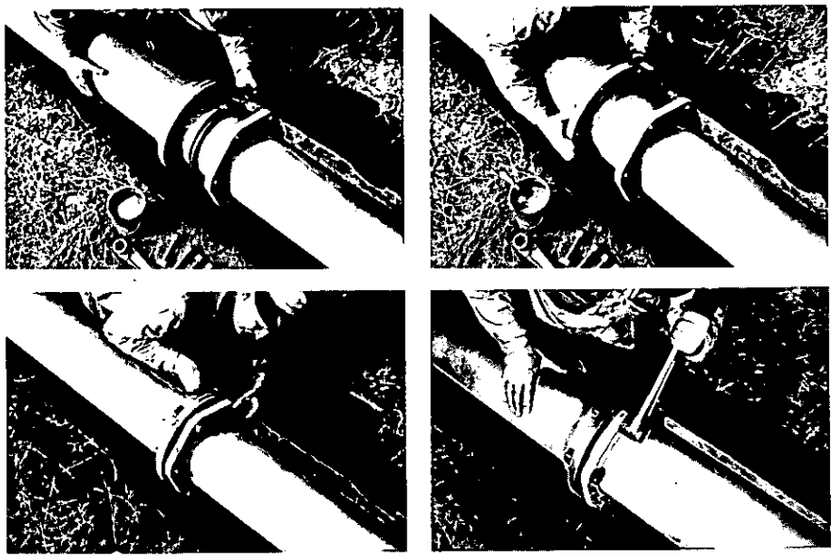

Some of the advantages of the mechanical joint are: it is bottle-tight at high pressures for both water and gas service; it permits a high degree of deflection, as table 1 indicates, and it allows for longitudinal expansion and contraction.

Push-on Joints. One of the greatest advances in the water distribution field in recent years has resulted from the development of the push-on type joint for cast iron pipe. This joint has only one accessory—a rubber ring gasket which fits an inside groove within the socket bell. The plain end of this pipe is beveled to avoid damage to the rubber gasket as the pipe is "pushed" home. A thin film of gasket lubricant, supplied by the pipe manufacturer in sterile cans, is used to facilitate joint assembly.

Push-on type joints incorporate the features of simplicity, ease of assembly, joint tightness, self-centering, ample deflections and decreased laying time with the single sealing element. The joint

SECTION 4

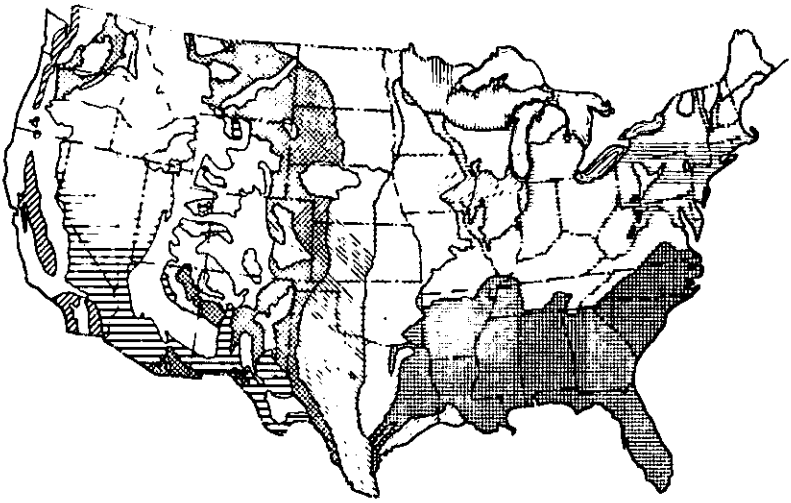

FACTORS AFFECTING CORROSION OF PIPELINES

Studies of the corrosion resistance of Gray Cast Iron and Ductile Iron have been completed by several organizations including The Cast Iron Pipe Research Association and The National Bureau of Standards. At the 1964 American Water Works Association Conference, F. L. LaQue, International Nickel Company, reported that his observations show no significant difference in corrosion behavior between flake graphite (Gray) and spheroidal graphite (Ductile) Cast Iron in several test soils. Melvin Romanoff, National Bureau of Standards, reported that tests in six different soils show that Ductile Iron corrodes at nearly the same rate, with respect to weight loss and pitting, as Gray Cast Iron in the same soil environments. The Cast Iron Pipe Research Association has completed a fourteen year comparative study of Ductile and Gray Iron Pipe in corrosive soils. The tests were made in extremely corrosive soils purposely selected to obtain accelerated rates of corrosion. The report on this study shows that under those very corrosive conditions, no significant difference was found in the strength of corrosion products of ductile iron and gray cast iron pipe. The report further shows that the resistance of ductile iron pipe to soil corrosion is equal to or somewhat better than that of gray cast iron pipe. The American Standard for the thickness design of ductile iron pipe (ASA A21.50) provides for an increase in pipe wall thickness of .08-in. which is an allowance for external corrosion. This is in keeping with the corrosion allowance recommended in ASA A21.1, the Standard for Thickness Design for Cast Iron Pipe. Present knowledge indicates that this corrosion allowance is adequate for most soils.

In areas which are suspected or known to be highly corrosive, the designer should take special precautions. Examples of such precautions include: increased thickness allowance for corrosion, improvement of trench conditions, use of loose polyethylene tube, or other means to prevent the pipe from coming into contact with the soil. Where unusually corrosive soil conditions are anticipated, a soil survey is recommended.

FACTORS AFFECTING CORROSION OF PIPELINES

INTERNAL CORROSION

While unlined or coated pipe have performed satisfactorily in some areas, aggressive waters have caused development of tuberculation on the interior pipe wall prior to the use of cement-mortar lining on cast iron pipe. In current practice, most cast iron pipe used in water service are cement lined.

While this minor attack does not affect the pipe structurally, the tuberculation which results is significant. The corrosion products (tubercles) which accumulate on the interior pipe wall reduce carrying capacity of the pipe. Tubercles are the result of an accumulation of products of electro-chemical corrosion and a buildup of growths by bacteriological action.

In electro-chemical corrosion, anodes develop where bare iron is exposed to aggressive water in the pipe. This starts a small pit at each anode. Iron goes into solution and hydrogen is deposited at a nearby cathode. The iron ions combine with available chemicals in the water, and corrosion products are formed. The development of tubercles in this way depends, in part, upon the chemical stability of the water in the pipe and its ability to serve as an electrolyte for the corrosion cell.

A tubercle often becomes inactive after a period of time and a membrane forms over its surface. Due to the continuously moist condition and to the tendency for the corrosive action in the cell to proceed, the membrane may break and an additional layer may be formed on the tubercle. Sulfate reducing bacteria can also contribute to the development of tubercles. This situation is accelerated if the bacteria precipitate iron which is already dissolved in the water. The precipitate promotes the formation of nodules, which are also identified as tubercles.

Most Cast Iron Pressure Pipe now being installed in water systems have been provided with a cement-mortar lining meeting the requirements of American Standard A21.4. This lining has been completely effective in preventing tuberculation. In existing pipelines which are not cement-mortar lined and are found to be transporting aggressive waters, correction can be accomplished by cleaning and cement lining in place, or by cleaning and water stabilization.

EXTERNAL CORROSION

The resistance of Cast Iron Pipe to exterior corrosion is well established. However, it should be recognized that there are conditions, both natural and man-made, which do result in corrosion of Cast Iron Pipe. Realizing this, the Cast Iron Pipe Research Association began studying soil corrosion many years ago in cooperation with The National Bureau of Standards and later developed test programs of its own. Much of this work is now carried on in test sites where the soils possess varied but extremely corrosive characteristics. In addition, continuing studies of Cast Iron Pipe in service are being carried out with the results correlated to permit accurate soil evaluation.

In soil survey work, corrosivity has been related to earth resistivity, moisture content, pH, degree of aeration, presence of sulfates, and likelihood of stray, direct currents. In the case of earth resistivity as related to the corrosion of gray iron or ductile iron pipe, soils with resistivity below 1,000 ohms-cm are considered potentially corrosive. As the resistivity increases above this level, the corrosivity of the soil becomes less and is dependent on other soil characteristics. Moisture content is important with respect to earth resistivity testing and interpretation. Also, moisture content of the soil and the length of time during which the soil is wet or saturated with water has considerable influence on corrosion rate.

Soil pH is important in the range of 0 – 4.0 in that very acid soil forms a good electrolyte conducive to development of local corrosion cells. Soil pH above 8.5 is usually high in dissolved salts, and is often corrosive due to the resulting low resistivity. Corrosion can result from the byproducts of sulfate reducing bacteria in neutral soils, which are poorly aerated and which contain sulfates. The degree of aeration is determined by measurement of the oxidation-reduction potential (redox). Soils with redox potential greater than 100 mv. do not support sulfate reducing bacteria. Soils with a negative redox potential (less than 0 mv.) are most conducive to bacterial corrosion. Qualitative determination of the presence of sulfides in the soil indicates the presence of sulfate reducing bacteria.

When Cast Iron Pipe corrodes, the products of corrosion are tightly adherent and thus the products resulting from initial attack often serve to inhibit further penetration by corrosion. This is due largely to the high carbon content (approximately 3.5%) in Gray Iron and Ductile Iron Pipe. In very severe situations where corrosion does penetrate the pipe wall, the corrosion products of Gray Iron and Ductile Iron Pipe usually have the

strength to withstand pressures higher than those encountered in normal water service. This is not true in other ferrous materials where the corrosion products have no strength and flake off, continually exposing a new surface to attack.

Most corrosion in water systems can be related to cinders, wastes, foreign materials, swamps, and high salinity soils. The Cast Iron Pipe Research Association's tests have resulted in the development of protective measures which can be applied at a minimum cost when the pipe is installed. One method is trench improvement by encasing the pipe in sand, limestone screenings, or a mixture of sand and cement. If this procedure is used, the encasement material should be a minimum of 8 in. thick, completely surrounding the pipe. Another effective and economical protective measure is the use of an 8 mil thick, loose polyethylene tube which is installed so as to completely enclose the pipe while it is being laid. The effectiveness of the loose polyethylene tube in highly corrosive soils has been proven through continuing tests begun in 1953.

Typical CIPRA test site installation

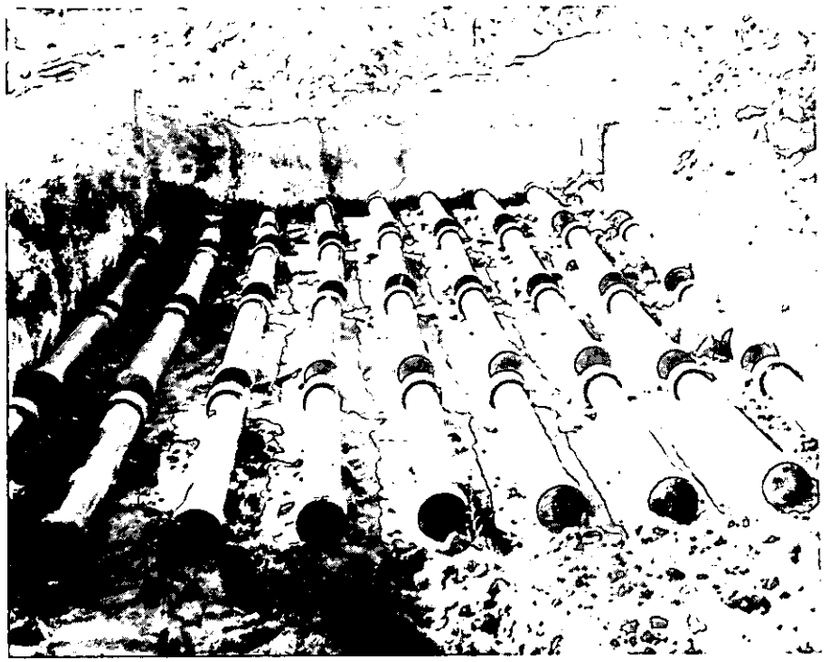

SECTION 5

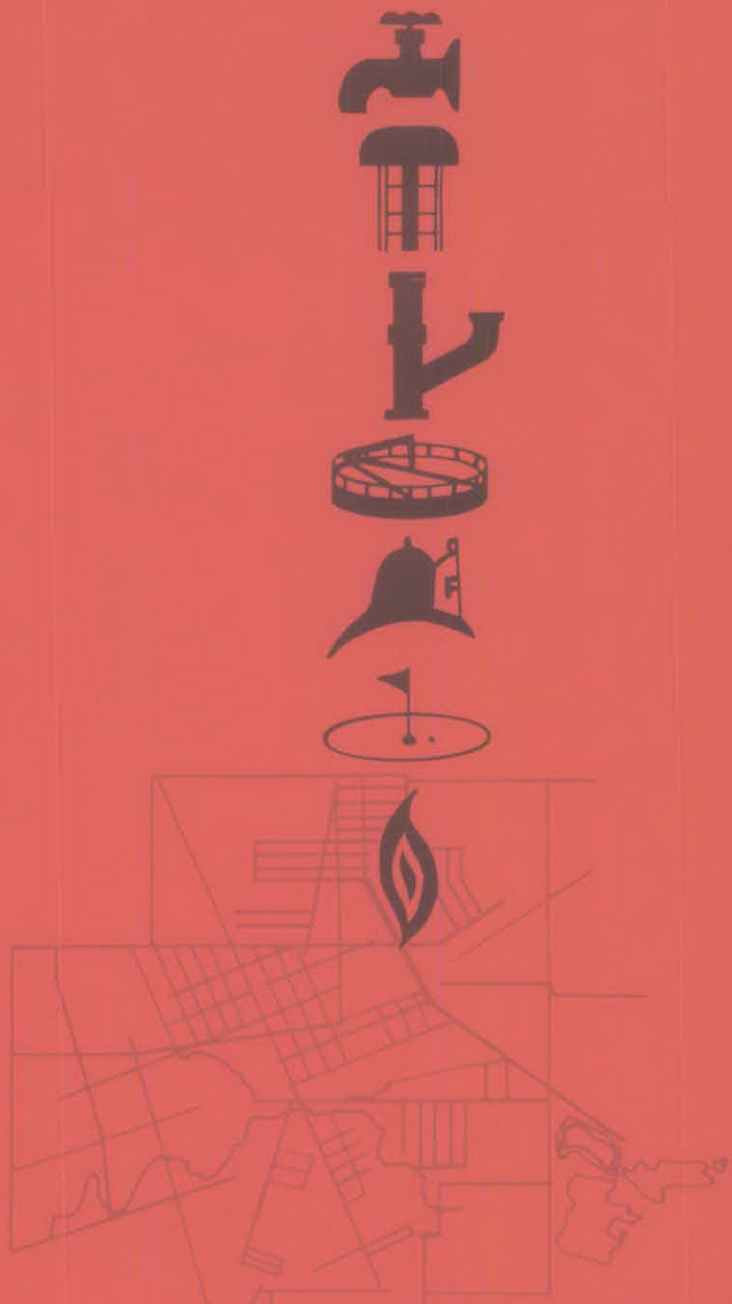

CAST IRON PIPING SYSTEMS

CAST IRON PIPING SYSTEMS

WATER TRANSMISSION & DISTRIBUTION SYSTEMS

A major component of any water supply facility is its transmission and distribution system which delivers the water to the consumer. The importance of the transmission and distribution piping system is emphasized by the fact that it usually represents more than 60% of the total dollar investment in the entire water supply facility. Furthermore, the health and safety of a community are largely dependent on the reliability and performance of the transmission and distribution system which must provide an unfailing supply of water for domestic consumption and fire protection. The pipe making up this system must therefore meet the highest, most exacting standards of quality. It must be durable, strong, and maintain a high flow capacity. It must have bottle-tight, easily assembled joints; and be easily cut and tapped in the field with standard tools and skills.

Modern cast iron pipe and fittings with the variety of joints available today best meets these criteria for transmission and distribution service. The established durability and long life of cast iron pipe proved by continuing service in over 100 municipalities after more than a century, insures the best return for this major capital investment. Its superior strength affords the lowest possible maintenance cost and uninterrupted service; while the sustained high carrying capacity of cement-lined cast iron pipe guarantees long term efficiency as a water carrier.

The variety of modern joints available for ordinary and special service conditions provide fast, economical, foolproof installation in any situation. The rubber gasket joints, both mechanical and push-on, are quickly and easily assembled thus keeping labor cost to the minimum; are bottle-tight; flexible and have a high resistance to shock and vibration. They are the most widely used today, accounting for more than 90% of all cast iron pipe presently being installed.

WATER AND WASTE WATER TREATMENT PLANTS

A variety of cast iron fittings and specials are available to meet the intricate piping layouts in water and waste water treatment plants and pumping stations. It is this factor, together with the durability and strength of cast iron pipe and fittings, that have made them the standard plant piping material for more than 100 years. Flanged pipe and fittings are particularly suited to this type of construction due to ease of installation in close quarters and the ability to withstand thrust without external restraint. These are important requirements for plant piping.

Because of the increased emphasis on more complete treatment of sewage and industrial wastes, most waste water treatment plants today are of the activated sludge type. Because much of the piping in these plants is underground or in concrete and not easily accessible for repairs, the permanently tight joints, durability, and strength of cast iron pipe and fittings are important

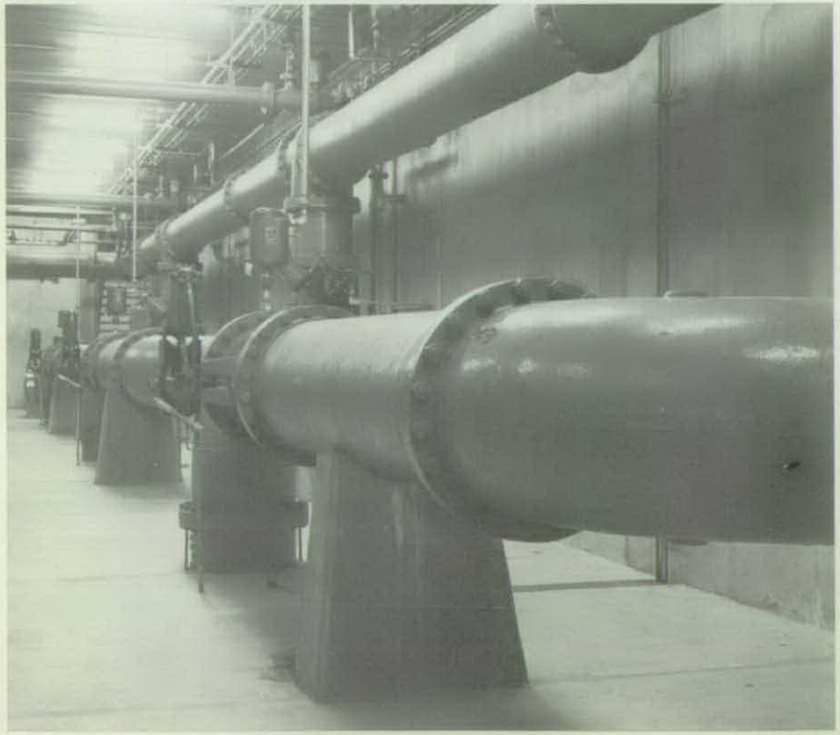

mechanical joint; the various conditions and methods of installation require a specialized joint which is both flexible and yet able to withstand end pull. Such a joint is the ball and socket, or flexible joint, which is available in several variations. All allow deflections up to 15 degrees per joint and provide a positive lock against joint separation by means of a retainer gland which locks the ball in the socket or bell.

The strength and flexibility of these joints allow installation from a ramp, either ashore or on a floating rig, where the pipe is assembled length by length and skidded or dragged to its position underwater. Another general method of installation requiring a positive lock against joint separation is for the pipe to be assembled on a shore and floated into position where it is then allowed to sink to a prepared location on the bottom.

These same characteristics of flexibility and positive joint locking make subaqueous joint cast iron pipe ideal for other difficult installations as well, such as, in very unstable soil where the pipeline must flex without joint separation; or on extreme grades where the pipeline is laid above ground and must nearly hang on itself.

GOLF COURSE IRRIGATION

Another application of increasing importance where the particular advantages of cast iron pipe are especially useful, is the underground permanent sprinkler systems such as a golf course irrigation system. In such a system, it is important that the pipe used be durable and completely reliable to provide trouble-free service without the expense and annoyance of torn up greens and fairways. Modern joints and long pipe lengths contribute to the reliability and permit rapid, foolproof installation with a minimum of disturbance of existing fairways.

These same qualities account for the extensive use of cast iron pipe in permanent sprinkler systems for other facilities, such as, parks, playgrounds, cemeteries, and schools or other public buildings.

SUBAQUEOUS PIPE INSTALLATIONS

Underwater pipeline construction presents certain difficulties not encountered in ordinary installations. Except in shallow waters with a relatively low velocity where the pipe may often be installed by conventional methods, using either a push-on or

qualities; as is its sustained carrying capacity, which keeps sludge pumping costs to a minimum.

Probably the most important property of cast iron pipe in waste water treatment plant service, however, is its superior corrosion resistance. Because of the often corrosive nature of the sludges, gases, and supernatant liquors encountered in waste treatment plants of all types, the use of cast iron pipe and fittings insures a material which will give long and satisfactory service.

SEWERAGE SYSTEMS

One of the principal problems facing our society today is that of water pollution. This has resulted in ever-increasing emphasis on effective, economical sewage collection, transportation, treatment, and disposal with billions of dollars per year being spent towards this end. A major portion of this investment is represented by sanitary sewage collection and transportation piping systems.

As with water distribution piping, durability, strength, ease and economy of installation, and hydraulic efficiency are important criteria for sanitary sewer pipe. Another and most important requirement for this service is permanently tight joints to prevent leakage, infiltration, or penetration by root systems. This requisite is well met by the variety of standard joints available with their performance proved by years of water main service.

Gravity sewer mains are frequently installed in deep excavations resulting in high external loading on the pipe; or sometimes in quite shallow cuts which can cause severe traffic and impact loading. The ability to apply a standard design procedure to these loads coupled with the high physical strength of cast iron pipe makes it an excellent choice for this service.

The service characteristics for sewer force mains closely parallel those for water mains which has resulted in the extensive use of cast iron pipe for pumped sewage pipelines. Especially important to a force main is the ability of cast iron pipe to maintain a high carrying capacity thus reducing sewage pumping costs to a minimum.

Cast iron pipe is particularly well suited for use as an outfall sewer. This service usually requires a pipeline to be installed a considerable distance into a large body of water, frequently salt or brackish, and with the inner or landward section laid in muck and alternately wet and dry. The corrosion resistance of cast iron pipe together with the perfect tightness and special qualities of the ball and socket joint for subaqueous installations are responsible for the popularity of cast iron pipe in this service.

SEWERAGE SYSTEMS

INDUSTRIAL APPLICATIONS

The strength, durability, and reliability of cast iron pipe are highly desirable qualities also in industrial plants where the consequences of pipe failure such as lost production or possible damage to expensive equipment, for example, can be extremely costly.

Aside from ordinary water supply service for both domestic and process use, there are a number of other applications for cast iron pipe in industrial plants. Chief among these are internal fire protection systems. The proven reliability of cast iron pipe is most important in high value plants which often contain extremely flammable materials.

Some of the other uses are cooling water lines, especially when salt or brackish water is used and corrosion resistance is essential; condensate return lines; lines carrying various process solutions requiring a corrosion-resistant conduit, and various types of waste and drain lines. Cast iron is also being used as an underground casing pipe for high temperature and pressure steam lines where durability and corrosion resistance are desirable.

SECTION 6

STANDARDS

ASA

AWWA

USA Standard

This USA Standard is one of nearly 3000 standards approved as American Standards by the American Standards Association. On August 24, 1966, the ASA was reconstituted as the United States of America Standards Institute. Standards approved as American Standards are now designated USA Standards. There is no change in their index identification or technical content.

ASA A21.1
(AWWA H1)

AMERICAN STANDARD FOR THICKNESS DESIGN OF CAST-IRON PIPE

ASA A21.1

UDC 621.774.1

USAS A21.1–1967
(AWWA H1–67)

USA STANDARD
for
THICKNESS DESIGN OF CAST-IRON PIPE

With Tables of Pipe Thicknesses

In Four Parts

Sec. 1–1—Thickness Tables for Standard Conditions
Sec. 1–2—General Procedure for Thickness Determination
Sec. 1–3—Design Theory—Determination of Net Thickness, Earth Load, and Truck Superload
Sec. 1–4—Thickness Determination for Pipe on Piers or Piling Aboveground or Underground

SPONSORS

AMERICAN GAS ASSOCIATION
AMERICAN SOCIETY FOR TESTING AND MATERIALS
AMERICAN WATER WORKS ASSOCIATION
NEW ENGLAND WATER WORKS ASSOCIATION

Approved by The USA Standards Institute, Nov. 10, 1967

PUBLISHED BY

AMERICAN WATER WORKS ASSOCIATION
Incorporated
2 Park Avenue, New York, N.Y. 10016

1P—327C—12/67

USA STANDARD

A USA Standard implies a consensus of those substantially concerned with its scope and provisions. The consensus principle extends to the initiation of work under the procedure of the Institute, to the method of work to be followed, and to the final approval of the standard.

A USA Standard is intended as a guide to aid the manufacturer, the consumer, and the general public. The existence of a USA Standard does not in any respect preclude any party who has approved of the standard from manufacturing, selling, or using products, processes, or procedures not conforming to the standard.

A USA Standard defines a product, process, or procedure with reference to one or more of the following: nomenclature, composition, construction, dimensions, tolerances, safety, operating characteristics, performance, quality, rating, certification, testing, and the service for which designed.

USA Standards are subject to periodic review. They are reaffirmed or revised to meet changing economic conditions and technological progress. Users of USA Standards are cautioned to secure the latest editions.

Producers of goods made in conformity with a USA Standard are encouraged to state on their own responsibility in advertising, promotion material, or on tags or labels, that the goods are produced in conformity with particular USA Standards. The inclusion in such advertising and promotion media, or on tags or labels, of information concerning the characteristics covered by the standard to define its scope is also encouraged.

TABLE 1-17

Load Factors for Pipe on Spaced Supports Aboveground and Underground

Pipe Size *in.*	Distance on Centers Between Supports—*ft*							
	6	8	9	10	12	16	18	20
	Load Factor for Flat Support							
3	0.19	0.14	0.13	0.11	0.10	0.07	0.06	0.06
4	0.22	0.17	0.15	0.13	0.11	0.08	0.07	0.07
6	0.31	0.23	0.21	0.19	0.16	0.12	0.10	0.09
8	0.40	0.30	0.27	0.24	0.20	0.15	0.13	0.12
10	0.50	0.38	0.33	0.30	0.25	0.19	0.17	0.15
12	0.60	0.45	0.40	0.36	0.30	0.23	0.20	0.18
14	0.67	0.50	0.45	0.40	0.33	0.25	0.22	0.20
16	0.73	0.55	0.49	0.44	0.36	0.27	0.24	0.22
18	0.78	0.59	0.52	0.47	0.39	0.29	0.26	0.23
20	0.81	0.61	0.54	0.49	0.40	0.30	0.27	0.24
24	0.87	0.65	0.58	0.52	0.43	0.33	0.29	0.26
30	0.93	0.70	0.62	0.56	0.46	0.35	0.31	0.28
36	0.96	0.72	0.64	0.58	0.48	0.36	0.32	0.29
42	0.98	0.73	0.65	0.59	0.49	0.37	0.33	0.29
48	0.99	0.74	0.66	0.60	0.50	0.37	0.33	0.30

Explanatory Note. 1. Load factor for saddle support is obtained by multiplying the load factor for flat support by the following modifiers:

Saddle Angle *deg.*	Modifier
30	1.25
45	1.40
60	1.55
90	1.87
120	2.13
180	2.35

2. Load factors for other distances between supports or for other saddle angles may be obtained by interpolation between tabulated values.

3. The load factor for flat support is equal to the load factor for laying condition C, A21.1–1957, multiplied by the ratio of 6-ft, the block spacing of laying condition C, to the distance between supports. The modifier for saddle support is obtained from Table 2 of Stresses in Pressure Pipelines and Protective Casing Pipes [M. G. Spangler, *J. Struct. Div. ASCE*, Vol. 82, No. ST5 (Sep. 1956)], by dividing K_b for 180 deg load and 0 deg support by K_b for 180 deg load and a support angle equal to the saddle angle.

4. The recommended minimum axial bearing length of supports, for underground pipe is 6 in. for 3–8-in. pipe, 12 in. for 10–24-in. pipe, and 18 in. for 30–48-in. pipe.

FOREWORD

This foreword is provided for information only and is not a part of USAS A21.1–1967 (AWWA H1–67).

On Sep. 10, 1902, NEWWA adopted a "Standard Specification for Cast-Iron Pipe and Special Castings," covering bell-and-spigot pit-cast pipe and fittings of ten thickness classes. The thickness classes were based on allowable internal pressures varying by increments of 50 ft of head.

On May 12, 1908, AWWA adopted a "Standard Specification for Cast-Iron Pipe and Special Castings," covering bell-and-spigot pit-cast pipe and fittings of eight classes, A through H, with allowable working pressures varying by increments of 100 ft of head from 100 to 800 ft. Dimensions and weights were given for pipe and fittings.

In 1926, ASA Sectional Committee (now USA Standards Committee) A21 on Cast-Iron Pipe and Fittings was organized under the sponsorship of A.G.A., ASTM, AWWA, and NEWWA and was assigned the following scope:

> Unification of specifications for cast-iron pipe, including materials; dimensions; pressure ratings; methods of manufacture (including such new developments as centrifugal casting) insofar as they may be necessary to secure satisfactory specifications; elimination of unnecessary sizes and varieties; consideration of the possibility of developing a coordinated scheme of metallic pipe and fittings applicable to all common mediums; and methods of making up joints insofar as they are determining as to the dimensional design of cast-iron pipe.
>
> The types of cast-iron pipe [are] to include bell-and-spigot pipe, flanged pipe, flanged and bell mouth fittings and wall castings, pipe elbows, tees, wyes, return bends, and other fittings not now included in standard lists; cast-iron pipe threaded for flanges or couplings. The standardization is not to include methods of installing pipe and similar matters, except as to the making up of joints in its relationship to the dimensional standardization of pipe and fittings, as noted above.

Sectional Committee A21 sponsored many tests of pipe and fittings; these included subjection of pipe to combined earth load and internal pressures (which form the basis of pipe thickness design), corrosion tests, measurement of hydraulic friction loss in fittings, and tests of bursting strengths of pipe and fittings. After exhaustive study of the test results and other research, the committee in 1939 issued A21.1, "American Standard Practice Manual for the Computation of Strength and Thickness of Cast Iron Pipe." The manual included nomograms and thickness tables for pit-cast pipe with 11/31 * iron strength. As stated in the preface to that manual, however, the design method was applicable to pipe of any iron strength.

Discussions and interpretations [1,2] of the method of design of cast-iron pipe were published in 1939 and presented to AWWA and A.G.A. As a result

* The first figure designates the bursting tensile strength in units of 1,000 psi and the second figure designates the ring modulus of rupture in units of 1,000 psi.

of these publications and because of the general acceptance of A21.1, a substantial volume of cast-iron pipe was designed by the new method and furnished to manufacturers' standards between 1939 and 1953. A standard (A21.2) for pit-cast pipe with 11/31 iron strength also was issued in 1939. Work on standards for centrifugally cast pipe with 18/40 iron strength was started after the design was completed in 1939, but, owing to the intervention of World War II and other causes, they were not formally issued until 1953.

In 1957, a revision of A21.1 was issued. In that revision, designated ASA A21.1–1957 (AWWA H1–57) the major change was the addition of a method for computing earth loads on pipe laid under embankments and of nomograms and thickness tables for centrifugally cast pipe with 18/40 iron strength.

In 1958, Sectional Committee A21 was reorganized. Subcommittees were established to study each group of standards in accordance with the review and revision policy of ASA (now USASI). The subcommittee on pipe (Subcommittee No. 1) was organized with the following assignment:

> The scope of the committee activity shall include an examination of all present A21 standards for pipe to determine what is needed to bring these up to date. The examination shall include A21.1, A21.2, A21.3, A21.6, A21.7, A21.8, and A21.9, as well as any other matters pertaining to pipe standards.

As a result of the work of Subcommittee No. 1 on this assignment, revisions of the cast-iron pipe standards A21.6(AWWA C106), A21.7, A21.8(AWWA C108) and A21.9 were issued in 1962. Revision of A21.1–1957 (AWWA H1–57) was delayed in order for the subcommittee to carry out a new assignment from the sectional committee to develop a design standard and pipe standards for ductile-iron pipe. Subsequently, the subcommittee completed its study and submitted a proposed revision to Sectional Committee A21 in 1965.

Major Features of This Revision

Although USAS A21.1–1967 (AWWA H1–67) contains no changes in the basic design method, a number of revisions have been incorporated to simplify the design procedure and to reflect changes in technology. Major features of this revision are discussed below.

1. *Format.* This revision is divided into four major sections: Sec. 1–1 gives thickness tables for standard conditions; Sec. 1–2 gives the general procedure for thickness determination; Sec. 1–3 gives design theory and provides methods for determining pipe thicknesses, earth loads, and truck superloads for both standard and special conditions; and Sec. 1–4 gives the design procedure for a special installation condition, pipe on piers aboveground or underground.

2. *Iron strength.* Thickness tables, nomograms, and other data for pit-cast pipe (11/31 iron strength) have been deleted, as this type of pipe is seldom furnished today.

Centrifugally cast pipe covered under USA Standards A21.6(AWWA C106), A21.7, A21.8(AWWA C108), and A21.9 are specified to have an iron strength of not less than 18/40. Advances in production technology have en-

some types of installations, such as gravity flow sewers, beam deflection may be a significant factor in the design. Beam stress and deflection are calculated from the following two formulas:

$$f = \frac{15.28WDL^2}{D^4 - d^4} \qquad (20)$$

$$y = \frac{30fL^2}{DE} \qquad (21)$$

in which:

f = beam stress (14,000 psi maximum)
W = external load, lb per ft (for aboveground pipe $W = W_p + W_w$; for underground pipe, $W = W_e + W_t$)
L = distance on centers between supports (ft)
D = outside diameter of pipe (in.)
d = inside diameter (D-2t) (in.)
t = net thickness (in.)
y = deflection at mid-span (in.)
E = modulus of elasticity, 15,000,000 psi.

TABLE 1–16

Weights of Pipe and Contained Water for Design of Aboveground Pipe

Pipe Size *in.*	Weight—lb/ft		Pipe Size *in.*	Weight—lb/ft	
	Pipe (W_P)*	Water (W_w)†		Pipe (W_P)*	Water (W_w)†
3	12	3	18	114	110
4	16	6	20	135	136
6	26	12	24	177	196
8	37	22	30	257	307
10	49	34	36	339	442
12	63	49	42	439	601
14	78	67	48	545	785
16	94	88			

* Based on Class 22 pipe. Although the computed thickness may differ from that given for Class 22, the effect of the difference in pipe weight usually will not have a significant effect on the computed thickness and recalculation usually will not be necessary.
† Based on nominal pipe size.

c. Enter the values of ring test load equivalent and internal pressure in the appropriate nomogram and read the net thickness.

The net thickness is selected from Case 1 or Case 2, whichever gives the greater computed thickness. To obtain total calculated thickness, corrosion allowance and casting tolerance are added to this net thickness as described in Sec. 1–2.2.

Sec. 1–4.4—Design Examples

a. Calculate the thickness of 24-in. cast-iron pipe, 18/40 iron strength, installed aboveground on piers spaced 18 ft apart on centers with 60-deg saddle support. Working pressure is 150 psi.

Load factor (Table 1–17),

$$L_f = 0.29 \times 1.55 = 0.45$$

Ring test load equivalent,

$$w = \frac{2.5(177 + 196)}{0.45} = 2{,}071 \text{ lb/ft}$$

Internal pressure (Table 1–5),

$$p = 588 \text{ psi}$$

Using the above values of w and p in the nomogram, Fig. 1–1, the net thickness is determined to be 0.49 in. Adding 0.08 in. corrosion allowance and 0.08 in. casting tolerance, the total calculated thickness is determined to be 0.65 in.

b. Calculate the thickness of 16-in. cast-iron pipe, 18/40 iron strength, installed underground on piers spaced 18 ft apart on centers with 120-deg saddle support, with 5-ft cover. Working pressure is 150 psi.

Case 1:

Load factor (Table 1–17),

$$L_f = 0.24 \times 2.13 = 0.51$$

Ring test load equivalent,

$$w = \frac{2.5 \times 1470}{0.51} = 7{,}206 \text{ lb/ft}$$

Internal pressure (Table 1–5),

$$p = 625 \text{ psi}$$

Using the above values of w and p in the nomogram, Fig. 1–1, the net thickness is determined to be 0.57 in.

Case 2:

Ring test load equivalent,

$$w = \frac{2.5(1{,}470 + 590)}{0.51} = 10{,}980 \text{ lb/ft}$$

Internal pressure (Table 1–5),

$$p = 375 \text{ psi}$$

Using the above values of w and p in the nomogram, Fig. 1–2, the net thickness is determined to be 0.65 in.

Case 2 gives the larger computed thickness, 0.65 in., which is selected as the net thickness. Adding 0.08 in. corrosion allowance and 0.08 in. casting tolerance, the total calculated thickness is determined to be 0.81 in.

Sec. 1–4.5—Calculation of Beam Stress and Deflection

For small-diameter pipe, generally 3 in. through 8 in., a check of the beam stress may be required. If the calculated beam stress exceeds 14,000 psi, the thickness is increased or the span between supports is decreased to limit the beam stress to 14,000 psi. In

abled the manufacturers to furnish pipe with greater strength, and pipe with 21/45 iron strength has been furnished for many years. Thus, for the convenience of users, tables and figures in the standard cover pipe with iron strengths of both 18/40 and 21/45.

3. *Laying conditions.* Laying Conditions C, D, and E (also called "field conditions" in the 1957 revision) have been deleted. Conditions C and D were for pipe laid on blocks, a method which sometimes was used in the 1920's and 1930's. This method has been recognized as undesirable and is seldom used today. Condition E was for pipe laid with special bedding but without tamping the backfill. It was felt that this combination would rarely be used today; when special bedding is used, the backfill is almost always tamped, giving Laying Condition F, which is retained in this revision.

4. *Earth loads.* Formulas and procedures have been added (Sec. 1–3) for determining earth loads for standard and special conditions. Earth loads shown in Table 1–8 are the same as those given in the 1957 revision except that loads for 20 and 24 ft of cover have been added.

5. *Allowance for truck superloads.* Formulas and procedures have been added (Sec. 1–3) for determining truck superloads for standard and special conditions. These procedures may be used to compute truck superloads for unpaved roads, flexible pavement or rigid pavement, one truck or two passing trucks, and any wheel load and impact factor, including AASHO truck loadings. Truck superloads for standard conditions are shown in Table 1–8 and are the same as given in the 1957 revision except that loads for 20 and 24 ft of cover have been added.

6. *Allowance for surge pressure.* The allowances for surge pressure (water hammer), shown in Table 1–10, are unchanged from those given in the 1957 revision.

7. *Allowance for corrosion.* A standard allowance for soil corrosion of 0.08-in., based on judgment and experience of early engineers, was used in the 1939 manual and continued in the 1957 revision. The allowance of 0.08-in. is also retained in this edition. It is very conservative for many soils, and has proved to be adequate in most soils. In areas suspected or known to be highly corrosive, however, the designer should take special precautions. Such precautions include, but are not limited to, greater allowance for corrosion and improvement of trench conditions. Where unusually corrosive soil conditions are anticipated, a soil survey is recommended.

8. *Pipe on piers.* A new section (Sec. 1–4) has been added to provide procedures for computing thicknesses of pipe installed on piers or piling, a condition which is sometimes encountered in laying pipe in unstable soil, across streams or swamps, either aboveground or underground, and in installing pipe on bridges and other aboveground structures.

References

1. Wiggin, T. H.; Enger, M. L.; & Schlick, W. J. A Proposed New Method for Determining Barrel Thickness of Cast-Iron Pipe. *Jour. AWWA*, 31:841 (May 1939).

2. Moore, W. D. Discussion of the New Law of Design of Cast-Iron Pipe. *Jour. AWWA*, 31:1655 (Oct. 1939).
3. Schlick, W. J. Supporting Strength of Cast-Iron Pipe for Water and Gas. *Iowa State College Eng. Exp. Sta. Bul.* 146 (1940).
4. Marston, Anson. The Theory of External Loads on Closed Conduits in the Light of the Latest Experiments. *Iowa State College Eng. Exp. Sta. Bul.* 96 (1930).
5. Schlick, W. J. Loads on Pipe in Wide Ditches. *Iowa State College Eng. Exp. Sta. Bul.* 108 (1932).
6. Spangler, M. G. The Supporting Strength of Rigid Pipe Culverts. *Iowa State College Eng. Exp. Sta. Bul.* 112 (1933).
7. Spangler, M. G. & Schlick, W. J. Negative Projecting Conduits. *Iowa State College Eng. Report* No. 14 (1952–53).
8. Spangler, M. G., et al. Experimental Determination of Static and Impact Loads Transmitted to Culverts. *Iowa State College Eng. Exp. Sta. Bul.* 79 (1926).
9. Schlick, W. J. & Moore, B. A. Strength and Elastic Properties of Cast-Iron. *Iowa State College Eng. Exp. Sta. Bul.* 127 (1936).
10. Spangler, M. G. *Soil Engineering.* International Textbook Co., Scranton, Pa. (2nd ed., 1960).
11. Vertical Pressure on Culverts Under Wheel Loads on Concrete Pavement Slabs, Bul. ST 65, Portland Cement Assn., Chicago, Ill. (1951).
12. *Standard Specifications for Highway Bridges.* American Association of State Highway Officials, Washington, D.C. (8th ed., 1961).

Committee Personnel

Subcommittee No. 1—Pipe, which developed this standard, had the following personnel at that time:

Chairman: J. Thompson Vann

Vice-Chairman: Edwin B. Cobb

User Members	*Producer Members*
Frank E. Dolson	Harry P. Hagedorn
Richmond C. Holcombe	Carl A. Henrikson
L. Neale Houston	Arthur Roberts Jr.
Robert C. Kauffman	Charles C. Salvage
George F. Keenan	Sidney P. Teague
Miles R. Suchomel	
William J. Towner	

Standards Committee A21—Cast-Iron Pipe and Fittings, which reviewed and approved this standard, had the following personnel at the time of approval.

Chairman: Kenneth W. Henderson

Vice-Chairman: J. Thompson Vann

Secretary: James B. Ramsey

Sec. 1–4—Thickness Determination for Pipe on Piers or Piling Aboveground or Underground

Sec. 1–4.1—Scope

This section gives the procedures for determining the net thickness of cast-iron pipe supported at intervals rather than continuously. These procedures are applicable to pipe installed on piling bents and piers, with or without earth cover, as well as to pipe installed on bridges and other structures with hangers and other types of spaced supports.

Sec. 1–4.2—Pipe Installed Aboveground Without Earth Cover

a. Determine the ring test load equivalent of external load, including 2.5 safety factor, as follows:

$$w = \frac{2.5(W_p + W_w)}{L_f} \qquad (17)$$

in which:

w = ring test load equivalent (lb/ft)
W_p = weight of pipe (lb/ft) (see Table 1–16)
W_w = weight of contained water (lb/ft) (see Table 1–16)
L_f = load factor (see Table 1–17)

b. Select the internal pressure for Case 1 from Table 1–5 which includes surge pressure and 2.5 safety factor.

c. Enter the above values of ring test load equivalent and internal pressure in the appropriate nomogram and read the net thickness. To obtain total calculated thickness, corrosion allowance and casting tolerance are added to this net thickness as described in Sec. 1–2.2.

Sec. 1–4.3—Pipe Installed Underground With Earth Cover

Thicknesses are computed for two cases as described in Sec. 1–2.2 and the larger of the two thicknesses is used for design.

Case 1:

a. Determine the ring test load equivalent from the following formula:

$$w = \frac{2.5W_e}{L_f} \qquad (18)$$

in which:

w = ring test load equivalent (lb/ft)
W_e = earth load (see Table 1–8)
L_f = load factor (see Table 1–17)

b. Select the internal pressure for Case 1 from Table 1–5 which includes surge pressure and 2.5 safety factor.

c. Enter the above values of ring test load equivalent and internal pressure in the appropriate nomogram and read the net thickness.

Case 2:

a. Determine the ring test load equivalent from the following formula:

$$w = \frac{2.5\,(W_e + W_t)}{L_f} \qquad (19)$$

in which W_t is the truck superload in pounds per foot (see Table 1–8) and other factors are as defined for Eq 18.

b. Select the internal pressure for Case 2 from Table 1–5 which includes a safety factor of 2.5.

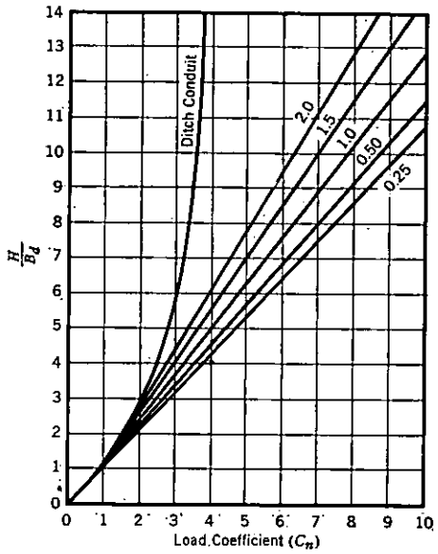

Fig. 1-14. Calculation Coefficients (C_n) for Negative-Projection Conditions

The values associated with the five curves to the right are for p′. $K\mu'$ *equals 0.130,* $r_{sd}p$ *equals 0.0.*

Organization Represented	*Representative*
American Gas Association	Richmond C. Holcombe
American Society of Civil Engineers	Kenneth W. Henderson
American Society of Mechanical Engineers	Louis R. Howson
American Society for Testing & Materials	Harry P. Hagedorn
American Water Works Association	Vance C. Lischer
Cast Iron Pipe Research Association	Wallace T. Miller
	Edward C. Sears
	Herbert W. Stuart
	J. Thompson Vann
Individual Producers	Richard T. VerHalen
	William T. Maher
Manufacturers' Standardization Society of the Valve and Fittings Industry	Charles W. Wright
New England Water Works Association	Edwin B. Cobb
Standardization Division—General Services Administration	Robert E. Lyons
Member at Large	Miles R. Suchomel
Canadian Standards Association	Robert C. Shnay *

* Liaison representative without vote.

CONTENTS

Sec. 1-1—Thickness Tables for Standard Conditions

Section — Page
1-1.1—General 1
1-1.2—Trench Load and Internal Pressure 1
1-1.3—Traffic Superload and Surge Pressure 2
1-1.4—Corrosion Allowance and Casting Tolerance 2

Table
1-1—Schedule of Barrel Thickness for Water Pipe of 18/40 Iron Strength 3
1-2—Schedule of Barrel Thickness for Water Pipe of 21/45 Iron Strength 18
1-3—Schedule of Barrel Thickness for Gas Pipe of 18/40 Iron Strength 33

Sec. 1-2—General Procedure for Thickness Determination

Section
1-2.1—Scope 45
1-2.2—Procedure for Thickness Determination 45
1-2.3—Example for Determining Thickness of 18-in. Water Pipe 46

Table
1-4—Ring Test Load Equivalents (w) of Trench Loads—lb/lin ft 47
1-5—Internal Pressure (p) 49
1-6—Allowances for Casting Tolerance 49
1-7—Standard Thickness Classes of Cast-Iron Pipe 50

Figure
1-1—Thickness Nomogram for Pipe of 18/40 Iron Strength, Low-Range Load 50
1-2—Thickness Nomogram for Pipe of 18/40 Iron Strength, High-Range Load 51
1-3—Thickness Nomogram for Pipe of 21/45 Iron Strength, Low-Range Load 52
1-4—Thickness Nomogram for Pipe of 21/45 Iron Strength, Medium-Range Load 53
1-5—Thickness Nomogram for Pipe of 21/45 Iron Strength, High-Range Load 54

Sec. 1-3—Design Theory—Determination of Net Thickness, Earth Load, and Truck Superload

SECTION PAGE

1-3.1—Determination of Net Thickness 55
1-3.2—Earth Loads (W_e) 57
1-3.3—Truck Superloads (W_t) 60

TABLE

1-8 —Earth Loads (W_e) and Truck Superloads (W_t) in Pounds per Linear Foot 62
1-9 —Load Factors for Cast-Iron Pipe in Ditch and Embankment Conditions 63
1-10—Allowances for Surge Pressure .. 63
1-11—Surface Load Factors (C) for One Truck on Unpaved Road or Flexible Pavement 64
1-12—Surface Load Factors (C) for Two Passing Trucks on Unpaved Road or Flexible Pavement 65
1-13—Reduction Factors (R) 66
1-14—Surface Load Factors (K) for One Truck and Two Passing Trucks on Rigid Pavement ... 66
1-15—Outside Diameters of Cast-Iron Pipe 67

FIGURE

1-6 —Load-Pressure Curve 67
1-7 —Installation Conditions for Earth Load Calculations 68

FIGURE PAGE

1-8 —Calculation Coefficients (C_d) for Ditch Condition 68
1-9 —Calculation Coefficients (C_e) for Positive-Projection Condition . 69
1-10—Earth Loads on Pipe for Trench Width ($d+2$) ft 70
1-11—Earth Loads on Pipe for Trench Width ($d+1$) ft 71
1-12—Earth Loads on Pipe in Trench With 1:1 Side Slopes 72
1-13—Earth Loads on Pipe in Trench With 2:1 Side Slopes 73
1-14—Calculation Coefficients (C_n) for Negative Projection Condition 74

Sec. 1-4—Thickness Determination for Pipe on Piers or Piling Aboveground or Underground

SECTION

1-4.1—Scope 75
1-4.2—Pipe Installed Aboveground Without Earth Cover 75
1-4.3—Pipe Installed Underground With Earth Cover 75
1-4.4—Design Examples 76
1-4.5—Calculation of Beam Stress and Deflection 76

TABLE PAGE

1-16—Weights of Pipe and Contained Water for Design of Aboveground Pipe 77
1-17—Load Factors for Pipe on Spaced Supports Aboveground and Underground 78

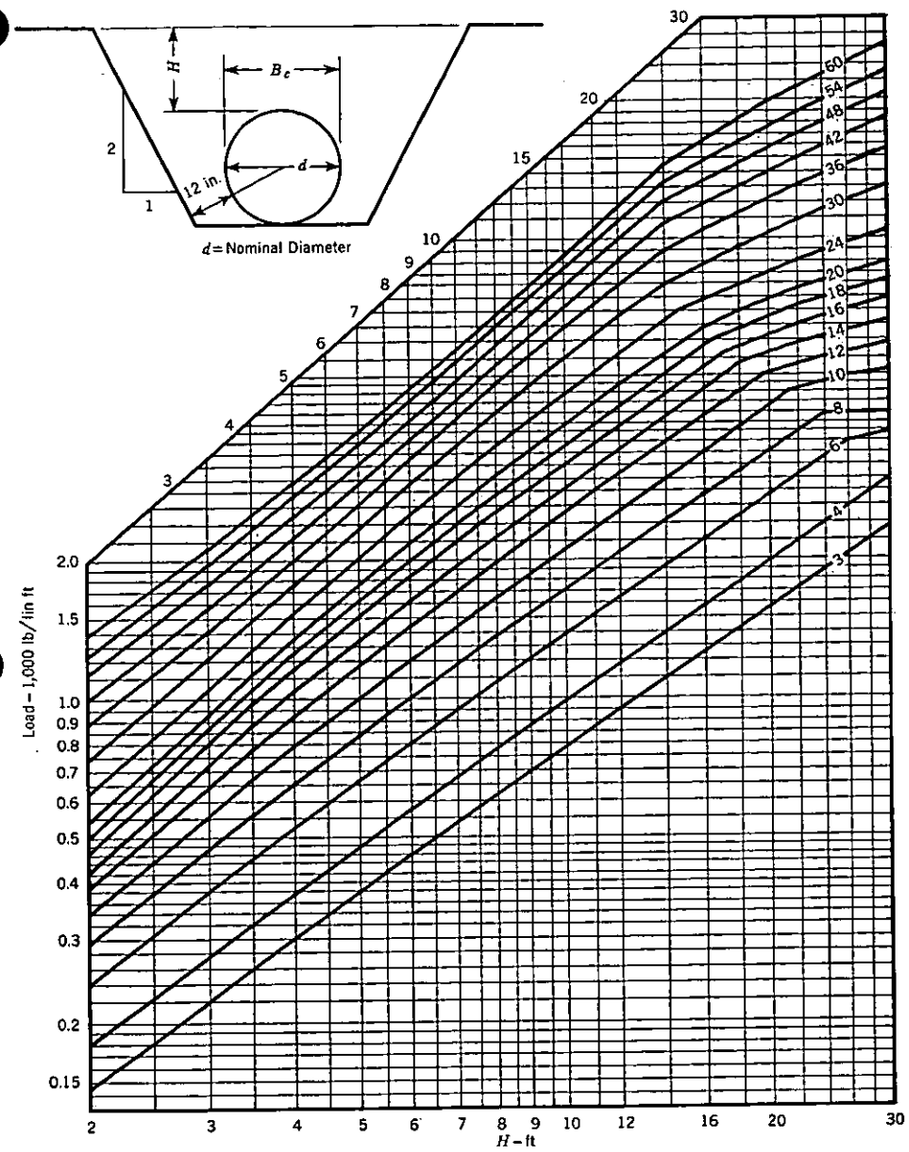

Fig. 1-13. Earth Loads on Pipe in Trench With 2:1 Side Slopes

Values associated with each curve are for pipe size, in inches. It is assumed that the unit weight of fill is 120 lb/cu ft. For wide ditches, $r_{sd}p$ equals 0.75. $K\mu$ equals 0.1924, $K\mu'$ equals 0.130. B_c is pipe OD. For 3- and 8-60-in. pipe, OD is as shown in Table 1-15. OD of 4- and 6-in. pipe is 5.00 and 7.10 in., respectively.

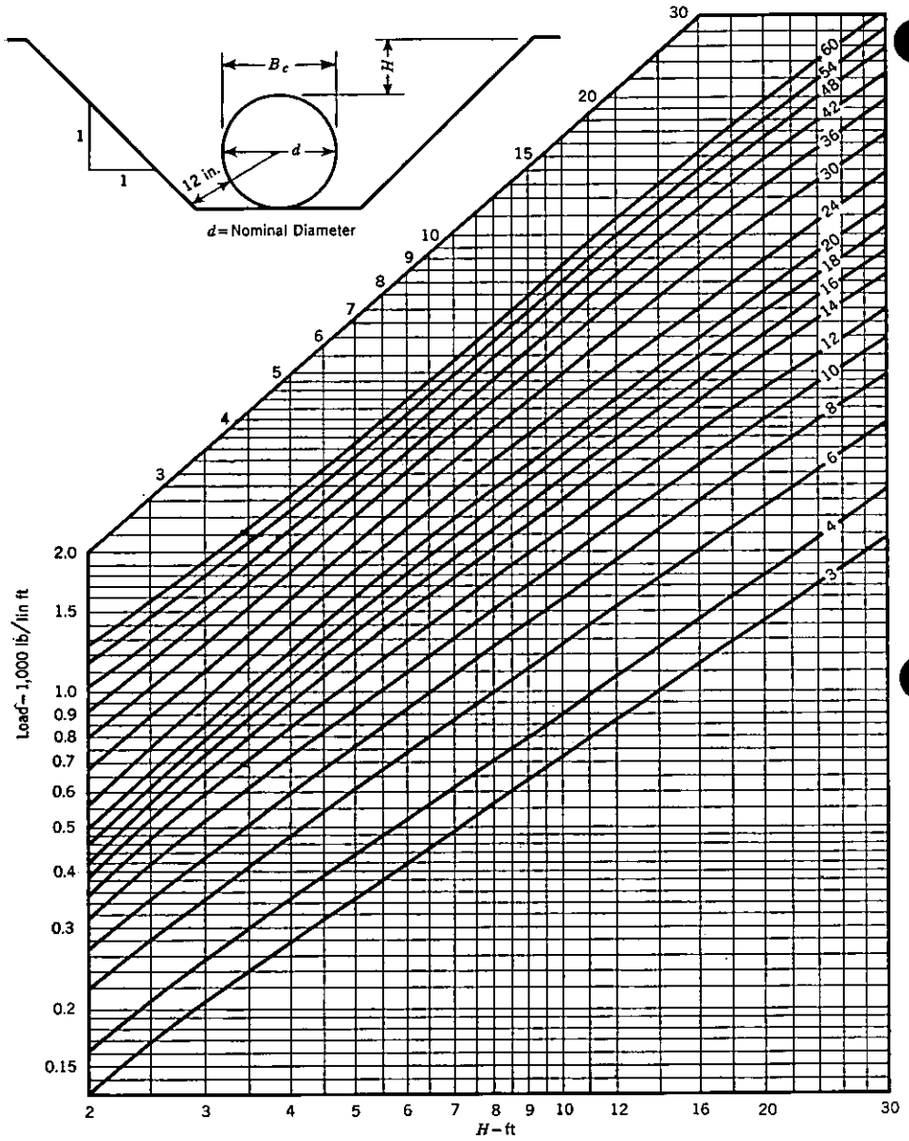

Fig. 1–12. Earth Loads on Pipe in Trench With 1 : 1 Side Slopes

Values associated with each curve are for pipe size, in inches. It is assumed that the unit weight of fill is 110 lb/cu ft; this load may be adjusted to soil of 120 lb/cu ft by multiplying the graph load by 120/110. For wide ditches, $r_{sd}p$ *is 0.75.* $K\mu$ *equals 0.1924,* $K\mu'$ *equals 0.130.* B_c *is pipe OD. For 3- and 8–60-in. pipe, OD is as shown in Table 1–15. OD of 4- and 6-in. pipe is 5.00 and 7.10 in., respectively.*

USA Standard

for

Thickness Design of Cast-Iron Pipe

Sec. 1–1—Thickness Tables for Standard Conditions

Sec. 1–1.1—General

Tables 1–1, 1–2 and 1–3, as applicable, permit the direct determination of the required thickness of cast-iron pipe limited to the following conditions:

a. Vertical-sided trench of width at top of pipe not greater than the nominal pipe diameter plus 2 ft

b. Unit weight of soil 120 lb/cu ft

c. $K\mu = 0.1924$, $K\mu' = 0.130$ (See *Sec.* 1–3.2 for definition)

d. Truck superload based on two passing trucks with adjacent wheels 3 ft apart, 9,000 lb wheel load, unpaved road or flexible pavement, 1.50 impact factor

e. Surge allowances as shown in Table 1–10

f. Iron strengths of 18/40 and 21/45 *

g. The three most common laying conditions:

A—Pipe laid on flat-bottom trench, backfill not tamped

B—Pipe laid on flat-bottom trench, backfill tamped

F—Pipe bedded in gravel or sand, backfill tamped

h. Allowances for casting tolerance as shown in Table 1–6

i. A corrosion allowance of 0.08 in.

* The first figure designates the bursting tensile strength (S) in units of 1,000 psi and the second figure designates the ring modulus of rupture (R) in units of 1,000 psi.

Sec. 1–1.2—Trench Load and Internal Pressure

The required thickness of cast-iron pressure pipe is determined from a consideration of trench load and internal pressure in combination. Trench load is considered to consist of the earth load on the pipe plus any superload resulting from traffic over the trench. Internal pressure is considered to consist of the design working pressure plus an additional allowance for surge pressure. Two different combinations of trench load and internal pressure are considered in the design:

Case 1. Trench load (earth load but no truck superload) in combination with internal pressure (working pressure plus surge pressure) and with 2.5 factor of safety applied to both trench load and internal pressure

Case 2. Trench load (earth load plus truck superload) in combination with internal pressure (working pressure but no surge pressure) and with

a 2.5 factor of safety applied to both trench load and internal pressure.

Sec. 1–1.3—Traffic Superload and Surge Pressure

In designing water pipe it is customary to assume that neither traffic superload nor surge pressure will occur in important magnitude simultaneously. Thus, calculations for the required thickness of water pipe are made for both conditions independently, and the greater of the two thicknesses thus determined is chosen as the net thickness.

In designing gas pipe the procedure is the same, except that surge pressure is not a factor and only Case 2 is considered.

Sec. 1–1.4—Corrosion Allowance and Casting Tolerance

To the net thickness determined as explained above, a corrosion allowance and a casting tolerance are added to obtain the calculated thickness shown in Tables 1–1, 1–2, and 1–3. The standard thickness class and/or the nominal thickness for this class shown in Tables 1–1, 1–2, and 1–3 are used for specifying and ordering pipe.

For other than standard conditions the formulas, tables, and diagrams in Sec. 1–2 may be used. The design theory on which Tables 1–1, 1–2, and 1–3 are based is presented in Sec. 1–3. Procedures for determining the net thickness of pipe on piers or piling above- or belowground are presented in Sec. 1–4.

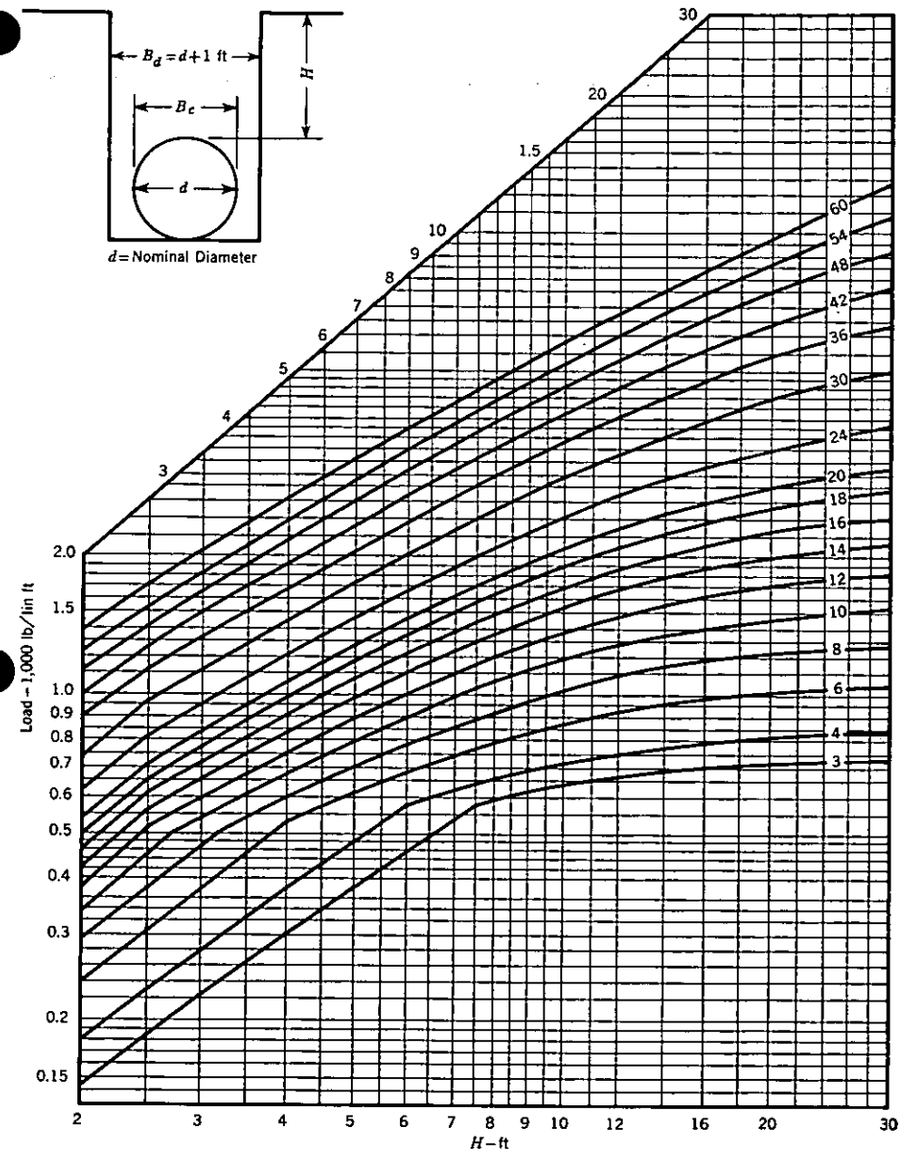

Fig. 1–11. Earth Loads on Pipe for Trench Width of $(d + 1)$ ft

Values associated with each curve are for pipe size, in inches. It is assumed that the unit weight of fill is 120 lb/cu ft, that $K\mu$ equals 0.1924 and $K\mu'$ equals 0.130. For wide ditches, $r_{sd}p$ is 0.75. B_c is pipe OD. For 3- and 8–60-in. pipe, OD is as shown in Table 1–15. OD of 4- and 6-in. pipe is 5.00 and 7.10 in., respectively.

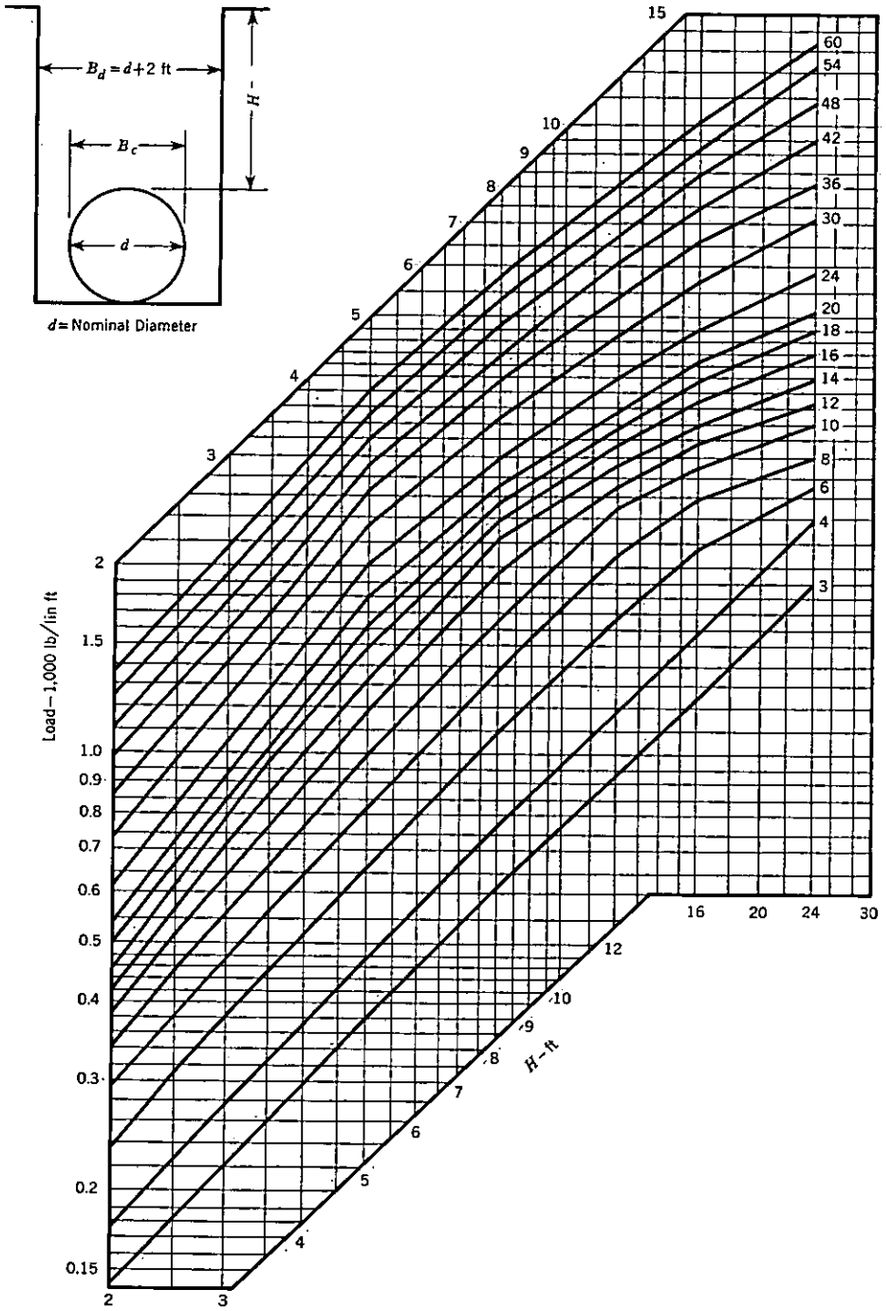

Fig. 1-10. Earth Loads on Pipe for Trench Width of $(d + 2)$ ft

Values associated with each curve are for pipe size, in inches. It is assumed that the unit weight of fill is 120 lb/cu ft, that $K\mu$ equals 0.1924 and $K\mu'$ equals 0.130, and that $r_{sd}p$ is 0.75 for all sizes. B_c is pipe OD. For 3- and 8–60-in. pipe, OD is as shown in Table 1–15. OD of 4- and 6-in. pipe is 5.00 and 7.10 in., respectively.

TABLE 1-1

Schedule of Barrel Thickness for Water Pipe of 18/40 Iron Strength

Laying Condition	Depth of Cover *ft*	Thickness Specifications	Internal Pressure—*psi* 50	100	150	200	250	300	350
			Barrel Thicknesses—*in.*						
Three-Inch Water Pipe									
A	2½	Calculated Thickness	.21*	.21*	.22*	.22*	.22*	.22*	.23*
		Use Thickness Class	22	22	22	22	22	22	22
		Use Thickness	.32	.32	.32	.32	.32	.32	.32
	3½	Calculated Thickness	.21*	.21*	.22*	.22*	.22*	.22*	.23*
		Use Thickness Class	22	22	22	22	22	22	22
		Use Thickness	.32	.32	.32	.32	.32	.32	.32
	5	Calculated Thickness	.21*	.21*	.22*	.22*	.23	.23	.24
		Use Thickness Class	22	22	22	22	22	22	22
		Use Thickness	.32	.32	.32	.32	.32	.32	.32
	8	Calculated Thickness	.22*	.23*	.23*	.24	.24	.24	.25
		Use Thickness Class	22	22	22	22	22	22	22
		Use Thickness	.32	.32	.32	.32	.32	.32	.32
	12	Calculated Thickness	.24*	.25*	.25*	.26	.26	.27	.28
		Use Thickness Class	22	22	22	22	22	22	22
		Use Thickness	.32	.32	.32	.32	.32	.32	.32
	16	Calculated Thickness	.27	.27	.28	.28	.28	.29	.29
		Use Thickness Class	22	22	22	22	22	22	22
		Use Thickness	.32	.32	.32	.32	.32	.32	.32
B	2½	Calculated Thickness	.21*	.21*	.22*	.22*	.22*	.22*	.23*
		Use Thickness Class	22	22	22	22	22	22	22
		Use Thickness	.32	.32	.32	.32	.32	.32	.32
	3½	Calculated Thickness	.21*	.21*	.22*	.22*	.22*	.22*	.23*
		Use Thickness Class	22	22	22	22	22	22	22
		Use Thickness	.32	.32	.32	.32	.32	.32	.32
	5	Calculated Thickness	.21*	.21*	.22*	.22*	.23	.23	.24
		Use Thickness Class	22	22	22	22	22	22	22
		Use Thickness	.32	.32	.32	.32	.32	.32	.32
	8	Calculated Thickness	.22*	.22*	.23*	.23*	.24	.24	.24
		Use Thickness Class	22	22	22	22	22	22	22
		Use Thickness	.32	.32	.32	.32	.32	.32	.32
	12	Calculated Thickness	.24*	.24*	.25	.25	.26	.26	.27
		Use Thickness Class	22	22	22	22	22	22	22
		Use Thickness	.32	.32	.32	.32	.32	.32	.32
	16	Calculated Thickness	.26	.26	.27	.27	.28	.28	.29
		Use Thickness Class	22	22	22	22	22	22	22
		Use Thickness	.32	.32	.32	.32	.32	.32	.32
F	2½	Calculated Thickness	.21*	.21*	.21*	.21*	.22*	.22*	.23
		Use Thickness Class	22	22	22	22	22	22	22
		Use Thickness	.32	.32	.32	.32	.32	.32	.32
	3½	Calculated Thickness	.21*	.21*	.21*	.21*	.22*	.22*	.23
		Use Thickness Class	22	22	22	22	22	22	22
		Use Thickness	.32	.32	.32	.32	.32	.32	.32
	5	Calculated Thickness	.21*	.21*	.21*	.22*	.22*	.22*	.23
		Use Thickness Class	22	22	22	22	22	22	22
		Use Thickness	.32	.32	.32	.32	.32	.32	.32
	8	Calculated Thickness	.21	.21	.22	.22	.23	.23	.24
		Use Thickness Class	22	22	22	22	22	22	22
		Use Thickness	.32	.32	.32	.32	.32	.32	.32
	12	Calculated Thickness	.23	.23	.23	.24	.24	.24	.25
		Use Thickness Class	22	22	22	22	22	22	22
		Use Thickness	.32	.32	.32	.32	.32	.32	.32
	16	Calculated Thickness	.24	.24	.25	.25	.26	.26	.27
		Use Thickness Class	22	22	22	22	22	22	22
		Use Thickness	.32	.32	.32	.32	.32	.32	.32

* Asterisk following total calculated thickness indicates that truck superload (Case 2) is the controlling factor. When total calculated thickness is not followed by asterisk, surge pressure (Case 1) is the controlling factor. See Sec. 1-2.1.

TABLE 1-1 (*Continued*)

Schedule of Barrel Thickness for Water Pipe of 18/40 Iron Strength

Laying Condition	Depth of Cover *ft*	Thickness Specifications	Internal Pressure—*psi* 50	100	150	200	250	300	350
			Barrel Thicknesses—*in.*						
Four-Inch Water Pipe									
A	2½	Calculated Thickness	.23*	.23*	.24*	.24*	.24*	.25*	.27
		Use Thickness Class	22	22	22	22	22	22	22
		Use Thickness	.35	.35	.35	.35	.35	.35	.35
	3½	Calculated Thickness	.23*	.23*	.23*	.24	.24	.25	.27
		Use Thickness Class	22	22	22	22	22	22	22
		Use Thickness	.35	.35	.35	.35	.35	.35	.35
	5	Calculated Thickness	.23*	.24*	.24*	.25	.26	.27	.28
		Use Thickness Class	22	22	22	22	22	22	22
		Use Thickness	.35	.35	.35	.35	.35	.35	.35
	8	Calculated Thickness	.25*	.26	.27	.28	.28	.29	.30
		Use Thickness Class	22	22	22	22	22	22	22
		Use Thickness	.35	.35	.35	.35	.35	.35	.35
	12	Calculated Thickness	.29	.29	.30	.30	.31	.31	.32
		Use Thickness Class	22	22	22	22	22	22	22
		Use Thickness	.35	.35	.35	.35	.35	.35	.35
	16	Calculated Thickness	.31	.31	.32	.32	.33	.33	.34
		Use Thickness Class	22	22	22	22	22	22	22
		Use Thickness	.35	.35	.35	.35	.35	.35	.35
B	2½	Calculated Thickness	.23*	.23*	.23*	.23*	.24*	.25	.27
		Use Thickness Class	22	22	22	22	22	22	22
		Use Thickness	.35	.35	.35	.35	.35	.35	.35
	3½	Calculated Thickness	.23*	.23*	.23*	.24	.25	.26	.27
		Use Thickness Class	22	22	22	22	22	22	22
		Use Thickness	.35	.35	.35	.35	.35	.35	.35
	5	Calculated Thickness	.23	.24	.24	.25	.26	.27	.28
		Use Thickness Class	22	22	22	22	22	22	22
		Use Thickness	.35	.35	.35	.35	.35	.35	.35
	8	Calculated Thickness	.25	.26	.27	.27	.28	.29	.29
		Use Thickness Class	22	22	22	22	22	22	22
		Use Thickness	.35	.35	.35	.35	.35	.35	.35
	12	Calculated Thickness	.28	.28	.29	.30	.30	.31	.32
		Use Thickness Class	22	22	22	22	22	22	22
		Use Thickness	.35	.35	.35	.35	.35	.35	.35
	16	Calculated Thickness	.30	.31	.31	.32	.32	.33	.33
		Use Thickness Class	22	22	22	22	22	22	22
		Use Thickness	.35	.35	.35	.35	.35	.35	.35
F	2½	Calculated Thickness	.23*	.23*	.23*	.24*	.24	.25	.26
		Use Thickness Class	22	22	22	22	22	22	22
		Use Thickness	.35	.35	.35	.35	.35	.35	.35
	3½	Calculated Thickness	.23*	.23*	.23	.24	.24	.25	.26
		Use Thickness Class	22	22	22	22	22	22	22
		Use Thickness	.35	.35	.35	.35	.35	.35	.35
	5	Calculated Thickness	.23	.23	.23	.24	.24	.25	.26
		Use Thickness Class	22	22	22	22	22	22	22
		Use Thickness	.35	.35	.35	.35	.35	.35	.35
	8	Calculated Thickness	.24	.24	.25	.25	.25	.26	.27
		Use Thickness Class	22	22	22	22	22	22	22
		Use Thickness	.35	.35	.35	.35	.35	.35	.35
	12	Calculated Thickness	.25	.26	.27	.28	.28	.29	.30
		Use Thickness Class	22	22	22	22	22	22	22
		Use Thickness	.35	.35	.35	.35	.35	.35	.35
	16	Calculated Thickness	.28	.28	.29	.29	.30	.30	.31
		Use Thickness Class	22	22	22	22	22	22	22
		Use Thickness	.35	.35	.35	.35	.35	.35	.35

* Asterisk following total calculated thickness indicates that truck superload (Case 2) is the controlling factor. When total calculated thickness is not followed by asterisk, surge pressure (Case 1) is the controlling factor. See Sec. 1-2.1.

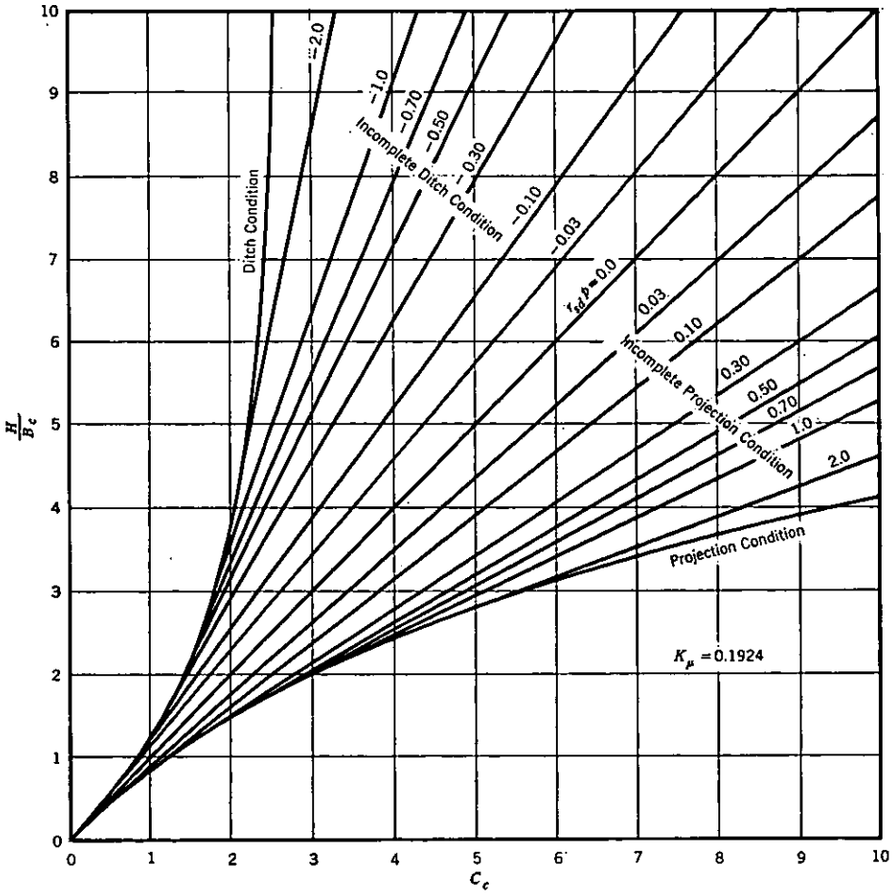

Fig. 1-9. Calculation Coefficients (C_c) for Positive-Projection Condition

The values of C_c may also be determined by Eq 11 or Eq 12, given in the text.

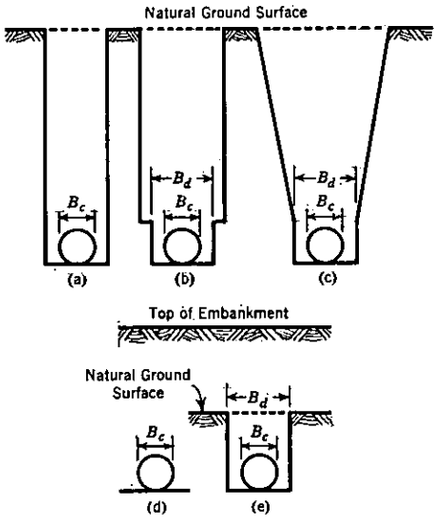

Fig. 1–7. Installation Conditions for Earth Load Calculations

Fig. 1–7(a)–(c) are for ditch conditions; Fig. 1–7(d) and (e) are for positive and negative projection embankment conditions, respectively.

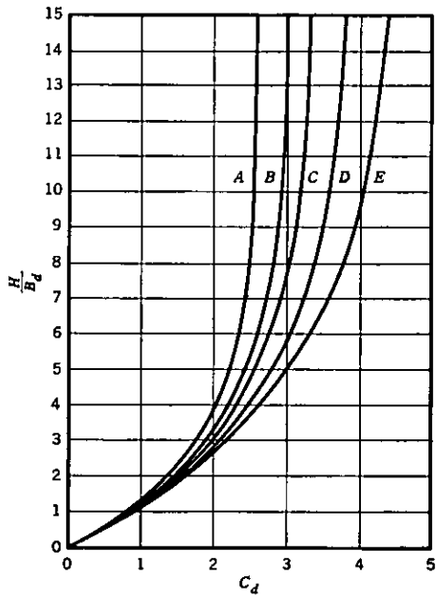

Fig. 1–8. Calculation Coefficients (C_d) for Ditch Condition

Curve A is for C_d for $K\mu$ and $K\mu'$ of 0.1924, the minimum for granular materials without cohesion; Curve B, C_d for $K\mu$ and $K\mu'$ of 0.165, the maximum for sand and gravel; Curve C, C_d for $K\mu$ and $K\mu'$ of 0.150, the maximum for saturated topsoil; Curve D, C_d for $K\mu$ and $K\mu'$ of 0.130, the ordinary maximum for clay; and Curve E, C_d for $K\mu$ and $K\mu'$ of 0.110, the maximum for saturated clay.

TABLE 1–1 (*Continued*)

Schedule of Barrel Thickness for Water Pipe of 18/40 Iron Strength

Laying Condition	Depth of Cover *ft*	Thickness Specifications	Internal Pressure—*psi* 50	100	150	200	250	300	350
			Barrel Thicknesses—*in.*						
Six-Inch Water Pipe									
A	2½	Calculated Thickness	.26*	.29*	.30*	.31*	.32*	.33*	.34
		Use Thickness Class	22	22	22	22	22	22	22
		Use Thickness	.38	.38	.38	.38	.38	.38	.38
	3½	Calculated Thickness	.28*	.28*	.29*	.30*	.31*	.32*	.34
		Use Thickness Class	22	22	22	22	22	22	22
		Use Thickness	.38	.38	.38	.38	.38	.38	.38
	5	Calculated Thickness	.29*	.29*	.30*	.31*	.33	.34	.35
		Use Thickness Class	22	22	22	22	22	22	22
		Use Thickness	.38	.38	.38	.38	.38	.38	.38
	8	Calculated Thickness	.32	.33	.34	.35	.36	.37	.38
		Use Thickness Class	22	22	22	22	22	22	22
		Use Thickness	.38	.38	.38	.38	.38	.38	.38
	12	Calculated Thickness	.36	.37	.38	.38	.39	.40	.41
		Use Thickness Class	22	22	22	22	22	23	23
		Use Thickness	.38	.38	.38	.38	.38	.41	.41
	16	Calculated Thickness	.39	.40	.41	.42	.42	.43	.44
		Use Thickness Class	22	23	23	23	23	24	24
		Use Thickness	.38	.41	.41	.41	.41	.44	.44
B	2½	Calculated Thickness	.28*	.28*	.29*	.30*	.31*	.32*	.33*
		Use Thickness Class	22	22	22	22	22	22	22
		Use Thickness	.38	.38	.38	.38	.38	.38	.38
	3½	Calculated Thickness	.27*	.28*	.28*	.29*	.30*	.32	.34
		Use Thickness Class	22	22	22	22	22	22	22
		Use Thickness	.38	.38	.38	.38	.38	.38	.38
	5	Calculated Thickness	.28*	.29	.30	.31	.32	.33	.34
		Use Thickness Class	22	22	22	22	22	22	22
		Use Thickness	.38	.38	.38	.38	.38	.38	.38
	8	Calculated Thickness	.31	.32	.33	.34	.35	.36	.37
		Use Thickness Class	22	22	22	22	22	22	22
		Use Thickness	.38	.38	.38	.38	.38	.38	.38
	12	Calculated Thickness	.35	.35	.36	.37	.38	.39	.40
		Use Thickness Class	22	22	22	22	22	22	23
		Use Thickness	.38	.38	.38	.38	.38	.38	.41
	16	Calculated Thickness	.38	.38	.39	.40	.41	.42	.43
		Use Thickness Class	22	22	22	23	23	23	24
		Use Thickness	.38	.38	.38	.41	.41	.41	.44
F	2½	Calculated Thickness	.26*	.27*	.28	.29	.30	.32	.34
		Use Thickness Class	22	22	22	22	22	22	22
		Use Thickness	.38	.38	.38	.38	.38	.38	.38
	3½	Calculated Thickness	.27	.27	.28	.29	.30	.32	.34
		Use Thickness Class	22	22	22	22	22	22	22
		Use Thickness	.38	.38	.38	.38	.38	.38	.38
	5	Calculated Thickness	.28	.28	.29	.29	.30	.32	.35
		Use Thickness Class	22	22	22	22	22	22	22
		Use Thickness	.38	.38	.38	.38	.38	.38	.38
	8	Calculated Thickness	.29	.30	.31	.32	.33	.34	.35
		Use Thickness Class	22	22	22	22	22	22	22
		Use Thickness	.38	.38	.38	.38	.38	.38	.38
	12	Calculated Thickness	.32	.33	.34	.35	.36	.37	.38
		Use Thickness Class	22	22	22	22	22	22	22
		Use Thickness	.38	.38	.38	.38	.38	.38	.38
	16	Calculated Thickness	.35	.35	.36	.37	.38	.39	.40
		Use Thickness Class	22	22	22	22	22	22	23
		Use Thickness	.38	.38	.38	.38	.38	.38	.41

* Asterisk following total calculated thickness indicates that truck superload (Case 2) is the controlling factor. When total calculated thickness is not followed by asterisk, surge pressure (Case 1) is the controlling factor. See Sec. 1–2.1.

TABLE 1-1 (*Continued*)

Schedule of Barrel Thickness for Water Pipe of 18/40 Iron Strength

Laying Condition	Depth of Cover *ft*	Thickness Specifications	Internal Pressure—*psi* 50	100	150	200	250	300	350
			Barrel Thicknesses—*in.*						
Eight-Inch Water Pipe									
A	2½	Calculated Thickness	.34*	.35*	.36*	.37*	.38*	.39*	.40*
		Use Thickness Class	22	22	22	22	22	22	22
		Use Thickness	.41	.41	.41	.41	.41	.41	.41
	3½	Calculated Thickness	.33*	.34*	.34*	.35*	.36*	.39	.41
		Use Thickness Class	22	22	22	22	22	22	22
		Use Thickness	.41	.41	.41	.41	.41	.41	.41
	5	Calculated Thickness	.34*	.35*	.36*	.37*	.39	.41	.43
		Use Thickness Class	22	22	22	22	22	22	23
		Use Thickness	.41	.41	.41	.41	.41	.41	.44
	8	Calculated Thickness	.38	.39	.40	.41	.43	.44	.46
		Use Thickness Class	22	22	22	22	23	23	24
		Use Thickness	.41	.41	.41	.41	.44	.44	.48
	12	Calculated Thickness	.43	.44	.45	.46	.47	.49	.50
		Use Thickness Class	23	23	23	24	24	24	25
		Use Thickness	.44	.44	.44	.48	.48	.48	.52
	16	Calculated Thickness	.46	.47	.48	.49	.51	.52	.53
		Use Thickness Class	24	24	24	24	25	25	25
		Use Thickness	.48	.48	.48	.48	.52	.52	.52
B	2½	Calculated Thickness	.32*	.33*	.34*	.35*	.36*	.38*	.39*
		Use Thickness Class	22	22	22	22	22	22	22
		Use Thickness	.41	.41	.41	.41	.41	.41	.41
	3½	Calculated Thickness	.32*	.33*	.33*	.34*	.36*	.38	.40
		Use Thickness Class	22	22	22	22	22	22	22
		Use Thickness	.41	.41	.41	.41	.41	.41	.41
	5	Calculated Thickness	.33*	.34*	.35	.36	.38	.40	.42
		Use Thickness Class	22	22	22	22	22	22	22
		Use Thickness	.41	.41	.41	.41	.41	.41	.41
	8	Calculated Thickness	.36	.37	.38	.40	.41	.43	.45
		Use Thickness Class	22	22	22	22	22	23	23
		Use Thickness	.41	.41	.41	.41	.41	.44	.44
	12	Calculated Thickness	.41	.42	.43	.44	.46	.47	.48
		Use Thickness Class	22	22	23	23	24	24	24
		Use Thickness	.41	.41	.44	.44	.48	.48	.48
	16	Calculated Thickness	.44	.45	.46	.47	.48	.50	.51
		Use Thickness Class	23	23	24	24	24	25	25
		Use Thickness	.44	.44	.48	.48	.48	.52	.52
F	2½	Calculated Thickness	.30*	.31*	.32*	.33*	.35	.37	.39
		Use Thickness Class	22	22	22	22	22	22	22
		Use Thickness	.41	.41	.41	.41	.41	.41	.41
	3½	Calculated Thickness	.29*	.30*	.31	.33	.35	.37	.39
		Use Thickness Class	22	22	22	22	22	22	22
		Use Thickness	.41	.41	.41	.41	.41	.41	.41
	5	Calculated Thickness	.30*	.31*	.32	.34	.36	.38	.40
		Use Thickness Class	22	22	22	22	22	22	22
		Use Thickness	.41	.41	.41	.41	.41	.41	.41
	8	Calculated Thickness	.34	.35	.36	.37	.39	.41	.43
		Use Thickness Class	22	22	22	22	22	22	23
		Use Thickness	.41	.41	.41	.41	.41	.41	.44
	12	Calculated Thickness	.38	.39	.40	.41	.43	.44	.46
		Use Thickness Class	22	22	22	22	23	23	24
		Use Thickness	.41	.41	.41	.41	.44	.44	.48
	16	Calculated Thickness	.40	.41	.42	.43	.45	.46	.48
		Use Thickness Class	22	22	22	23	23	24	24
		Use Thickness	.41	.41	.41	.44	.44	.48	.48

* Asterisk following total calculated thickness indicates that truck superload (Case 2) is the controlling factor. When total calculated thickness is not followed by asterisk, surge pressure (Case 1) is the controlling factor. See Sec. 1-2.1.

TABLE 1-15

Outside Diameters of Cast-Iron Pipe

Pipe Size *in.*	Outside Diameter *in.*	Outside Diameter (B_o) *ft*	Pipe Size *in.*	Outside Diameter *in.*	Outside Diameter (B_o) *ft*
3	3.96	0.330	20	21.60	1.800
4	4.80	0.400	24	25.80	2.150
6	6.90	0.575	30	32.00	2.667
8	9.05	0.754	36	38.30	3.192
10	11.10	0.925	42	44.50	3.708
12	13.20	1.100	48	50.80	4.233
14	15.30	1.275	54	57.10	4.758
16	17.40	1.450	60	63.40	5.283
18	19.50	1.625			

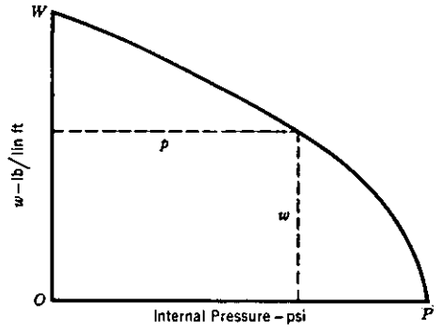

Fig. 1-6. Load-Pressure Curve

The parabola represents the relation between external load and internal pressure at the point of breaking.

TABLE 1-13

Reduction Factors (R)

Pipe Size *in.*	Depth of Cover—*ft*				Pipe Size *in.*	Depth of Cover—*ft*			
	2½–3½	4–7	8–10	>10		2½–3½	4–7	8–10	>10
	Reduction Factor					Reduction Factor			
3–12	1.00	1.00	1.00	1.00	20	0.83	0.90	0.95	1.00
14	0.92	1.00	1.00	1.00	24–30	0.81	0.85	0.95	1.00
16	0.88	0.95	1.00	1.00	36–60	0.80	0.85	0.90	1.00
18	0.85	0.90	1.00	1.00					

TABLE 1-14

Surface Load Factors (K) *For One Truck and Two Passing Trucks on Rigid Pavement**

Depth of Cover *ft*	One Truck				Two Passing Trucks			
	Pavement Thickness—*in.*				Pavement Thickness—*in.*			
	4	6	8	10	4	6	8	10
	Surface Load Factor							
2	0.0244	0.0149	0.0101	0.0076	0.0410	0.0263	0.0186	0.0142
2½	0.0213	0.0139	0.0097	0.0072	0.0364	0.0246	0.0177	0.0136
3	0.0186	0.0126	0.0090	0.0070	0.0333	0.0228	0.0167	0.0129
3½	0.0164	0.0114	0.0085	0.0066	0.0290	0.0206	0.0156	0.0122
4	0.0144	0.0102	0.0079	0.0061	0.0262	0.0187	0.0146	0.0117
5	0.0114	0.0084	0.0066	0.0054	0.0210	0.0156	0.0123	0.0102
6	0.0093	0.0071	0.0057	0.0047	0.0170	0.0133	0.0107	0.0088
8	0.0065	0.0052	0.0043	0.0036	0.0114	0.0097	0.0081	0.0069
10	0.0046	0.0039	0.0033	0.0029	0.0080	0.0070	0.0062	0.0055
12	0.0034	0.0030	0.0026	0.0023	0.0059	0.0054	0.0049	0.0045
16	0.0022	0.0019	0.0017	0.0016	0.0034	0.0032	0.0030	0.0028
20	0.0013	0.0011	0.0010	0.0009	0.0024	0.0023	0.0022	0.0021
24	0.0008	0.0007	0.0006	0.0005	0.0015	0.0014	0.0013	0.0012

* These factors were computed by the methods explained in "Vertical Pressure on Culverts under Wheel Loads on Concrete-Pavement Slabs", Bull. ST65, Portland Cement Assn., Chicago, Ill. In Bulletin ST65, K if expressed as c/L^2. These factors are based on a modulus of subgrade reaction of 100 lb/cu in. and a modulus os elasticity of 4,000,000 psi for the pavement concrete. The factors for two passing trucks are based on the inside rear wheels passing 3 ft apart.

TABLE 1-1 (*Continued*)

Schedule of Barrel Thickness for Water Pipe of 18/40 Iron Strength

Laying Condition	Depth of Cover *ft*	Thickness Specifications	Internal Pressure—*psi*						
			50	100	150	200	250	300	350
			Barrel Thicknesses—*in.*						
Ten-Inch Water Pipe									
A	2½	Calculated Thickness	.40*	.41*	.42*	.43*	.45*	.46*	.48*
		Use Thickness Class	22	22	22	22	22	23	23
		Use Thickness	.44	.44	.44	.44	.44	.48	.48
	3½	Calculated Thickness	.39*	.40*	.41*	.42*	.44*	.46	.49
		Use Thickness Class	22	22	22	22	22	23	23
		Use Thickness	.44	.44	.44	.44	.44	.48	.48
	5	Calculated Thickness	.40*	.41*	.42*	.44	.46	.48	.51
		Use Thickness Class	22	22	22	22	23	23	24
		Use Thickness	.44	.44	.44	.44	.48	.48	.52
	8	Calculated Thickness	.44	.46	.47	.49	.51	.53	.55
		Use Thickness Class	22	23	23	23	24	24	25
		Use Thickness	.44	.48	.48	.48	.52	.52	.56
	12	Calculated Thickness	.51	.52	.53	.55	.56	.58	.60
		Use Thickness Class	24	24	24	25	25	26	26
		Use Thickness	.52	.52	.52	.56	.56	.60	.60
	16	Calculated Thickness	.53	.54	.56	.57	.59	.60	.62
		Use Thickness Class	24	25	25	25	26	26	26
		Use Thickness	.52	.56	.56	.56	.60	.60	.60
B	2½	Calculated Thickness	.38*	.39*	.40*	.41*	.43*	.45*	.47*
		Use Thickness Class	22	22	22	22	22	22	23
		Use Thickness	.44	.44	.44	.44	.44	.44	48
	3½	Calculated Thickness	.37*	.38*	.39*	.40*	.42*	.44	.48
		Use Thickness Class	22	22	22	22	22	22	23
		Use Thickness	.44	.44	.44	.44	.44	.44	.48
	5	Calculated Thickness	.38*	.39*	.40*	.42	.45	.47	.50
		Use Thickness Class	22	22	22	22	22	23	24
		Use Thickness	.44	.44	.44	.44	.44	.48	.52
	8	Calculated Thickness	.41*	.44	.45	.47	.49	.51	.53
		Use Thickness Class	22	22	22	23	23	24	24
		Use Thickness	.44	.44	.44	.48	.48	.52	.52
	12	Calculated Thickness	.48	.49	.51	.52	.54	.56	.58
		Use Thickness Class	23	23	24	24	25	25	26
		Use Thickness	.48	.48	.52	.52	.56	.56	.60
	16	Calculated Thickness	.50	.52	.53	.54	.56	.58	.60
		Use Thickness Class	24	24	24	25	25	26	26
		Use Thickness	.52	.52	.52	.56	.56	.60	.60
F	2½	Calculated Thickness	.35*	.36*	.37*	.38*	.41	.44	.47
		Use Thickness Class	22	22	22	22	22	22	23
		Use Thickness	.44	.44	.44	.44	.44	.44	.48
	3½	Calculated Thickness	.34*	.35*	.36*	.38	.41	.44	.47
		Use Thickness Class	22	22	22	22	22	22	23
		Use Thickness	.44	.44	.44	.44	.44	.44	.48
	5	Calculated Thickness	.35*	.36*	.38	.40	.42	.46	.48
		Use Thickness Class	22	22	22	22	22	23	23
		Use Thickness	.44	.44	.44	.44	.44	.48	.48
	8	Calculated Thickness	.39	.41	.42	.44	.46	.48	.51
		Use Thickness Class	22	22	22	22	23	23	24
		Use Thickness	.44	.44	.44	.44	.48	.48	.52
	12	Calculated Thickness	.44	.45	.46	.48	.50	.52	.54
		Use Thickness Class	22	22	23	23	24	24	25
		Use Thickness	.44	.44	.48	.48	.52	.52	.56
	16	Calculated Thickness	.46	.47	.49	.51	.52	.54	.56
		Use Thickness Class	23	23	23	24	24	25	25
		Use Thickness	.48	.48	.48	.52	.52	.56	.56

* Asterisk following total calculated thickness indicates that truck superload (Case 2) is the controlling factor. When total calculated thickness is not followed by asterisk, surge pressure (Case 1) is the controlling factor. See Sec. 1-2.1.

TABLE 1–1 (*Continued*)

Schedule of Barrel Thickness for Water Pipe of 18/40 Iron Strength

Laying Condition	Depth of Cover *ft*	Thickness Specifications	Internal Pressure—*psi* 50	100	150	200	250	300	350
			Barrel Thicknesses—*in.*						
Twelve-Inch Water Pipe									
A	2½	Calculated Thickness	.45*	.46*	.47*	.49*	.51*	.53*	.55*
		Use Thickness Class	22	22	22	22	23	23	24
		Use Thickness	.48	.48	.48	.48	.52	.52	.56
	3½	Calculated Thickness	.43*	.45*	.46*	.48*	.50*	.51	.55
		Use Thickness Class	22	22	22	22	23	23	24
		Use Thickness	.48	.48	.48	.48	.52	.52	.56
	5	Calculated Thickness	.45*	.46*	.47*	.49	.52	.54	.57
		Use Thickness Class	22	22	22	22	23	24	24
		Use Thickness	.48	.48	.48	.48	.52	.56	.56
	8	Calculated Thickness	.50	.52	.53	.55	.57	.60	.62
		Use Thickness Class	23	23	23	24	24	25	25
		Use Thickness	.52	.52	.52	.56	.56	.60	.60
	12	Calculated Thickness	.56	.57	.59	.60	.62	.64	.67
		Use Thickness Class	24	24	25	25	25	26	26
		Use Thickness	.56	.56	.60	.60	.60	.65	.65
	16	Calculated Thickness	.59	.60	.61	.63	.65	.67	.69
		Use Thickness Class	25	25	25	26	26	26	27
		Use Thickness	.60	.60	.60	.65	.65	.65	.70
B	2½	Calculated Thickness	.42*	.44*	.45*	.46*	.48*	.50*	.53*
		Use Thickness Class	22	22	22	22	22	23	23
		Use Thickness	.48	.48	.48	.48	.48	.52	.52
	3½	Calculated Thickness	.41*	.42*	.44*	.45*	.47*	.51	.55
		Use Thickness Class	22	22	22	22	22	23	24
		Use Thickness	.48	.48	.48	.48	.48	.52	.56
	5	Calculated Thickness	.42*	.43*	.45*	.47	.50	.53	.56
		Use Thickness Class	22	22	22	22	23	23	24
		Use Thickness	.48	.48	.48	.48	.52	.52	.56
	8	Calculated Thickness	.48	.49	.51	.53	.55	.57	.60
		Use Thickness Class	22	22	23	23	24	24	25
		Use Thickness	.48	.48	.52	.52	.56	.56	.60
	12	Calculated Thickness	.53	.54	.56	.57	.59	.61	.64
		Use Thickness Class	23	24	24	24	25	25	26
		Use Thickness	.52	.56	.56	.56	.60	.60	.65
	16	Calculated Thickness	.55	.57	.58	.60	.62	.64	.66
		Use Thickness Class	24	24	25	25	25	26	26
		Use Thickness	.56	.56	.60	.60	.60	.65	.65
F	2½	Calculated Thickness	.39*	.40*	.41*	.43*	.45*	.49	.53
		Use Thickness Class	22	22	22	22	22	22	23
		Use Thickness	.48	.48	.48	.48	.48	.48	.52
	3½	Calculated Thickness	.38*	.39*	.40*	.42*	.45	.50	.53
		Use Thickness Class	22	22	22	22	22	23	23
		Use Thickness	.48	.48	.48	.48	.48	.52	.52
	5	Calculated Thickness	.39*	.40*	.41*	.43*	.46	.50	.54
		Use Thickness Class	22	22	22	22	22	23	24
		Use Thickness	.48	.48	.48	.48	.48	.52	.56
	8	Calculated Thickness	.44	.45	.47	.49	.52	.55	.58
		Use Thickness Class	22	22	22	22	23	24	25
		Use Thickness	.48	.48	.48	.48	.52	.56	.60
	12	Calculated Thickness	.48	.49	.51	.53	.55	.58	.61
		Use Thickness Class	22	22	23	23	24	25	25
		Use Thickness	.48	.48	.52	.52	.56	.60	.60
	16	Calculated Thickness	.50	.52	.53	.55	.57	.59	.62
		Use Thickness Class	23	23	23	24	24	25	25
		Use Thickness	.52	.52	.52	.56	.56	.60	.60

* Asterisk following total calculated thickness indicates that truck superload (Case 2) is the controlling factor. When total calculated thickness is not followed by asterisk, surge pressure (Case 1) is the controlling factor. See Sec. 1–2.1.

TABLE 1–12

*Surface Load Factors (C) for Two Passing Trucks on Unpaved Road or Flexible Pavement**

Pipe Size *in.*	Depth of Cover—*ft* 2	2½	3	3½	4	5	6	8	10	12	16	20	24
	Surface Load Factor												
3	0.019	0.012	0.008	0.006	0.005	0.004	0.0035	0.003	0.0025	0.002	0.001	0.0007	0.0005
4	0.032	0.022	0.016	0.012	0.009	0.006	0.005	0.004	0.0035	0.003	0.002	0.0013	0.0010
6	0.058	0.042	0.032	0.024	0.020	0.014	0.010	0.007	0.006	0.005	0.003	0.0019	0.0015
8	0.076	0.058	0.044	0.036	0.030	0.022	0.017	0.011	0.009	0.007	0.004	0.0027	0.0021
10	0.092	0.072	0.056	0.046	0.039	0.028	0.021	0.014	0.011	0.008	0.005	0.0033	0.0026
12	0.108	0.086	0.070	0.056	0.047	0.034	0.027	0.018	0.012	0.009	0.006	0.0039	0.0030
14	0.122	0.098	0.078	0.065	0.055	0.040	0.031	0.020	0.014	0.010	0.007	0.0046	0.0036
16	0.136	0.110	0.090	0.074	0.062	0.046	0.036	0.024	0.016	0.012	0.009	0.0060	0.0046
18	0.149	0.122	0.101	0.084	0.070	0.052	0.041	0.027	0.019	0.014	0.010	0.0066	0.0051
20	0.162	0.136	0.115	0.096	0.080	0.060	0.048	0.032	0.022	0.016	0.012	0.0079	0.0061
24	0.185	0.152	0.126	0.106	0.091	0.067	0.053	0.036	0.026	0.019	0.013	0.0086	0.0067
30	0.212	0.176	0.146	0.124	0.107	0.080	0.064	0.044	0.032	0.024	0.016	0.0106	0.0081
36	0.235	0.202	0.169	0.146	0.127	0.095	0.075	0.052	0.038	0.028	0.019	0.0125	0.0097
42	0.251	0.218	0.188	0.162	0.140	0.108	0.087	0.059	0.044	0.034	0.023	0.0152	0.0117
48	0.264	0.234	0.205	0.178	0.157	0.122	0.097	0.067	0.050	0.038	0.026	0.0172	0.0132
54	0.274	0.244	0.216	0.190	0.170	0.133	0.108	0.074	0.057	0.044	0.028	0.0190	0.0140
60	0.281	0.256	0.228	0.202	0.181	0.144	0.117	0.081	0.061	0.047	0.030	0.0210	0.0150

* The factors are for two trucks with 6-*ft* rear wheel spacing passing with inside rear wheels 3 *ft* apart. Effective pipe length is 3 *ft*, coinciding with the distance between the adjacent inside wheels. The factors were computed by the methods explained in Sec. 24.20 and Chap. 16 of M. G. Spangler's *Soil Engineering* (2nd ed., 1960; International Textbook Co., Scranton, Pa.)

TABLE 1-11

*Surface Load Factors (C) for One Truck on Unpaved Road or Flexible Pavement**

Pipe Size *in.*	Depth of Cover—*ft*												
	2	2½	3	3½	4	5	6	8	10	12	16	20	24
	Surface Load Factor												
3	0.028	0.020	0.014	0.011	0.009	0.006	0.004	0.002	0.0015	0.001	0.0006	0.0004	0.0002
4	0.034	0.024	0.017	0.013	0.011	0.007	0.005	0.003	0.002	0.0015	0.0008	0.0005	0.0003
6	0.048	0.034	0.025	0.020	0.015	0.010	0.007	0.004	0.003	0.002	0.001	0.0007	0.0004
8	0.062	0.044	0.033	0.026	0.020	0.013	0.009	0.006	0.0035	0.0025	0.0013	0.0008	0.0005
10	0.074	0.054	0.040	0.031	0.025	0.016	0.012	0.007	0.004	0.003	0.0016	0.001	0.0006
12	0.087	0.063	0.048	0.036	0.030	0.019	0.014	0.008	0.005	0.0035	0.002	0.0012	0.0007
14	0.099	0.072	0.055	0.042	0.034	0.022	0.016	0.010	0.006	0.004	0.0025	0.0015	0.0008
16	0.110	0.082	0.061	0.047	0.038	0.025	0.018	0.011	0.007	0.005	0.003	0.0017	0.001
18	0.122	0.090	0.068	0.052	0.042	0.028	0.020	0.012	0.008	0.0055	0.0035	0.002	0.0012
20	0.132	0.098	0.075	0.058	0.046	0.031	0.022	0.013	0.009	0.006	0.004	0.0025	0.0015
24	0.150	0.113	0.087	0.068	0.054	0.037	0.026	0.015	0.010	0.007	0.0045	0.003	0.0017
30	0.171	0.132	0.102	0.081	0.065	0.045	0.031	0.019	0.012	0.009	0.005	0.0035	0.002
36	0.188	0.148	0.117	0.093	0.076	0.052	0.037	0.022	0.015	0.010	0.006	0.004	0.0025
42	0.200	0.160	0.129	0.103	0.085	0.059	0.043	0.025	0.017	0.012	0.007	0.0045	0.003
48	0.210	0.170	0.139	0.113	0.093	0.066	0.048	0.029	0.019	0.013	0.008	0.005	0.0033
54	0.216	0.178	0.147	0.120	0.101	0.072	0.053	0.032	0.021	0.015	0.0085	0.0055	0.0036
60	0.222	0.184	0.153	0.126	0.107	0.077	0.057	0.035	0.023	0.016	0.009	0.006	0.004

* These factors are for a single concentrated wheel load centered over an effective pipe length of 3 ft. They were computed by the methods explained in Article 24.20 and Chap. 16 of M. G. Spangler's *Soil Engineering* (2nd ed., 1960; International Textbook Co., Scranton, Pa.).

TABLE 1-1 (*Continued*)

Schedule of Barrel Thickness for Water Pipe of 18/40 Iron Strength

Laying Condition	Depth of Cover *ft*	Thickness Specifications	Internal Pressure—*psi*						
			50	100	150	200	250	300	350
			Barrel Thicknesses—*in.*						
Fourteen-Inch Water Pipe									
A	2½	Calculated Thickness	.51*	.52*	.54*	.55*	.58*	.60*	.62*
		Use Thickness Class	22	22	23	23	24	24	25
		Use Thickness	.51	.51	.55	.55	.59	.59	.64
	3½	Calculated Thickness	.50*	.51*	.53*	.54*	.57*	.60	.64
		Use Thickness Class	22	22	23	23	24	24	25
		Use Thickness	.51	.51	.55	.55	.59	.59	.64
	5	Calculated Thickness	.51*	.53*	.54*	.56*	.59	.62	.66
		Use Thickness Class	22	23	23	23	24	25	25
		Use Thickness	.51	.55	.55	.55	.59	.64	.64
	8	Calculated Thickness	.58	.60	.62	.64	.66	.69	.72
		Use Thickness Class	24	24	25	25	25	26	27
		Use Thickness	.59	.59	.64	.64	.64	.69	.75
	12	Calculated Thickness	.63	.65	.67	.69	.71	.74	.76
		Use Thickness Class	25	25	26	26	26	27	27
		Use Thickness	.64	.64	.69	.69	.69	.75	.75
	16	Calculated Thickness	.67	.68	.70	.72	.74	.76	.79
		Use Thickness Class	26	26	26	27	27	27	28
		Use Thickness	.69	.69	.69	.75	.75	.75	.81
B	2½	Calculated Thickness	.47*	.49*	.51*	.52*	.54*	.57*	.62
		Use Thickness Class	21	21	22	22	23	24	25
		Use Thickness	.48	.48	.51	.51	.55	.59	.64
	3½	Calculated Thickness	.46*	.47*	.49*	.51*	.54	.57	.63
		Use Thickness Class	21	21	22	22	23	24	25
		Use Thickness	.48	.48	.51	.51	.55	.59	.64
	5	Calculated Thickness	.48*	.49*	.52	.54	.57	.61	.65
		Use Thickness Class	21	22	22	23	24	24	25
		Use Thickness	.48	.51	.51	.55	.59	.59	.64
	8	Calculated Thickness	.54	.56	.58	.61	.63	.66	.69
		Use Thickness Class	23	23	24	24	25	25	26
		Use Thickness	.55	.55	.59	.59	.64	.64	.69
	12	Calculated Thickness	.59	.61	.63	.65	.68	.70	.73
		Use Thickness Class	24	24	25	25	26	26	27
		Use Thickness	.59	.59	.64	.64	.69	.69	.75
	16	Calculated Thickness	.62	.64	.66	.68	.70	.73	.75
		Use Thickness Class	25	25	25	26	26	27	27
		Use Thickness	.64	.64	.64	.69	.69	.75	.75
F	2½	Calculated Thickness	.44*	.45*	.47*	.49*	.52	.57	.61
		Use Thickness Class	21	21	21	21	22	24	24
		Use Thickness	.48	.48	.48	.48	.51	.59	.59
	3½	Calculated Thickness	.44*	.45*	.47	.50	.53	.57	.62
		Use Thickness Class	21	21	21	22	23	24	25
		Use Thickness	.48	.48	.48	.51	.55	.59	.64
	5	Calculated Thickness	.45	.47	.49	.52	.55	.59	.64
		Use Thickness Class	21	21	21	22	23	24	25
		Use Thickness	.48	.48	.48	.51	.55	.59	.64
	8	Calculated Thickness	.50	.52	.54	.57	.60	.64	.66
		Use Thickness Class	22	22	23	24	24	25	25
		Use Thickness	.51	.51	.55	.59	.59	.64	.64
	12	Calculated Thickness	.54	.56	.58	.61	.63	.66	.69
		Use Thickness Class	23	23	24	24	25	25	26
		Use Thickness	.55	.55	.59	.59	.64	.64	.69
	16	Calculated Thickness	.57	.58	.60	.63	.65	.68	.71
		Use Thickness Class	24	24	24	25	25	26	26
		Use Thickness	.59	.59	.59	.64	.64	.69	.69

* Asterisk following total calculated thickness indicates that truck superload (Case 2) is the controlling factor. When total calculated thickness is not followed by asterisk, surge pressure (Case 1) is the controlling factor. See Sec. 1-2.1.

TABLE 1-1 (*Continued*)

Schedule of Barrel Thickness for Water Pipe of 18/40 Iron Strength

Laying Condition	Depth of Cover *ft*	Thickness Specifications	Internal Pressure—*psi* 50	100	150	200	250	300	350
			Barrel Thicknesses—*in.*						
Sixteen-Inch Water Pipe									
A	2½	Calculated Thickness	.54*	.56*	.58*	.60*	.62*	.65*	.68*
		Use Thickness Class	22	23	23	23	24	24	25
		Use Thickness	.54	.58	.58	.58	.63	.63	.68
	3½	Calculated Thickness	.54*	.55*	.57*	.59*	.61	.65	.70
		Use Thickness Class	22	22	23	23	24	24	25
		Use Thickness	.54	.54	.58	.58	.63	.63	.68
	5	Calculated Thickness	.56*	.57*	.59*	.61*	.64	.68	.72
		Use Thickness Class	23	23	23	24	24	25	26
		Use Thickness	.58	.58	.58	.63	.63	.68	.73
	8	Calculated Thickness	.62	.64	.66	.69	.72	.75	.78
		Use Thickness Class	24	24	25	25	26	26	27
		Use Thickness	.63	.63	.68	.68	.73	.73	.79
	12	Calculated Thickness	.68	.70	.72	.74	.77	.80	.83
		Use Thickness Class	25	25	26	26	27	27	28
		Use Thickness	.68	.68	.73	.73	.79	.79	.85
	16	Calculated Thickness	.72	.74	.76	.78	.81	.83	.86
		Use Thickness Class	26	26	27	27	27	28	28
		Use Thickness	.73	.73	.79	.79	.79	.85	.85
B	2½	Calculated Thickness	.50*	.52*	.54*	.56*	.56*	.62*	.65*
		Use Thickness Class	21	22	22	23	23	24	25
		Use Thickness	.50	.54	.54	.58	.58	.63	.68
	3½	Calculated Thickness	.50*	.52*	.53*	.56*	.59	.63	.68
		Use Thickness Class	21	22	22	23	23	24	25
		Use Thickness	.50	.54	.54	.58	.58	.63	.68
	5	Calculated Thickness	.52*	.53*	.55*	.58	.62	.66	.70
		Use Thickness Class	22	22	22	23	24	25	25
		Use Thickness	.54	.54	.54	.58	.63	.68	.68
	8	Calculated Thickness	.58	.60	.62	.65	.68	.71	.75
		Use Thickness Class	23	23	24	24	25	26	26
		Use Thickness	.58	.58	.63	.63	.68	.73	.73
	12	Calculated Thickness	.63	.65	.68	.70	.73	.76	.79
		Use Thickness Class	24	24	25	25	26	27	27
		Use Thickness	.63	.63	.68	.68	.73	.79	.79
	16	Calculated Thickness	.67	.69	.71	.73	.76	.79	.82
		Use Thickness Class	25	25	26	26	27	27	28
		Use Thickness	.68	.68	.73	.73	.79	.79	.85
F	2½	Calculated Thickness	.47*	.48*	.50*	.52*	.56	.61	.67
		Use Thickness Class	21	21	21	22	23	24	25
		Use Thickness	.50	.50	.50	.54	.58	.63	.68
	3½	Calculated Thickness	.46*	.47*	.50	.53	.57	.62	.67
		Use Thickness Class	21	21	21	22	23	24	25
		Use Thickness	.50	.50	.50	.54	.58	.63	.68
	5	Calculated Thickness	.48*	.50	.52	.56	.59	.64	.68
		Use Thickness Class	21	21	22	23	23	24	25
		Use Thickness	.50	.50	.54	.58	.58	.63	.68
	8	Calculated Thickness	.53	.55	.58	.61	.64	.68	.72
		Use Thickness Class	22	22	23	24	24	25	26
		Use Thickness	.54	.54	.58	.63	.63	.68	.73
	12	Calculated Thickness	.57	.59	.62	.65	.68	.71	.75
		Use Thickness Class	23	23	24	24	25	26	26
		Use Thickness	.58	.58	.63	.63	.68	.73	.73
	16	Calculated Thickness	.61	.63	.65	.68	.71	.74	.77
		Use Thickness Class	24	24	24	25	26	26	27
		Use Thickness	.63	.63	.63	.68	.73	.73	.79

* Asterisk following total calculated thickness indicates that truck superload (Case 2) is the controlling factor. When total calculated thickness is not followed by asterisk, surge pressure (Case 1) is the controlling factor. See Sec. 1-2.1.

TABLE 1-9

Load Factors for Cast-Iron Pipe in Ditch and Embankment Conditions

Pipe Size *in.*	$\frac{H^*}{B_e}$	Laying Condition A	B	F
		Load Factor (L_f)		
Ditch and Negative Projection Conditions†				
3		1.15	1.28	1.74
4		1.15	1.29	1.75
6		1.15	1.32	1.78
8		1.15	1.34	1.80
10		1.15	1.36	1.83
12		1.15	1.38	1.85
14		1.15	1.41	1.88
16		1.15	1.43	1.90
18		1.15	1.45	1.93
20		1.15	1.47	1.95
24		1.15	1.52	2.00
30		1.15	1.58	2.08
36		1.15	1.64	2.14
42		1.15	1.69	2.20
48		1.15	1.72	2.25

Pipe Size *in.*	$\frac{H^*}{B_e}$	Laying Condition A	B	F
		Load Factor (L_f)		
Ditch and Negative Projection Conditions† (*Continued*)				
54		1.15	1.75	2.29
60		1.15	1.77	2.31
Positive-Projection Condition†				
	0.5	1.50	2.16	
	1.0	1.36	1.84	
	1.5	1.29	1.74	
	2.0	1.26	1.68	
	3.0	1.26	1.64	
	5.0	1.26	1.60	
	10.0	1.26	1.58	

* H is depth of cover to top of pipe, in feet; B_e is outside diameter of pipe, in feet (see Table 1-15).
† See Fig. 1-7 and See Sec. 1-3.2.

TABLE 1-10

Allowances for Surge Pressure

Pipe Size *in.*	Surge Pressure *psi*	Pipe Size *in.*	Surge Pressure *psi*
3–10	120	24	85
12–14	110	30	80
16–18	100	36	75
20	90	42–60	70

TABLE 1-8

*Earth Loads (W_e) and Truck Superloads (W_t)—lb/lin ft**

Pipe Size in.	Depth of Cover—ft																							
	2½		3½		5		8		12		16		20		24	
	W_e	W_t	W_e	W_t	W_e	W_t	W_e	W_t	W_e	W_t	W_e	W_t	W_e	W_t	W_e	W_t
3	182	162	260	81	376	54	609	40	920	27	1,230	14	1,538	9	1,852	7
4	226	297	324	162	471	81	765	54	1,157	40	1,549	27	1,942	18	2,334	14
6	309	567	448	324	657	189	1,075	94	1,632	68	2,188	40	2,524	26	2,647	20
8	380	783	557	486	824	297	1,356	148	2,066	94	2,592	54	2,815	36	2,965	28
10	448	972	666	621	992	378	1,645	189	2,473	108	2,851	68	3,114	45	3,295	35
12	511	1,161	770	756	1,159	459	1,950	243	2,686	122	3,116	81	3,419	53	3,635	41
14	568	1,217	868	807	1,318	540	2,218	270	2,900	135	3,384	94	3,733	62	3,983	48
16	617	1,307	959	879	1,470	590	2,381	324	3,117	162	3,659	122	4,050	81	4,339	62
18	665	1,400	1,042	964	1,616	632	2,533	364	3,335	189	3,932	135	4,374	89	4,703	69
20	714	1,524	1,119	1,076	1,755	729	2,686	410	3,555	216	4,209	162	4,703	107	5,075	83
24	814	1,662	1,256	1,159	2,011	769	2,994	462	3,999	256	4,774	176	5,372	116	5,833	90
30	963	1,925	1,457	1,356	2,340	918	3,459	564	4,674	324	5,638	216	6,401	143	7,009	110
36	1,121	2,182	1,668	1,577	2,628	1,090	3,927	632	5,356	378	6,517	256	7,461	169	8,226	131
42	1,270	2,354	1,878	1,750	2,917	1,239	4,396	717	6,016	459	7,408	310	8,535	205	9,474	158
48	1,427	2,527	2,093	1,922	3,216	1,400	4,867	814	6,737	513	8,308	351	9,627	232	10,743	179
54	1,581	2,635	2,310	2,052	3,519	1,526	5,340	899	7,434	594	9,218	378	10,739	256	12,034	189
60	1,738	2,765	2,527	2,182	3,824	1,652	5,816	984	8,195	634	10,133	405	11,857	284	13,339	202

* Earth loads are based on the following conditions: trench width (B_d) equal to nominal pipe diameter plus 2 ft; unit weight of soil, 120 lb/cu ft; $K\mu$ equal to 0.1924 and $K\mu'$ equal to 0.130. Truck superloads are based on two passing trucks with adjacent wheels 3 ft apart, having a 9,000-lb wheel load on unpaved road or flexible pavement and a 1.50 impact factor.

TABLE 1-1 (*Continued*)

Schedule of Barrel Thickness for Water Pipe of 18/40 Iron Strength

Laying Condition	Depth of Cover ft	Thickness Specifications	Internal Pressure—psi: 50	100	150	200	250	300	350
			Barrel Thicknesses—in.						
Eighteen-Inch Water Pipe									
A	2½	Calculated Thickness	.58*	.60*	.62*	.65*	.67*	.70*	.74*
		Use Thickness Class	22	22	23	23	24	24	25
		Use Thickness	.58	.58	.63	.63	.68	.68	.73
	3½	Calculated Thickness	.58*	.59*	.62*	.64*	.67*	.70	.76
		Use Thickness Class	22	22	23	23	24	24	26
		Use Thickness	.58	.58	.63	.63	.68	.68	.79
	5	Calculated Thickness	.60*	.62*	.64*	.67	.70	.75	.79
		Use Thickness Class	22	23	23	24	24	25	26
		Use Thickness	.58	.63	.63	.68	.68	.73	.79
	8	Calculated Thickness	.67	.69	.72	.74	.77	.81	.85
		Use Thickness Class	24	24	25	25	26	26	27
		Use Thickness	.68	.68	.73	.73	.79	.79	.85
	12	Calculated Thickness	.73	.75	.78	.80	.83	.86	.90
		Use Thickness Class	25	25	26	26	27	27	28
		Use Thickness	.73	.73	.79	.79	.85	.85	.92
	16	Calculated Thickness	.77	.80	.82	.85	.88	.91	.95
		Use Thickness Class	26	26	27	27	27	28	28
		Use Thickness	.79	.79	.85	.85	.85	.92	.92
B	2½	Calculated Thickness	.54*	.56*	.58*	.60*	.63*	.67	.73
		Use Thickness Class	21	22	22	22	23	24	25
		Use Thickness	.54	.58	.58	.58	.63	.68	.73
	3½	Calculated Thickness	.53*	.55*	.57*	.60	.64	.69	.75
		Use Thickness Class	21	21	22	22	23	24	25
		Use Thickness	.54	.54	.58	.58	.63	.68	.73
	5	Calculated Thickness	.55*	.58*	.60	.63	.67	.72	.77
		Use Thickness Class	21	22	22	23	24	25	26
		Use Thickness	.54	.58	.58	.63	.68	.73	.79
	8	Calculated Thickness	.62	.64	.67	.70	.74	.77	.82
		Use Thickness Class	23	23	24	24	25	26	27
		Use Thickness	.63	.63	.68	.68	.73	.79	.85
	12	Calculated Thickness	.68	.70	.73	.75	.78	.82	.86
		Use Thickness Class	24	24	25	25	26	27	27
		Use Thickness	.68	.68	.73	.73	.79	.85	.85
	16	Calculated Thickness	.72	.74	.76	.79	.82	.85	.89
		Use Thickness Class	25	25	26	26	27	27	28
		Use Thickness	.73	.73	.79	.79	.85	.85	.92
F	2½	Calculated Thickness	.50*	.51*	.53*	.56*	.61	.67	.73
		Use Thickness Class	21	21	21	22	23	24	25
		Use Thickness	.54	.54	.54	.58	.63	.68	.73
	3½	Calculated Thickness	.49*	.51	.53	.57	.62	.67	.73
		Use Thickness Class	21	21	21	22	23	24	25
		Use Thickness	.54	.54	.54	.58	.63	.68	.73
	5	Calculated Thickness	.51*	.53	.57	.60	.65	.70	.75
		Use Thickness Class	21	21	22	22	23	24	25
		Use Thickness	.54	.54	.58	.58	.63	.68	.73
	8	Calculated Thickness	.57	.59	.62	.65	.69	.74	.78
		Use Thickness Class	22	22	23	23	24	25	26
		Use Thickness	.58	.58	.63	.63	.68	.73	.79
	12	Calculated Thickness	.61	.64	.67	.70	.73	.77	.81
		Use Thickness Class	23	23	24	24	25	26	26
		Use Thickness	.63	.63	.68	.68	.73	.79	.79
	16	Calculated Thickness	.65	.67	.69	.72	.76	.80	.84
		Use Thickness Class	23	24	24	25	26	26	27
		Use Thickness	.63	.68	.68	.73	.79	.79	.85

* Asterisk following total calculated thickness indicates that truck superload (Case 2) is the controlling factor. When total calculated thickness is not followed by asterisk, surge pressure (Case 1) is the controlling factor. See Sec. 1-2.1.

TABLE 1-1 (*Continued*)

Schedule of Barrel Thickness for Water Pipe of 18/40 Iron Strength

Laying Condition	Depth of Cover *ft*	Thickness Specifications	Internal Pressure—*psi* 50	100	150	200	250	300	350
			Barrel Thicknesses—*in.*						
		Twenty-Inch Water Pipe							
A	2½	Calculated Thickness	.62*	.65*	.67*	.70*	.73*	.76*	.80*
		Use Thickness Class	22	23	23	24	24	25	25
		Use Thickness	.62	.67	.67	.72	.72	.78	.78
	3½	Calculated Thickness	.62*	.64*	.66*	.69*	.72*	.76*	.80
		Use Thickness Class	22	22	23	23	24	25	26
		Use Thickness	.62	.62	.67	.67	.72	.78	.84
	5	Calculated Thickness	.65*	.67*	.69*	.72*	.75*	.80	.85
		Use Thickness Class	23	23	23	24	25	25	26
		Use Thickness	.67	.67	.67	.72	.78	.78	.84
	8	Calculated Thickness	.71	.73	.76	.79	.83	.87	.91
		Use Thickness Class	24	24	25	25	26	26	27
		Use Thickness	.72	.72	.78	.78	.84	.84	.91
	12	Calculated Thickness	.78	.80	.83	.86	.89	.93	.97
		Use Thickness Class	25	25	26	26	27	27	28
		Use Thickness	.78	.78	.84	.84	.91	.91	.98
	16	Calculated Thickness	.83	.86	.88	.91	.94	.97	1.01
		Use Thickness Class	26	26	27	27	27	28	28
		Use Thickness	.84	.84	.91	.91	.91	.98	.98
B	2½	Calculated Thickness	.57*	.59*	.62*	.65*	.68*	.72	.78
		Use Thickness Class	21	21	22	23	23	24	25
		Use Thickness	.57	.57	.62	.67	.67	.72	.78
	3½	Calculated Thickness	.57*	.58*	.62*	.64*	.68	.74	.80
		Use Thickness Class	21	21	22	22	23	24	25
		Use Thickness	.57	.57	.62	.62	.67	.72	.78
	5	Calculated Thickness	.59*	.61*	.64*	.67	.72	.77	.82
		Use Thickness Class	21	22	22	23	24	25	26
		Use Thickness	.57	.62	.62	.67	.72	.78	.84
	8	Calculated Thickness	.65	.68	.71	.74	.78	.82	.87
		Use Thickness Class	23	23	24	24	25	26	26
		Use Thickness	.67	.67	.72	.72	.78	.84	.84
	12	Calculated Thickness	.71	.74	.77	.80	.84	.87	.92
		Use Thickness Class	24	24	25	25	26	26	27
		Use Thickness	.72	.72	.78	.78	.84	.84	.91
	16	Calculated Thickness	.76	.78	.81	.84	.87	.91	.95
		Use Thickness Class	25	25	26	26	26	27	28
		Use Thickness	.78	.78	.84	.84	.84	.91	.98
F	2½	Calculated Thickness	.51*	.53*	.57*	.60*	.64	.70	.77
		Use Thickness Class	21	21	21	22	22	24	25
		Use Thickness	.57	.57	.57	.62	.62	.72	.78
	3½	Calculated Thickness	.52	.54	.57	.61	.66	.72	.78
		Use Thickness Class	21	21	21	22	23	24	25
		Use Thickness	.57	.57	.57	.62	.67	.72	.78
	5	Calculated Thickness	.53	.56	.60	.64	.69	.74	.80
		Use Thickness Class	21	21	22	22	23	24	25
		Use Thickness	.57	.57	.62	.62	.67	.72	.78
	8	Calculated Thickness	.60	.62	.65	.69	.73	.78	.83
		Use Thickness Class	22	22	23	23	24	25	26
		Use Thickness	.62	.62	.67	.67	.72	.78	.84
	12	Calculated Thickness	.65	.68	.71	.74	.78	.82	.87
		Use Thickness Class	23	23	24	24	25	26	26
		Use Thickness	.67	.67	.72	.72	.78	.84	.84
	16	Calculated Thickness	.69	.71	.74	.77	.81	.85	.90
		Use Thickness Class	23	24	24	25	26	26	27
		Use Thickness	.67	.72	.72	.78	.84	.84	.91

* Asterisk following total calculated thickness indicates that truck superload (Case 2) is the controlling factor. When total calculated thickness is not followed by asterisk, surge pressure (Case 1) is the controlling factor. See Sec. 1-2.1.

1.2.12 of the AASHO specification, as follows:

AASHO Truck	Gross Weight	Wheel Load, *P*
H-10	10 tons	8,000 lb
H-15	15 tons	12,000 lb
H-20	20 tons	16,000 lb

Depth of Cover	Impact Factor, *F*
0 ft to 1 ft, 0 in.	1.30
1 ft, 1 in., to 2 ft, 0 in.	1.20
2 ft, 1 in., to 2 ft, 11 in.	1.10
3 ft, 0 in., or more	1.00

The truck superload allowances given in Tables 1–4 and 1–8 are intended for standard conditions. They are based on two passing trucks with adjacent wheels 3 ft apart, 9,000-lb wheel load, unpaved road or flexible pavement, 1.50 impact factor. These loads in most cases equal or exceed the static load from a single AASHO H-20 truck with 16,000 lb on each rear wheel. These truck superloads are based on having the design depth of cover over the pipe. Consideration should be given to the loads that may be transmitted to the pipe if either truck superloads or heavy construction equipment is permitted to pass over the pipe at less than the design depth of cover.

in a flat-bottom trench $(d + 2)$ ft wide.

Step 1. Calculate earth load for ditch condition using Eq 8.

$$C_d = \frac{1 - e^{-2K\mu' \frac{H}{B_d}}}{2K\mu'} \qquad (10)$$

$K\mu' = 0.130$
$H = 5$ ft

$$B_d = \frac{12}{12} + 2 = 3 \text{ ft}$$

$$C_d = \frac{1 - e^{-2(0.130)\left(\frac{5}{3}\right)}}{2(0.130)} = \frac{0.3516}{0.260} = 1.35$$

$$W_e = C_d w B_d^2 \qquad (8)$$
$$= 1.35(120)(3)^2$$
$$= 1{,}460 \text{ lb/ft}$$

Step 2. Calculate earth load for projection condition using Eq 9.

$$H_e = 1.75\, B_c = 1.75\left(\frac{13.20}{12}\right)$$
$$= 1.75(1.10) = 1.92 \text{ ft}$$

H is greater than H_e, therefore use Eq 12 or 12a to calculate C_c. Using Eq 12a:

$$C_c = 1.961\frac{H}{B_c} - 0.934 \qquad (12a)$$
$$= 1.961\left(\frac{5}{1.10}\right) - 0.934$$
$$= 7.98$$

$$W_e = C_c w B_c^2 \qquad (9)$$
$$= 7.98\,(120)(1.10)^2$$
$$= 1{,}159 \text{ lb/ft}$$

Step 3. Select lesser load from Step 1 or 2. The load for projection condition is the lesser. Therefore, the earth load, W_e, is 1,159 lb/ft. This load is shown in Table 1–8.

Sec. 1–3.3—Truck Superloads (W_t)

The procedures in this section may be used to compute truck superloads for unpaved roads, flexible pavement or rigid pavement; one truck or two passing trucks; and any wheel load and impact factor. For unpaved road or flexible pavement Eq 15 is used. For rigid pavement Eq 16 is used.

$$W_t = CRPF \qquad (15)$$

$$W_t = KB_cPF \qquad (16)$$

in which:

W_t = Truck superload (lb/lin ft)
C = Surface load factor for unpaved road or flexible pavement (for one truck, see Table 1–11; for two trucks, see Table 1–12).
R = Reduction factor which takes account of the fact that the part of the pipe directly below the wheels receives the truck superload in its full intensity but is aided in carrying the load by adjacent parts of the pipe that receive little or no load from the truck. (See Table 1–13.)
P = Wheel load (lb)
F = Impact factor
K = Surface load factor for rigid pavement (see Table 1–14).
B_c = Outside diameter of pipe (ft) (see Table 1–15).

Equations 15 and 16 may be used in computing AASHO truck loading which is described in "Standard Specifications for Highway Bridges," American Assn. of State Highway Officials, 1961. The wheel loads and impact factors to be used in the equations are given in Art. 1.2.5 and

TABLE 1–1 (*Continued*)

Schedule of Barrel Thickness for Water Pipe of 18/40 Iron Strength

Laying Condition	Depth of Cover *ft*	Thickness Specifications	Internal Pressure—*psi* 50	100	150	200	250	300	350
			Barrel Thicknesses—*in.*						
Twenty-four-Inch Water Pipe									
A	2½	Calculated Thickness	.69*	.72*	.75*	.78*	.82*	.86*	.91*
		Use Thickness Class	22	23	23	24	25	25	26
		Use Thickness	.68	.73	.73	.79	.85	.85	.92
	3½	Calculated Thickness	.69*	.71*	.74*	.78*	.81*	.86	.93
		Use Thickness Class	22	23	23	24	24	25	26
		Use Thickness	.68	.73	.73	.79	.79	.85	.92
	5	Calculated Thickness	.72*	.75*	.78*	.81*	.85*	.91	.96
		Use Thickness Class	23	23	24	24	25	26	27
		Use Thickness	.73	.73	.79	.79	.85	.92	.99
	8	Calculated Thickness	.80	.82	.86	.90	.94	.99	1.04
		Use Thickness Class	24	25	25	26	26	27	28
		Use Thickness	.79	.85	.85	.92	.92	.99	1.07
	12	Calculated Thickness	.88	.91	.94	.98	1.02	1.06	1.10
		Use Thickness Class	25	26	26	27	27	28	28
		Use Thickness	.85	.92	.92	.99	.99	1.07	1.07
	16	Calculated Thickness	.94	.97	1.00	1.03	1.07	1.11	1.15
		Use Thickness Class	26	27	27	28	28	28	29
		Use Thickness	.92	.99	.99	1.07	1.07	1.07	1.16
B	2½	Calculated Thickness	.63*	.65*	.68*	.72*	.76*	.82	.90
		Use Thickness Class	21	21	22	23	24	25	26
		Use Thickness	.63	.63	.68	.73	.79	.85	.92
	3½	Calculated Thickness	.62*	.65*	.68*	.71*	.77	.84	.91
		Use Thickness Class	21	21	22	23	24	25	26
		Use Thickness	.63	.63	.68	.73	.79	.85	.92
	5	Calculated Thickness	.65*	.67*	.71*	.76	.81	.88	.94
		Use Thickness Class	21	22	23	24	24	25	26
		Use Thickness	.63	.68	.73	.79	.79	.85	.92
	8	Calculated Thickness	.72	.75	.79	.83	.88	.94	.99
		Use Thickness Class	23	23	24	25	25	26	27
		Use Thickness	.73	.73	.79	.85	.85	.92	.99
	12	Calculated Thickness	.79	.82	.86	.90	.94	.99	1.04
		Use Thickness Class	24	25	25	26	26	27	28
		Use Thickness	.79	.85	.85	.92	.92	.99	1.07
	16	Calculated Thickness	.85	.88	.91	.95	.99	1.03	1.08
		Use Thickness Class	25	25	26	26	27	28	28
		Use Thickness	.85	.85	.92	.92	.99	1.07	1.07
F	2½	Calculated Thickness	.56*	.58*	.63*	.67*	.73	.81	.89
		Use Thickness Class	21	21	21	22	23	24	26
		Use Thickness	.63	.63	.63	.68	.73	.79	.92
	3½	Calculated Thickness	.56*	.59	.63	.69	.75	.82	.90
		Use Thickness Class	21	21	21	22	23	25	26
		Use Thickness	.63	.63	.63	.68	.73	.85	.92
	5	Calculated Thickness	.59	.63	.67	.72	.78	.84	.92
		Use Thickness Class	21	21	22	23	24	25	26
		Use Thickness	.63	.63	.68	.73	.79	.85	.92
	8	Calculated Thickness	.66	.69	.73	.77	.83	.89	.95
		Use Thickness Class	22	22	23	24	25	26	26
		Use Thickness	.68	.68	73	.79	.85	.92	.92
	12	Calculated Thickness	.72	.75	.79	.83	.88	.93	.99
		Use Thickness Class	23	23	24	25	25	26	27
		Use Thickness	.73	.73	.79	.85	.85	.92	.99
	16	Calculated Thickness	.77	.80	.83	.87	.91	.96	1.02
		Use Thickness Class	24	24	25	25	26	27	27
		Use Thickness	.79	.79	.85	.85	.92	.99	.99

* Asterisk following total calculated thickness indicates that truck superload (Case 2) is the controlling factor. When total calculated thickness is not followed by asterisk, surge pressure (Case 1) is the controlling factor. See Sec. 1–2.1.

TABLE 1-1 (*Continued*)

Schedule of Barrel Thickness for Water Pipe of 18/40 Iron Strength

Laying Condition	Depth of Cover *ft*	Thickness Specifications	Internal Pressure—*psi*						
			50	100	150	200	250	300	350
			Barrel Thicknesses—*in.*						
		Thirty-Inch Water Pipe							
A	2½	Calculated Thickness	.83*	.86*	.90*	.94*	.98*	1.04*	1.10
		Use Thickness Class	23	23	24	24	25	26	26
		Use Thickness	.85	.85	.92	.92	.99	1.07	1.07
	3½	Calculated Thickness	.82*	.85*	.89*	.93*	.98*	1.04	1.12
		Use Thickness Class	23	23	24	24	25	26	27
		Use Thickness	.85	.85	.92	.92	.99	1.07	1.16
	5	Calculated Thickness	.86*	.90*	.93*	.97*	1.03	1.10	1.18
		Use Thickness Class	23	24	24	25	26	26	27
		Use Thickness	.85	.92	.92	.99	1.07	1.07	1.16
	8	Calculated Thickness	.94*	.98	1.02	1.07	1.12	1.19	1.25
		Use Thickness Class	24	25	25	26	27	27	28
		Use Thickness	.92	.99	.99	1.07	1.16	1.16	1.25
	12	Calculated Thickness	1.05	1.08	1.12	1.17	1.22	1.28	1.33
		Use Thickness Class	26	26	27	27	28	28	29
		Use Thickness	1.07	1.07	1.16	1.16	1.25	1.25	1.35
	16	Calculated Thickness	1.13	1.17	1.20	1.25	1.29	1.35	1.40
		Use Thickness Class	27	27	27	28	28	29	29
		Use Thickness	1.16	1.16	1.16	1.25	1.25	1.35	1.35
B	2½	Calculated Thickness	.74*	.77*	.81*	.85*	.90*	.99	1.09
		Use Thickness Class	21	22	22	23	24	25	26
		Use Thickness	.73	.79	.79	.85	.92	.99	1.07
	3½	Calculated Thickness	.73*	.76*	.80*	.85*	.92	1.01	1.10
		Use Thickness Class	21	22	22	23	24	25	26
		Use Thickness	.73	.79	.79	.85	.92	.99	1.07
	5	Calculated Thickness	.77*	.80*	.84*	.90	.97	1.05	1.13
		Use Thickness Class	22	22	23	24	25	26	27
		Use Thickness	.79	.79	.85	.92	.99	1.07	1.16
	8	Calculated Thickness	.84	.88	.93	.98	1.05	1.11	1.18
		Use Thickness Class	23	23	24	25	26	26	27
		Use Thickness	.85	.85	.92	.99	1.07	1.07	1.16
	12	Calculated Thickness	.93	.97	1.01	1.06	1.12	1.18	1.25
		Use Thickness Class	24	25	25	26	27	27	28
		Use Thickness	.92	.99	.99	1.07	1.16	1.16	1.25
	16	Calculated Thickness	1.00	1.04	1.08	1.13	1.18	1.24	1.30
		Use Thickness Class	25	26	26	27	27	28	29
		Use Thickness	.99	1.07	1.07	1.16	1.16	1.25	1.35
F	2½	Calculated Thickness	.66*	.70*	.74*	.79*	.88	.98	1.08
		Use Thickness Class	21	21	21	22	23	25	26
		Use Thickness	.73	.73	.73	.79	.85	.99	1.07
	3½	Calculated Thickness	.66*	.70*	.74*	.80	.90	1.00	1.10
		Use Thickness Class	21	21	21	22	24	25	26
		Use Thickness	.73	.73	.73	.79	.92	.99	1.07
	5	Calculated Thickness	.70*	.73*	.79	.86	.93	1.01	1.11
		Use Thickness Class	21	21	22	23	24	25	26
		Use Thickness	.73	.73	.79	.85	.92	.99	1.07
	8	Calculated Thickness	.77	.81	.86	.93	1.00	1.07	1.15
		Use Thickness Class	22	22	23	24	25	26	27
		Use Thickness	.79	.79	.85	.92	.99	1.07	1.16
	12	Calculated Thickness	.85	.89	.94	.99	1.05	1.12	1.20
		Use Thickness Class	23	24	24	25	26	27	27
		Use Thickness	.85	.92	.92	.99	1.07	1.16	1.16
	16	Calculated Thickness	.91	.95	.99	1.04	1.10	1.16	1.23
		Use Thickness Class	24	24	25	26	26	27	28
		Use Thickness	.92	.92	.99	1.07	1.07	1.16	1.25

* Asterisk following total calculated thickness indicates that truck superload (Case 2) is the controlling factor. When total calculated thickness is not followed by asterisk, surge pressure (Case 1) is the controlling factor. See Sec. 1-2.1.

Saturated top soil, maximum	0.150
Clay, ordinary maximum	0.130
Saturated clay, maximum	0.110

1-3.2.2—*Positive-Projection Embankment*

The positive-projection condition may be encountered with pipe laid on top of a subgrade and covered with fill for highway or dam construction. The earth load is calculated from Eq 9 using Eq 12a for calculation of C_c when standard values of $r_{sd}p$ and $K\mu$ are used. For such standard values the load may also be read directly from Fig. 1-12 which was constructed from loads computed by Eq 9. The loads in Fig. 1-12 are based on soil weighing 110 lb/cu ft and may be adjusted to soil of 120 lb/cu ft by multiplying the graph load by 120/110. For calculation of pipe thicknesses, special load factors are used for positive projection embankment condition as shown in Table 1-9.

1-3.2.3—*Negative-Projection Embankment Condition*

The negative-projection embankment condition may be encountered in highway or dam construction when the pipe is laid in a relatively narrow trench cut in the subgrade, a more desirable method than installation directly on top of the subgrade. Loads for negative projection are calculated as follows.

$$W_e = C_n w B_d^2 \qquad (14)$$

in which:

C_n = calculation coefficient (negative projection condition).

Other terms are as defined for Eq 8 and 9.

The calculation coefficient, C_n, is read from Fig. 1-14 after the values of p' and H/B_d have been determined as follows:

$p' = h/B_d$

h = depth of cover in trench from top of pipe to subgrade (ft)

H = total height of fill from top of pipe to top of embankment (ft)

B_d = width of subgrade trench at top of pipe (ft)

Equation 14 is considered to give the maximum load that could occur on pipe laid in trenches under embankment conditions such as the case of embankment or additional fill added at some time, generally years, after the pipe was laid as a ditch conduit and backfill placed. In many embankment cases, Eq 14 may give loads which are too conservative.

In cases where pipe is laid in a subgrade trench with the embankment completed shortly thereafter, the load may be closer to that given by Eq 8 for ditch condition, and the embankment fill above the subgrade trench may be considered as equivalent to an increase of the trench width above the top of the pipe without significant effect on the earth load.

For other cases the load may lie somewhere between those given by Eq 8 and Eq 14. The correct load depends largely on relative soil compaction in the subgrade trench and overlying embankment and selection of the proper load for pipe design will be governed by engineering judgment based on the specific factors in each installation.

1-3.2.4—*Sample Calculation of Earth Load*

Determine earth load on 12-in. cast-iron pipe with 5 ft of cover. Pipe laid

e = the base of natural logarithms (2.71828)

H = depth of cover to top of pipe (ft).

The calculation coefficient, C_c, is obtained from Fig. 1–9 or from the following equation:

$$C_c = \frac{e^{2K\mu \frac{H}{B_c}} - 1}{2K\mu} \qquad (11)$$

or

$$C_c = \frac{e^{2K\mu \frac{H_e}{B_c}} - 1}{2K\mu} + \left(\frac{H}{B_c} - \frac{H_e}{B_c}\right) e^{2K\mu \frac{H_e}{B_c}} \qquad (12)$$

in which:

μ = coefficient of internal friction in fill materials

$K\mu$ = 0.1924 for standard calculations

H_e = Height of equal settlement (ft) (vertical height from the top of conduit to the level at and above which the fill materials directly over the conduit settle equally with the adjacent fill materials).

Equation 11 is used when the height of fill, H, is equal to or less than the height of equal settlement, H_e. Equation 12 is used when the height of fill, H, is greater than the height of equal settlement, H_e.

The height of equal settlement, H_e, is obtained from the following equation:

$$e^{2K\mu \frac{H_e}{B_c}} - 2K\mu \frac{H_e}{B_c} = 2K\mu(r_{sd}p) + 1 \qquad (13)$$

in which:

r_{sd} = settlement ratio*

p = projection ratio*

For standard calculations the value of the product $r_{sd}p$ is taken to be 0.75. For this value, the height of equal settlement calculated by Eq 13 is, $H_e = 1.75\ B_c$ and Eq 12 reduces to:

$$C_c = 1.961 \frac{H}{B_c} - 0.934 \qquad (12a)$$

In most cases Eq 12a is used to calculate C_c becuase the depth of cover usually exceeds 1.75 times the pipe outside diameter.

Table 1–8 and Fig. 1–10 show earth loads computed by the above procedures for cast-iron pipe laid in trenches with widths, B_d, equal to the nominal pipe diameter plus 2 ft. Figure 1–11 shows a chart of earth loads computed by the above procedures for pipe installed in trenches where B_d is equal to the nominal pipe diameter plus 1 ft.

Figures 1–12 and 1–13 show charts computed by the above procedures for pipe laid in trenches with sides sloped 1:1 and 2:1, respectively.

For standard calculations, $K\mu = 0.1924$ is used for C_c and $K\mu' = 0.130$ is used for C_d in order to obtain conservative earth loads. Other values of $K\mu$ and $K\mu'$, which may be used in calculating earth loads for special soil conditions, are shown below with the corresponding soil type:

Soil Type	Value of $K\mu$ or $K\mu'$
Granular materials without cohesion	0.1924
Sand and gravel, maximum	0.165

* For a definition of these terms see: SPANGLER, M. G. *Soil Engineering*. International Textbook Co., Scranton, Pa. (2nd ed., 1960). p. 403.

TABLE 1–1 (*Continued*)

Schedule of Barrel Thickness for Water Pipe of 18/40 Iron Strength

Laying Condition	Depth of Cover ft	Thickness Specifications	Internal Pressure—psi: 50	100	150	200	250	300	350
			Barrel Thicknesses—in.						
Thirty-six-Inch Water Pipe									
A	2½	Calculated Thickness	.94*	.98*	1.02*	1.07*	1.13*	1.19*	1.27
		Use Thickness Class	23	24	24	25	25	26	27
		Use Thickness	.94	1.02	1.02	1.10	1.10	1.19	1.29
	3½	Calculated Thickness	.93*	.97*	1.02*	1.07*	1.12*	1.19	1.31
		Use Thickness Class	23	23	24	25	25	26	27
		Use Thickness	.94	.94	1.02	1.10	1.10	1.19	1.29
	5	Calculated Thickness	.98*	1.02*	1.07*	1.12*	1.17*	1.26	1.35
		Use Thickness Class	24	24	25	25	26	27	28
		Use Thickness	1.02	1.02	1.10	1.10	1.19	1.29	1.39
	8	Calculated Thickness	1.07*	1.11*	1.16	1.22	1.28	1.36	1.44
		Use Thickness Class	25	25	26	26	27	28	28
		Use Thickness	1.10	1.10	1.19	1.19	1.29	1.39	1.39
	12	Calculated Thickness	1.19	1.24	1.28	1.34	1.40	1.47	1.54
		Use Thickness Class	26	27	27	28	28	29	29
		Use Thickness	1.19	1.29	1.29	1.39	1.39	1.50	1.50
	1	Calculated Thickness	1.29	1.33	1.38	1.43	1.49	1.55	1.62
		Use Thickness Class	27	27	28	28	29	29	30
		Use Thickness	1.29	1.29	1.39	1.39	1.50	1.50	1.62
B	2½	Calculated Thickness	.82*	.86*	.91*	.97*	1.03*	1.14	1.26
		Use Thickness Class	21	22	23	23	24	25	27
		Use Thickness	.81	.87	.94	.94	1.02	1.10	1.29
	3½	Calculated Thickness	.81*	.85*	.90*	.96*	1.04	1.15	1.28
		Use Thickness Class	21	22	22	23	24	26	27
		Use Thickness	.81	.87	.87	.94	1.02	1.19	1.29
	5	Calculated Thickness	.86*	.90*	.94*	1.01	1.10	1.20	1.30
		Use Thickness Class	22	22	23	24	25	26	27
		Use Thickness	.87	.87	.94	1.02	1.10	1.19	1.29
	8	Calculated Thickness	.94	.99	1.05	1.11	1.18	1.27	1.36
		Use Thickness Class	23	24	24	25	26	27	28
		Use Thickness	.94	1.02	1.02	1.10	1.19	1.29	1.39
	12	Calculated Thickness	1.05	1.09	1.14	1.20	1.27	1.34	1.43
		Use Thickness Class	24	25	25	26	27	28	28
		Use Thickness	1.02	1.10	1.10	1.19	1.29	1.39	1.39
	16	Calculated Thickness	1.12	1.17	1.22	1.27	1.34	1.40	1.48
		Use Thickness Class	25	26	26	27	28	28	29
		Use Thickness	1.10	1.19	1.19	1.29	1.39	1.39	1.50
F	2½	Calculated Thickness	.73*	.79*	.84*	.89	1.01	1.13	1.25
		Use Thickness Class	21	21	22	22	24	25	27
		Use Thickness	.81	.81	.87	.87	1.02	1.10	1.29
	3½	Calculated Thickness	.73*	.78*	.83*	.92	1.03	1.14	1.26
		Use Thickness Class	21	21	21	23	24	25	27
		Use Thickness	.81	.81	.81	.94	1.02	1.10	1.29
	5	Calculated Thickness	.78*	.82*	.89	.97	1.07	1.17	1.28
		Use Thickness Class	21	21	22	23	25	26	27
		Use Thickness	.81	.81	.87	.94	1.10	1.19	1.29
	8	Calculated Thickness	.86	.91	.97	1.04	1.13	1.22	1.33
		Use Thickness Class	22	23	23	24	25	26	27
		Use Thickness	.87	.94	.94	1.02	1.10	1.19	1.29
	12	Calculated Thickness	.95	1.00	1.06	1.12	1.20	1.28	1.37
		Use Thickness Class	23	24	25	25	26	27	28
		Use Thickness	.94	1.02	1.10	1.10	1.19	1.29	1.39
	16	Calculated Thickness	1.02	1.07	1.12	1.18	1.25	1.33	1.42
		Use Thickness Class	24	25	25	26	27	27	28
		Use Thickness	1.02	1.10	1.10	1.19	1.29	1.29	1.39

* Asterisk following total calculated thickness indicates that truck superload (Case 2) is the controlling factor. When total calculated thickness is not followed by asterisk, surge pressure (Case 1) is the controlling factor. See Sec. 1–2.1.

TABLE 1-1 (*Continued*)

Schedule of Barrel Thickness for Water Pipe of 18/40 Iron Strength

Laying Condition	Depth of Cover *ft*	Thickness Specifications	Internal Pressure—*psi* 50	100	150	200	250	300	350
			Barrel Thicknesses—*in.*						
Forty-two-Inch Water Pipe									
A	2½	Calculated Thickness	*1.04**	*1.08**	*1.14**	*1.20**	*1.27**	*1.34**	*1.43*
		Use Thickness Class	23	23	24	25	26	26	27
		Use Thickness	1.05	1.05	1.13	1.22	1.32	1.32	1.43
	3½	Calculated Thickness	*1.04**	*1.08**	*1.14**	*1.20**	*1.27**	*1.33*	*1.46*
		Use Thickness Class	23	23	24	25	26	26	27
		Use Thickness	1.05	1.05	1.13	1.22	1.32	1.32	1.43
	5	Calculated Thickness	*1.09**	*1.14**	*1.19**	*1.25**	*1.32**	*1.43*	*1.52*
		Use Thickness Class	24	24	25	25	26	27	28
		Use Thickness	1.13	1.13	1.22	1.22	1.32	1.43	1.54
	8	Calculated Thickness	*1.19**	*1.24**	*1.30*	*1.37*	*1.45*	*1.53*	*1.63*
		Use Thickness Class	25	25	26	26	27	28	29
		Use Thickness	1.22	1.22	1.32	1.32	1.43	1.54	1.66
	12	Calculated Thickness	*1.33*	*1.38*	*1.44*	*1.50*	*1.58*	*1.65*	*1.74*
		Use Thickness Class	26	27	27	28	28	29	30
		Use Thickness	1.32	1.43	1.43	1.54	1.54	1.66	1.79
	16	Calculated Thickness	*1.46*	*1.51*	*1.56*	*1.62*	*1.68*	*1.75*	*1.83*
		Use Thickness Class	27	28	28	29	29	30	30
		Use Thickness	1.43	1.54	1.54	1.66	1.66	1.79	1.79
B	2½	Calculated Thickness	*.89**	*.94**	*1.00**	*1.07**	*1.14*	*1.28*	*1.42*
		Use Thickness Class	21	22	22	23	24	26	27
		Use Thickness	.90	.97	.97	1.05	1.13	1.32	1.43
	3½	Calculated Thickness	*.89**	*.94**	*1.00**	*1.07**	*1.17*	*1.30*	*1.43*
		Use Thickness Class	21	22	22	23	24	26	27
		Use Thickness	.90	.97	.97	1.05	1.13	1.32	1.43
	5	Calculated Thickness	*.94**	*.98**	*1.04**	*1.13*	*1.23*	*1.34*	*1.47*
		Use Thickness Class	22	22	23	24	25	26	27
		Use Thickness	.97	.97	1.05	1.13	1.22	1.32	1.43
	8	Calculated Thickness	*1.04*	*1.09*	*1.16*	*1.23*	*1.32*	*1.42*	*1.53*
		Use Thickness Class	23	24	24	25	26	27	28
		Use Thickness	1.05	1.13	1.13	1.22	1.32	1.43	1.54
	12	Calculated Thickness	*1.15*	*1.21*	*1.27*	*1.33*	*1.42*	*1.51*	*1.60*
		Use Thickness Class	24	25	26	26	27	28	29
		Use Thickness	1.13	1.22	1.32	1.32	1.43	1.54	1.66
	16	Calculated Thickness	*1.25*	*1.30*	*1.36*	*1.43*	*1.50*	*1.58*	*1.67*
		Use Thickness Class	25	26	26	27	28	28	29
		Use Thickness	1.22	1.32	1.32	1.43	1.54	1.54	1.66
F	2½	Calculated Thickness	*.80**	*.86**	*.92**	*1.00*	*1.15*	*1.28*	*1.42*
		Use Thickness Class	21	21	21	22	24	26	27
		Use Thickness	.90	.90	.90	.97	1.13	1.32	1.43
	3½	Calculated Thickness	*.80**	*.86**	*.92**	*1.04*	*1.17*	*1.29*	*1.43*
		Use Thickness Class	21	21	21	23	24	26	27
		Use Thickness	.90	.90	.90	1.05	1.13	1.32	1.43
	5	Calculated Thickness	*.85**	*.90**	*.98*	*1.08*	*1.19*	*1.32*	*1.45*
		Use Thickness Class	21	21	22	23	25	26	27
		Use Thickness	.90	.90	.97	1.05	1.22	1.32	1.43
	8	Calculated Thickness	*.94*	*1.00*	*1.08*	*1.16*	*1.26*	*1.36*	*1.49*
		Use Thickness Class	22	22	23	24	25	26	28
		Use Thickness	.97	.97	1.05	1.13	1.22	1.32	1.54
	12	Calculated Thickness	*1.05*	*1.10*	*1.17*	*1.25*	*1.34*	*1.43*	*1.54*
		Use Thickness Class	23	24	24	25	26	27	28
		Use Thickness	1.05	1.13	1.13	1.22	1.32	1.43	1.54
	16	Calculated Thickness	*1.13*	*1.18*	*1.24*	*1.32*	*1.40*	*1.49*	*1.59*
		Use Thickness Class	24	25	25	26	27	28	28
		Use Thickness	1.13	1.22	1.22	1.32	1.43	1.54	1.54

* Asterisk following total calculated thickness indicates that truck superload (Case 2) is the controlling factor. When total calculated thickness is not followed by asterisk, surge pressure (Case 1) is the controlling factor. See Sec. 1-2.1.

A graphical method may also be used for determining thicknesses for conditions not covered in the nomograms in Fig. 1-1 through 1-5. The parabolic graphical method is described in Sec. 1-12.3 of ASA A21.1-1957 (AWWA H1-57).

Sec. 1-3.2—Earth Loads (W_e)

For computation of earth loads on cast-iron pipe the type of installation is identified as shown in Fig. 1-7. Ditch condition (Fig. 1-7a, b, c) denotes pipe laid in a relatively narrow trench and backfilled to the original ground surface. The trench width at the top of the pipe determines the load and the ditch may be widened above the top of the pipe for installation convenience (Fig. 1-7 b, c) without increasing the load on the pipe. Embankment condition includes two types of installation: positive projection condition (Fig. 1-7d) which denotes pipe laid on top of a subgrade and covered with fill, and negative projection condition (Fig. 1-7e) which denotes pipe laid in a trench in the subgrade and covered with fill, which extends substantially above the subgrade. Methods for calculating earth loads for these three installation conditions are given below:

1-3.2.1—*Ditch Condition*

The ditch condition is the most common method of installing cast-iron pipe and is the basis of the earth loads shown in Table 1-8. The load is obtained by selecting the lesser of the two loads computed by Eq 8 and 9.

$$W_e = C_d w B_d^2 \quad \text{(Ditch Condition)} \qquad (8)$$

$$W_e = C_e w B_c^2 \quad \text{(Positive Projection Condition)} \qquad (9)$$

in which:

W_e = earth load, lb per linear ft
C_d = calculation coefficient, ditch condition
C_e = calculation coefficient, positive projection condition
w = soil density (120 lb/cu ft assumed in standard calculations)
B_d = width of trench at top of pipe (ft) (for standard calculations use nominal pipe diameter plus 2 ft)
B_c = outside diameter of pipe, ft.

This procedure was established by work done at Iowa State College,* which proved that for certain combinations of pipe size, trench width, and depth of cover, the load given by Eq 9 for positive projection condition should be used when it is the lesser of the two loads even though the pipe is laid in a trench.

The calculation coefficient, C_d, is obtained from Fig. 1-8 or from the following equation:

$$C_d = \frac{1 - e^{-2K\mu' \frac{H}{B_d}}}{2K\mu'} \qquad (10)$$

in which:

K = ratio of active horizontal pressure at any point in the fill to the vertical pressure which causes the active horizontal pressure
μ' = coefficient of sliding friction between fill materials and sides of trench
$K\mu'$ = 0.130 for standard calculations

* SPANGLER, M. G. *Soil Engineering*. International Textbook Co., Scranton, Pa. (2nd ed., 1960). p. 416.

load plus truck superload) to an equivalent load in the laboratory ring test. Table 1–4 gives values of w computed from Eq 4 and 5 for standard depths of cover using the earth loads and truck superloads in Table 1–8 and the load factors in Table 1–9.

The design values of p to be used in solving Eq 1, either by nomogram or by trial calculation, are determined as follows:

For Case 1,

$$p = 2.5\,(p_w + p_s) \qquad (6)$$

For Case 2,

$$p = 2.5\,p_w \qquad (7)$$

in which:

p = internal pressure (psi), including a 2.5 safety factor
p_w = working pressure (psi)
p_s = allowance for surge pressure (psi) (Table 1–10)
2.5 = safety factor.

Table 1–5 gives values of p computed by Eq 6 and 7 for standard working pressures using the allowances for surge pressure in Table 1–10.

As described in Sec. 1–2.2, calculations for net thickness for water pipe are made for two conditions of combined loading: Case 1, which includes surge pressure but not truck superload; and Case 2, which includes truck superload but not surge pressure. The larger of the two thicknesses is used for design. Truck superload and surge pressure are transient and occasional loads, and it is considered extremely unlikely that they will occur simultaneously.

When Eq 2 and 3 are substituted in Eq 1, the result is a high-order equation which cannot be solved directly for the net thickness t by conventional mathematical procedure. It is necessary to resort to graphical solution or to successive approximation. The more convenient method for routine work is to use a nomogram as shown in Fig. 1–1 through 1–5. Such nomograms are prepared by the following steps:

a. Using the appropriate iron strength values of S and R, calculate W and P for a series of thicknesses for each pipe size by means of Eq 2 and 3.

b. For each thickness select two values of p and compute the corresponding values of w using Eq 1.

c. Set up parallel scales for w and p, using linear increments for the p scale and increments proportional to the square of the load for the w scale.

d. Using a straightedge to connect the corresponding values of w and p, locate and mark the intersection of the two lines determined by the two sets of values for each thickness.

e. Repeat for the full series of thicknesses to lay out the curve for each pipe size.

If it is desired to determine net thickness for iron strengths or loads and pressures not covered in the nomograms in Fig. 1–1 through 1–5, a trial calculation method may be used to solve Eq 1, as follows:

a. Based on the values of w and p corresponding to the design conditions, assume a trial value of t.

b. Using the known iron strength values S and R and the trial value of t, calculate W and P from Eq 2 and 3.

c. Using these values of W and P and the design value of p, solve Eq 1 for w.

d. Compare this calculated value of w to the design value of w and assume a smaller or larger value of t, as required, for the second trial calculation.

e. Continue until a change in assumed thickness of less than 0.01 in. results in a calculated w equal to or greater than the design w.

TABLE 1–1 (*Continued*)

Schedule of Barrel Thickness for Water Pipe of 18/40 Iron Strength

Laying Condition	Depth of Cover ft	Thickness Specifications	Internal Pressure—psi: 50	100	150	200	250	300	350
			Barrel Thicknesses—in.						
Forty-eight-Inch Water Pipe									
A	2½	Calculated Thickness	*1.14**	*1.19**	*1.25**	*1.32**	*1.40**	*1.49**	*1.61*
		Use Thickness Class	23	24	24	25	26	26	27
		Use Thickness	1.14	1.23	1.23	1.33	1.44	1.44	1.56
	3½	Calculated Thickness	*1.14**	*1.20**	*1.26**	*1.33**	*1.40**	*1.50*	*1.66*
		Use Thickness Class	23	24	24	25	26	27	28
		Use Thickness	1.14	1.23	1.23	1.33	1.44	1.56	1.68
	5	Calculated Thickness	*1.22**	*1.27**	*1.32**	*1.39**	*1.47*	*1.58*	*1.71*
		Use Thickness Class	24	24	25	26	26	27	28
		Use Thickness	1.23	1.23	1.33	1.44	1.44	1.56	1.68
	8	Calculated Thickness	*1.33**	*1.38**	*1.44*	*1.53*	*1.61*	*1.71*	*1.83*
		Use Thickness Class	25	25	26	27	27	28	29
		Use Thickness	1.33	1.33	1.44	1.56	1.56	1.68	1.81
	12	Calculated Thickness	*1.49*	*1.55*	*1.61*	*1.69*	*1.77*	*1.85*	*1.96*
		Use Thickness Class	26	27	27	28	29	29	30
		Use Thickness	1.44	1.56	1.56	1.68	1.81	1.81	1.95
	16	Calculated Thickness	*1.63*	*1.68*	*1.74*	*1.81*	*1.89*	*1.98*	*2.08*
		Use Thickness Class	28	28	28	29	30	30	
		Use Thickness	1.68	1.68	1.68	1.81	1.95	1.95	
B	2½	Calculated Thickness	*.97**	*1.03**	*1.09**	*1.17**	*1.28*	*1.43*	*1.59*
		Use Thickness Class	21	22	22	23	25	26	27
		Use Thickness	.98	1.06	1.06	1.14	1.33	1.44	1.56
	3½	Calculated Thickness	*.98**	*1.03**	*1.10**	*1.17*	*1.31*	*1.45*	*1.61*
		Use Thickness Class	21	22	23	23	25	26	27
		Use Thickness	.98	1.06	1.14	1.14	1.33	1.44	1.56
	5	Calculated Thickness	*1.03**	*1.09**	*1.15**	*1.25*	*1.37*	*1.50*	*1.65*
		Use Thickness Class	22	22	23	24	25	27	28
		Use Thickness	1.06	1.06	1.14	1.23	1.33	1.56	1.68
	8	Calculated Thickness	*1.13*	*1.20*	*1.28*	*1.37*	*1.47*	*1.58*	*1.72*
		Use Thickness Class	23	24	25	25	26	27	28
		Use Thickness	1.14	1.23	1.33	1.33	1.44	1.56	1.68
	12	Calculated Thickness	*1.28*	*1.34*	*1.41*	*1.49*	*1.58*	*1.69*	*1.80*
		Use Thickness Class	25	25	26	26	27	28	29
		Use Thickness	1.33	1.33	1.44	1.44	1.56	1.68	1.81
	16	Calculated Thickness	*1.38*	*1.43*	*1.50*	*1.58*	*1.67*	*1.77*	*1.87*
		Use Thickness Class	25	26	27	27	28	29	29
		Use Thickness	1.33	1.44	1.56	1.56	1.68	1.81	1.81
F	2½	Calculated Thickness	*.88**	*.93**	*1.00**	*1.12*	*1.27*	*1.43*	*1.59*
		Use Thickness Class	21	21	21	23	24	26	27
		Use Thickness	.98	.98	.98	1.14	1.23	1.44	1.56
	3½	Calculated Thickness	*.88**	*.94**	*1.01**	*1.14*	*1.29*	*1.44*	*1.60*
		Use Thickness Class	21	21	21	23	25	26	27
		Use Thickness	.98	.98	.98	1.14	1.33	1.44	1.56
	5	Calculated Thickness	*.93**	*.99**	*1.08*	*1.20*	*1.33*	*1.48*	*1.63*
		Use Thickness Class	21	21	22	24	25	26	28
		Use Thickness	.98	.98	1.06	1.23	1.33	1.44	1.68
	8	Calculated Thickness	*1.03*	*1.10*	*1.19*	*1.28*	*1.40*	*1.52*	*1.67*
		Use Thickness Class	22	23	24	25	26	27	28
		Use Thickness	1.06	1.14	1.23	1.33	1.44	1.56	1.68
	12	Calculated Thickness	*1.15*	*1.22*	*1.29*	*1.39*	*1.48*	*1.60*	*1.73*
		Use Thickness Class	23	24	25	26	26	27	28
		Use Thickness	1.14	1.23	1.33	1.44	1.44	1.56	1.68
	16	Calculated Thickness	*1.25*	*1.31*	*1.38*	*1.46*	*1.56*	*1.67*	*1.78*
		Use Thickness Class	24	25	25	26	27	28	29
		Use Thickness	1.23	1.33	1.33	1.44	1.56	1.68	1.81

* Asterisk following total calculated thickness indicates that truck superload (Case 2) is the controlling factor. When total calculated thickness is not followed by asterisk, surge pressure (Case 1) is the controlling factor. See Sec. 1–2.1.

TABLE 1–2

Schedule of Barrel Thickness for Water Pipe of 21/45 Iron Strength

Laying Condition	Depth of Cover *ft*	Thickness Specifications	Internal Pressure—*psi*						
			50	100	150	200	250	300	350
			Barrel Thickness—*in.*						
		Three-Inch Water Pipe							
A	2½	Calculated Thickness	0.20*	0.20*	0.20*	0.20*	0.21*	0.21*	0.21
		Use Thickness Class	22	22	22	22	22	22	22
		Use Thickness	0.32	0.32	0.32	0.32	0.32	0.32	0.32
	3½	Calculated Thickness	0.20*	0.20*	0.20*	0.21*	0.21*	0.22*	0.22
		Use Thickness Class	22	22	22	22	22	22	22
		Use Thickness	0.32	0.32	0.32	0.32	0.32	0.32	0.32
	5	Calculated Thickness	0.21	0.21	0.21	0.22	0.22	0.23	0.23
		Use Thickness Class	22	22	22	22	22	22	22
		Use Thickness	0.32	0.32	0.32	0.32	0.32	0.32	0.32
	8	Calculated Thickness	0.22	0.23	0.23	0.23	0.24	0.24	0.25
		Use Thickness Class	22	22	22	22	22	22	22
		Use Thickness	0.32	0.32	0.32	0.32	0.32	0.32	0.32
	12	Calculated Thickness	0.24	0.25	0.25	0.25	0.26	0.26	0.26
		Use Thickness Class	22	22	22	22	22	22	22
		Use Thickness	0.32	0.32	0.32	0.32	0.32	0.32	0.32
	16	Calculated Thickness	0.26	0.26	0.27	0.27	0.27	0.28	0.28
		Use Thickness Class	22	22	22	22	22	22	22
		Use Thickness	0.32	0.32	0.32	0.32	0.32	0.32	0.32
B	2½	Calculated Thickness	0.19*	0.20*	0.20*	0.20*	0.21	0.22	0.22
		Use Thickness Class	22	22	22	22	22	22	22
		Use Thickness	0.32	0.32	0.32	0.32	0.32	0.32	0.32
	3½	Calculated Thickness	0.19*	0.20*	0.20	0.21	0.21	0.22	0.22
		Use Thickness Class	22	22	22	22	22	22	22
		Use Thickness	0.32	0.32	0.32	0.32	0.32	0.32	0.32
	5	Calculated Thickness	0.21	0.21	0.21	0.21	0.22	0.22	0.23
		Use Thickness Class	22	22	22	22	22	22	22
		Use Thickness	0.32	0.32	0.32	0.32	0.32	0.32	0.32
	8	Calculated Thickness	0.22	0.22	0.22	0.23	0.23	0.24	0.24
		Use Thickness Class	22	22	22	22	22	22	22
		Use Thickness	0.32	0.32	0.32	0.32	0.32	0.32	0.32
	12	Calculated Thickness	0.24	0.24	0.24	0.25	0.25	0.25	0.26
		Use Thickness Class	22	22	22	22	22	22	22
		Use Thickness	0.32	0.32	0.32	0.32	0.32	0.32	0.32
	16	Calculated Thickness	0.25	0.26	0.26	0.26	0.27	0.27	0.27
		Use Thickness Class	22	22	22	22	22	22	22
		Use Thickness	0.32	0.32	0.32	0.32	0.32	0.32	0.32
F	2½	Calculated Thickness	0.19*	0.19*	0.19	0.20	0.20	0.21	0.22
		Use Thickness Class	22	22	22	22	22	22	22
		Use Thickness	0.32	0.32	0.32	0.32	0.32	0.32	0.32
	3½	Calculated Thickness	0.19*	0.19	0.19	0.20	0.20	0.21	0.22
		Use Thickness Class	22	22	22	22	22	22	22
		Use Thickness	0.32	0.32	0.32	0.32	0.32	0.32	0.32
	5	Calculated Thickness	0.19	0.20	0.20	0.21	0.21	0.22	0.22
		Use Thickness Class	22	22	22	22	22	22	22
		Use Thickness	0.32	0.32	0.32	0.32	0.32	0.32	0.32
	8	Calculated Thickness	0.21	0.21	0.21	0.22	0.22	0.23	0.23
		Use Thickness Class	22	22	22	22	22	22	22
		Use Thickness	0.32	0.32	0.32	0.32	0.32	0.32	0.32
	12	Calculated Thickness	0.22	0.22	0.23	0.23	0.24	0.24	0.25
		Use Thickness Class	22	22	22	22	22	22	22
		Use Thickness	0.32	0.32	0.32	0.32	0.32	0.32	0.32
	16	Calculated Thickness	0.24	0.24	0.24	0.25	0.25	0.25	0.26
		Use Thickness Class	22	22	22	22	22	22	22
		Use Thickness	0.32	0.32	0.32	0.32	0.32	0.32	0.32

* Asterisk following total calculated thickness indicates that truck superload (Case 2) is the controlling factor. When total calculated thickness is not followed by asterisk, surge pressure (Case 1) is the controlling factor. See Sec. 1–2.1.

Sec. 1–3—Design Theory—Determination of Net Thickness, Earth Load, and Truck Superload

Sec. 1–3.1—Determination of Net Thickness

Tests made for USAS Committee A21* showed that, when a pipe has both an external load applied in three-edge bearing (such as the laboratory ring test) and an internal pressure, the relation between external load and internal pressure at the point of breaking can be represented, with sufficient accuracy, by a parabola drawn as in Fig. 1–6.

The mathematical relationships expressed by the formula for the load-pressure curve are the basis for the whole system of pipe thickness calculations used in this standard.

The equation of the load-pressure parabola is:

$$w = W\sqrt{\frac{P - p}{P}} \qquad (1)$$

in which:

W = ring test crushing load with no internal pressure (lb/lin ft)

P = bursting pressure with no external load (psi)

p and w are any combination of internal pressure and external load which will just cause fracture.

The values of W and P are calculated as follows:

$$W = \frac{Rt^2}{0.0795(d + t)} \qquad (2)$$

$$P = \frac{2St}{d} \qquad (3)$$

* See Reference 3, "Foreword," p. v.

in which:

R = ring modulus of rupture (psi)

S = bursting tensile strength (psi)

t = net thickness (in.)

d = nominal pipe size (in.).

The symbols S and R denote the strength of the iron in the pipe and are based on periodic full-length bursting tests and ring tests as specified in USA Standards A21.6 (AWWA C106), A21.7, A21.8 (AWWA C108), and A21.9.

The design values of w to be used in solving Eq 1 either by nomogram or by trial calculation, are determined as follows:

For Case 1,

$$w = \frac{2.5W_e}{L_f} \qquad (4)$$

For Case 2,

$$w = \frac{2.5(W_e + W_t)}{L_f} \qquad (5)$$

in which:

w = ring test load equivalent of trench load (lb/lin ft), including a 2.5 safety factor

W_e = earth load (lb/ft) (Table 1–8 and Sec. 1–3.2)

W_t = truck superload (lb/ft) (Table 1–8 and Sec. 1–3.3)

L_f = load factor dependent on laying condition (Table 1–9)

2.5 = safety factor.

The load factor, L_f, converts the trench load (earth load only or earth

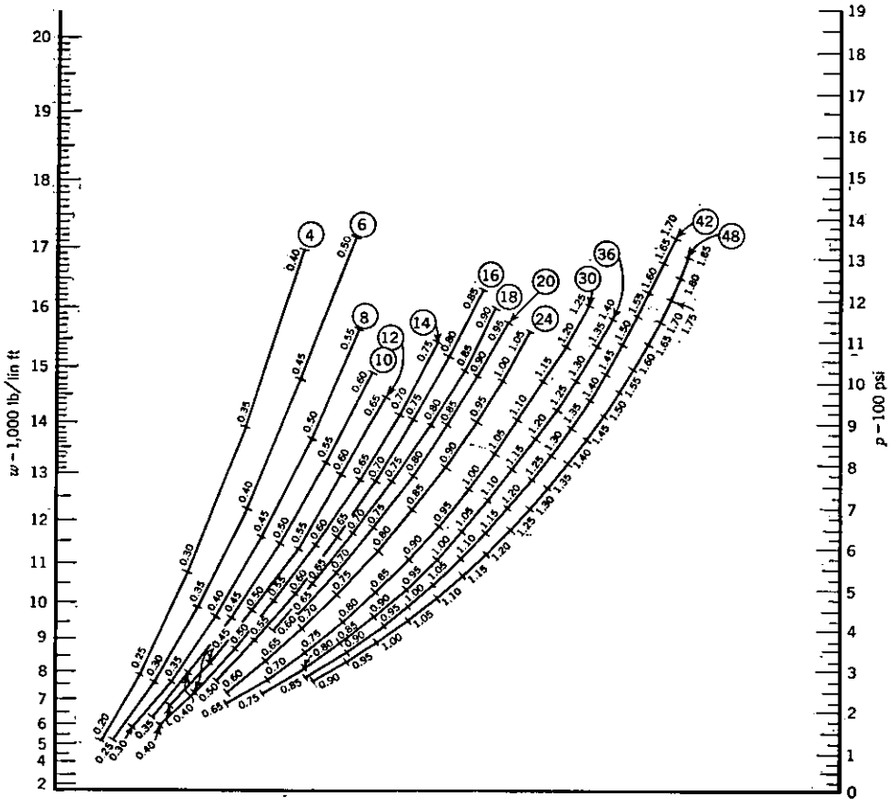

Fig. 1–5. Thickness Nomogram for Pipe of 21/45 Iron Strength, High-Range Load

Thicknesses are net, and computations are made using nominal pipe diameter for inside diameter. S *equals 21,000,* R *equals 45,000. The encircled values at the end of each curve are for pipe size, in inches.*

TABLE 1–2 (*Continued*)

Schedule of Barrel Thickness for Water Pipe of 21/45 Iron Strength

Laying Condition	Depth of Cover *ft*	Thickness Specifications	Internal Pressure—*psi* 50	100	150	200	250	300	350
			Barrel Thickness—*in.*						
Four-Inch Water Pipe									
A	2½	Calculated Thickness	0.22*	0.23*	0.23*	0.24*	0.24*	0.25*	0.25*
		Use Thickness Class	22	22	22	22	22	22	22
		Use Thickness	0.35	0.35	0.35	0.35	0.35	0.35	0.35
	3½	Calculated Thickness	0.22*	0.22*	0.23*	0.23*	0.24	0.25	0.26
		Use Thickness Class	22	22	22	22	22	22	22
		Use Thickness	0.35	0.35	0.35	0.35	0.35	0.35	0.35
	5	Calculated Thickness	0.23*	0.23*	0.24*	0.24*	0.25	0.26	0.26
		Use Thickness Class	22	22	22	22	22	22	22
		Use Thickness	0.35	0.35	0.35	0.35	0.35	0.35	0.35
	8	Calculated Thickness	0.25	0.26	0.26	0.27	0.27	0.28	0.28
		Use Thickness Class	22	22	22	22	22	22	22
		Use Thickness	0.35	0.35	0.35	0.35	0.35	0.35	0.35
	12	Calculated Thickness	0.28	0.28	0.29	0.29	0.29	0.30	0.31
		Use Thickness Class	22	22	22	22	22	22	22
		Use Thickness	0.35	0.35	0.35	0.35	0.35	0.35	0.35
	16	Calculated Thickness	0.30	0.30	0.31	0.31	0.32	0.32	0.33
		Use Thickness Class	22	22	22	22	22	22	22
		Use Thickness	0.35	0.35	0.35	0.35	0.35	0.35	0.35
B	2½	Calculated Thickness	0.22*	0.22*	0.23*	0.23*	0.24*	0.24*	0.24
		Use Thickness Class	22	22	22	22	22	22	22
		Use Thickness	0.35	0.35	0.35	0.35	0.35	0.35	0.35
	3½	Calculated Thickness	0.22*	0.22*	0.22*	0.23*	0.24	0.24	0.25
		Use Thickness Class	22	22	22	22	22	22	22
		Use Thickness	0.35	0.35	0.35	0.35	0.35	0.35	0.35
	5	Calculated Thickness	0.22	0.23	0.23	0.24	0.25	0.25	0.26
		Use Thickness Class	22	22	22	22	22	22	22
		Use Thickness	0.35	0.35	0.35	0.35	0.35	0.35	0.35
	8	Calculated Thickness	0.25	0.25	0.25	0.26	0.27	0.28	0.28
		Use Thickness Class	22	22	22	22	22	22	22
		Use Thickness	0.35	0.35	0.35	0.35	0.35	0.35	0.35
	12	Calculated Thickness	0.27	0.27	0.28	0.28	0.29	0.29	0.30
		Use Thickness Class	22	22	22	22	22	22	22
		Use Thickness	0.35	0.35	0.35	0.35	0.35	0.35	0.35
	16	Calculated Thickness	0.29	0.29	0.30	0.30	0.31	0.31	0.32
		Use Thickness Class	22	22	22	22	22	22	22
		Use Thickness	0.35	0.35	0.35	0.35	0.35	0.35	0.35
F	2½	Calculated Thickness	0.21*	0.21*	0.21*	0.22*	0.23	0.24	0.25
		Use Thickness Class	22	22	22	22	22	22	22
		Use Thickness	0.35	0.35	0.35	0.35	0.35	0.35	0.35
	3½	Calculated Thickness	0.20*	0.21	0.21	0.22	0.23	0.24	0.25
		Use Thickness Class	22	22	22	22	22	22	22
		Use Thickness	0.35	0.35	0.35	0.35	0.35	0.35	0.35
	5	Calculated Thickness	0.21	0.22	0.22	0.23	0.24	0.25	0.25
		Use Thickness Class	22	22	22	22	22	22	22
		Use Thickness	0.35	0.35	0.35	0.35	0.35	0.35	0.35
	8	Calculated Thickness	0.23	0.24	0.24	0.25	0.25	0.26	0.27
		Use Thickness Class	22	22	22	22	22	22	22
		Use Thickness	0.35	0.35	0.35	0.35	0.35	0.35	0.35
	12	Calculated Thickness	0.25	0.26	0.26	0.27	0.27	0.28	0.28
		Use Thickness Class	22	22	22	22	22	22	22
		Use Thickness	0.35	0.35	0.35	0.35	0.35	0.35	0.35
	16	Calculates Thickness	0.27	0.27	0.28	0.28	0.29	0.29	0.30
		Use Thickness Class	22	22	22	22	22	22	22
		Use Thickness	0.35	0.35	0.35	0.35	0.35	0.35	0.35

* Asterisk following total calculated thickness indicates that truck superload (Case 2) is the controlling factor. When total calculated thickness is not followed by asterisk, surge pressure (Case 1) is the controlling factor. See Sec. 1–2.1.

TABLE 1–2 (*Continued*)

Schedule of Barrel Thickness for Water Pipe of 21/45 Iron Strength

Laying Condition	Depth of Cover *ft*	Thickness Specifications	Internal Pressure—*psi* 50	100	150	200	250	300	350
			Barrel Thickness—*in.*						
		Six-Inch Water Pipe							
A	2½	Calculated Thickness	0.23*	0.28*	0.29*	0.30*	0.30*	0.31*	0.32*
		Use Thickness Class	21	21	21	21	21	21	21
		Use Thickness	0.35	0.35	0.35	0.35	0.35	0.35	0.35
	3½	Calculated Thickness	0.27*	0.27*	0.28*	0.29*	0.29*	0.30*	0.32
		Use Thickness Class	21	21	21	21	21	21	21
		Use Thickness	0.35	0.35	0.35	0.35	0.35	0.35	0.35
	5	Calculated Thickness	0.28*	0.28*	0.29	0.30	0.31	0.32	0.33
		Use Thickness Class	21	21	21	21	21	21	21
		Use Thickness	0.35	0.35	0.35	0.35	0.35	0.35	0.35
	8	Calculated Thickness	0.31	0.31	0.32	0.33	0.34	0.35	0.36
		Use Thickness Class	21	21	21	21	21	21	21
		Use Thickness	0.35	0.35	0.35	0.35	0.35	0.35	0.35
	12	Calculated Thickness	0.34	0.35	0.36	0.36	0.37	0.38	0.39
		Use Thickness Class	21	21	21	21	22	22	22
		Use Thickness	0.35	0.35	0.35	0.35	0.38	0.38	0.38
	16	Calculated Thickness	0.38	0.38	0.39	0.39	0.40	0.41	0.42
		Use Thickness Class	22	22	22	22	23	23	23
		Use Thickness	0.38	0.38	0.38	0.38	0.41	0.41	0.41
B	2½	Calculated Thickness	0.27*	0.27*	0.28*	0.29*	0.29*	0.30*	0.31*
		Use Thickness Class	21	21	21	21	21	21	21
		Use Thickness	0.35	0.35	0.35	0.35	0.35	0.35	0.35
	3½	Calculated Thickness	0.26*	0.27*	0.27*	0.28*	0.29*	0.30	0.31
		Use Thickness Class	21	21	21	21	21	21	21
		Use Thickness	0.35	0.35	0.35	0.35	0.35	0.35	0.35
	5	Calculated Thickness	0.27*	0.27*	0.28*	0.29	0.30	0.31	0.32
		Use Thickness Class	21	21	21	21	21	21	21
		Use Thickness	0.35	0.35	0.35	0.35	0.35	0.35	0.35
	8	Calculated Thickness	0.30	0.30	0.31	0.32	0.33	0.34	0.35
		Use Thickness Class	21	21	21	21	21	21	21
		Use Thickness	0.35	0.35	0.35	0.35	0.35	0.35	0.35
	12	Calculated Thickness	0.33	0.34	0.34	0.35	0.36	0.37	0.38
		Use Thickness Class	21	21	21	21	21	22	22
		Use Thickness	0.35	0.35	0.35	0.35	0.35	0.38	0.38
	16	Calculated Thickness	0.36	0.37	0.37	0.38	0.39	0.39	0.40
		Use Thickness Class	21	22	22	22	22	22	23
		Use Thickness	0.35	0.38	0.38	0.38	0.38	0.38	0.41
F	2½	Calculated Thickness	0.25*	0.26*	0.26*	0.27*	0.28*	0.29*	0.30
		Use Thickness Class	21	21	21	21	21	21	21
		Use Thickness	0.35	0.35	0.35	0.35	0.35	0.35	0.35
	3½	Calculated Thickness	0.24*	0.25*	0.25	0.26	0.28	0.29	0.31
		Use Thickness Class	21	21	21	21	21	21	21
		Use Thickness	0.35	0.35	0.35	0.35	0.35	0.35	0.35
	5	Calculated Thickness	0.25	0.26	0.27	0.28	0.29	0.30	0.31
		Use Thickness Class	21	21	21	21	21	21	21
		Use Thickness	0.35	0.35	0.35	0.35	0.35	0.35	0.35
	8	Calculated Thickness	0.28	0.28	0.29	0.30	0.31	0.32	0.33
		Use Thickness Class	21	21	21	21	21	21	21
		Use Thickness	0.35	0.35	0.35	0.35	0.35	0.35	0.35
	12	Calculated Thickness	0.31	0.31	0.32	0.33	0.34	0.34	0.35
		Use Thickness Class	21	21	21	21	21	21	21
		Use Thickness	0.35	0.35	0.35	0.35	0.35	0.35	0.35
	16	Calculated Thickness	0.33	0.34	0.34	0.35	0.36	0.37	0.38
		Use Thickness Class	21	21	21	21	21	22	22
		Use Thickness	0.35	0.35	0.35	0.35	0.35	0.38	0.38

* Asterisk following total calculated thickness indicates that truck superload (Case 2) is the controlling factor. When total calculated thickness is not followed by asterisk, surge pressure (Case 1) is the controlling factor. See Sec. 1–2.1.

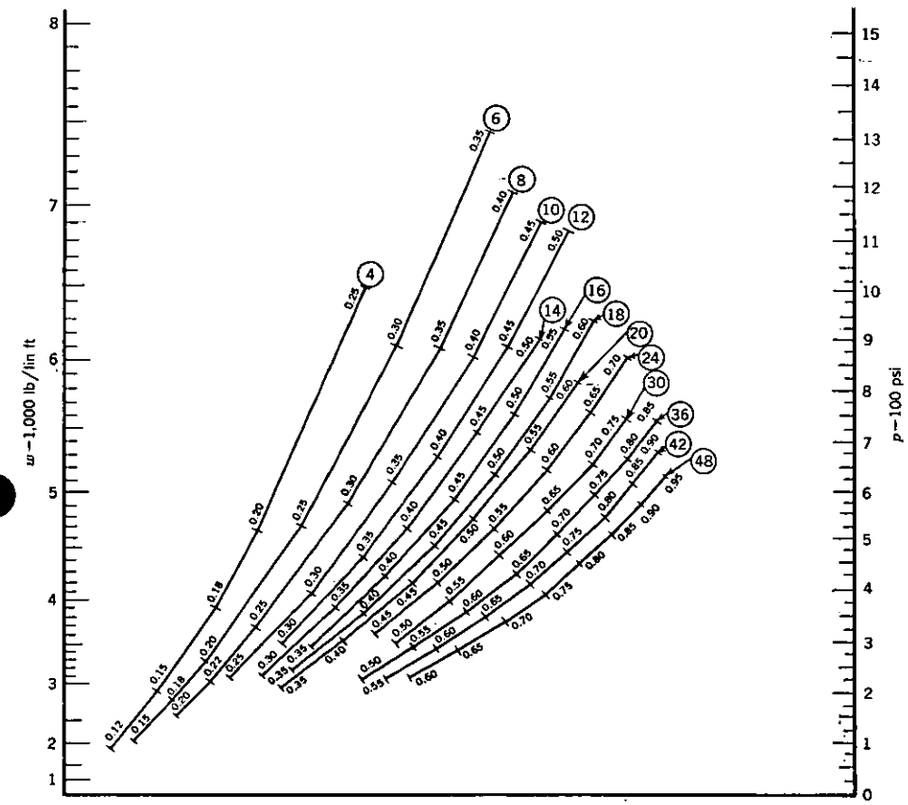

Fig. 1–4. Thickness Nomogram for Pipe of 21/45 Iron Strength, Medium-Range Load

Thicknesses are net, and computations are made using nominal pipe diameter for inside diameter. S equals 21,000. R equals 45,000. The encircled values at the end of each curve are for pipe size, in inches.

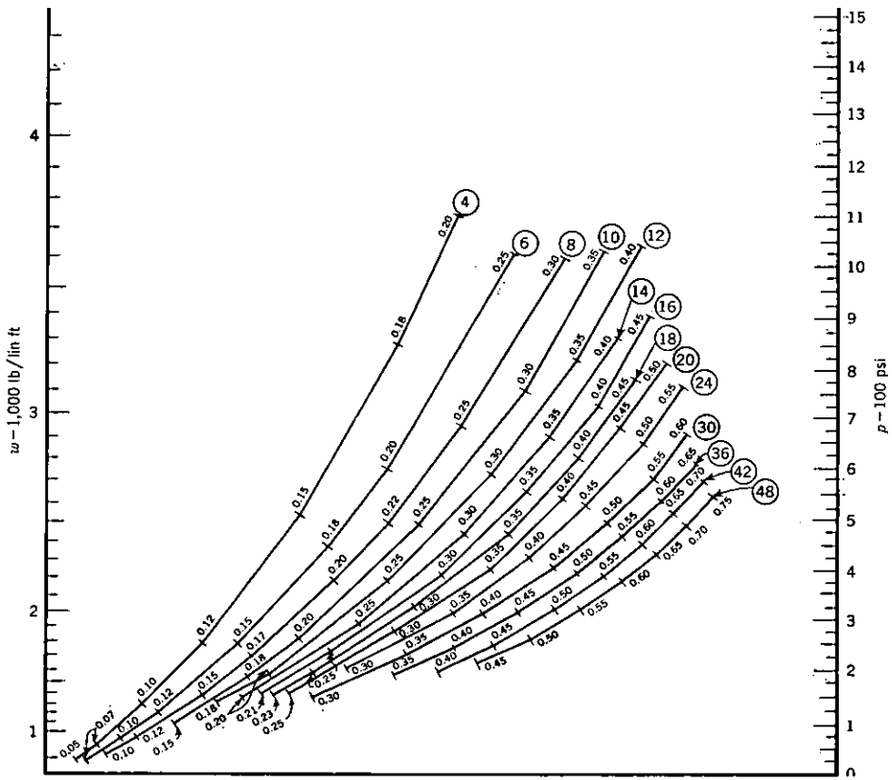

Fig. 1–3. Thickness Nomogram for Pipe of 21/45 Iron Strength, Low-Range Load

Thicknesses are net, and computations are made using nominal pipe diameter for inside diameter. S equals 21,000, R equals 45,000. The encircled values at the end of each curve are for pipe size, in inches.

TABLE 1–2 (*Continued*)

Schedule of Barrel Thickness for Water Pipe of 21/45 Iron Strength

Laying Condition	Depth of Cover *ft*	Thickness Specifications	Internal Pressure—*psi* 50	100	150	200	250	300	350
			Barrel Thickness—*in.*						
Eight-Inch Water Pipe									
A	2½	Calculated Thickness	0.33*	0.33*	0.34*	0.35*	0.36*	0.37*	0.38*
		Use Thickness Class	20	20	20	20	20	21	21
		Use Thickness	0.35	0.35	0.35	0.35	0.35	0.38	0.38
	3½	Calculated Thickness	0.32*	0.32*	0.33*	0.34*	0.35*	0.36*	0.38
		Use Thickness Class	20	20	20	20	20	20	21
		Use Thickness	0.35	0.35	0.35	0.35	0.35	0.35	0.38
	5	Calculated Thickness	0.32*	0.33*	0.34*	0.35	0.36	0.38	0.39
		Use Thickness Class	20	20	20	20	20	21	21
		Use Thickness	0.35	0.35	0.35	0.35	0.35	0.38	0.38
	8	Calculated Thickness	0.36	0.37	0.38	0.39	0.40	0.41	0.43
		Use Thickness Class	20	21	21	21	22	22	23
		Use Thickness	0.35	0.38	0.38	0.38	0.41	0.41	0.44
	12	Calculated Thickness	0.41	0.42	0.43	0.44	0.45	0.46	0.47
		Use Thickness Class	22	22	23	23	23	24	24
		Use Thickness	0.41	0.41	0.44	0.44	0.44	0.48	0.48
	16	Calculated Thickness	0.44	0.45	0.46	0.47	0.47	0.48	0.50
		Use Thickness Class	23	23	24	24	24	24	25
		Use Thickness	0.44	0.44	0.48	0.48	0.48	0.48	0.52
B	2½	Calculated Thickness	0.31*	0.32*	0.33*	0.34*	0.35*	0.36*	0.37*
		Use Thickness Class	20	20	20	20	20	20	21
		Use Thickness	0.35	0.35	0.35	0.35	0.35	0.35	0.38
	3½	Calculated Thickness	0.30*	0.31*	0.32*	0.33*	0.34*	0.35	0.37
		Use Thickness Class	20	20	20	20	20	20	21
		Use Thickness	0.35	0.35	0.35	0.35	0.35	0.35	0.38
	5	Calculated Thickness	0.31*	0.32*	0.33	0.34	0.35	0.37	0.38
		Use Thickness Class	20	20	20	20	20	21	21
		Use Thickness	0.35	0.35	0.35	0.35	0.35	0.38	0.38
	8	Calculated Thickness	0.35	0.35	0.36	0.37	0.39	0.40	0.41
		Use Thickness Class	20	20	20	21	21	22	22
		Use Thickness	0.35	0.35	0.35	0.38	0.38	0.41	0.41
	12	Calculated Thickness	0.39	0.40	0.41	0.42	0.43	0.44	0.45
		Use Thickness Class	21	22	22	22	23	23	23
		Use Thickness	0.38	0.41	0.41	0.41	0.44	0.44	0.44
	16	Calculated Thickness	0.42	0.43	0.44	0.44	0.45	0.46	0.48
		Use Thickness Class	22	23	23	23	23	24	24
		Use Thickness	0.41	0.44	0.44	0.44	0.44	0.48	0.48
F	2½	Calculated Thickness	0.29*	0.30*	0.30*	0.31*	0.32*	0.34	0.36
		Use Thickness Class	20	20	20	20	20	20	20
		Use Thickness	0.35	0.35	0.35	0.35	0.35	0.35	0.35
	3½	Calculated Thickness	0.28*	0.29*	0.30*	0.31*	0.33	0.35	0.36
		Use Thickness Class	20	20	20	20	20	20	20
		Use Thickness	0.35	0.35	0.35	0.35	0.35	0.35	0.35
	5	Calculated Thickness	0.29*	0.30	0.31	0.32	0.34	0.36	0.37
		Use Thickness Class	20	20	20	20	20	20	21
		Use Thickness	0.35	0.35	0.35	0.35	0.35	0.35	0.38
	8	Calculated Thickness	0.32	0.33	0.34	0.35	0.36	0.38	0.39
		Use Thickness Class	20	20	20	20	20	21	21
		Use Thickness	0.35	0.35	0.35	0.35	0.35	0.38	0.38
	12	Calculated Thickness	0.36	0.37	0.38	0.39	0.40	0.41	0.42
		Use Thickness Class	20	21	21	21	22	22	22
		Use Thickness	0.35	0.38	0.38	0.38	0.41	0.41	0.41
	16	Calculated Thickness	0.38	0.39	0.40	0.41	0.42	0.43	0.44
		Use Thickness Class	21	21	22	22	22	23	23
		Use Thickness	0.38	0.38	0.41	0.41	0.41	0.44	0.44

* Asterisk following total calculated thickness indicates that truck superload (Case 2) is the controlling factor. When total calculated thickness is not followed by asterisk, surge pressure (Case 1) is the controlling factor. See Sec. 1–2.1.

TABLE 1-2 (*Continued*)

Schedule of Barrel Thickness for Water Pipe of 21/45 Iron Strength

Laying Condition	Depth of Cover *ft*	Thickness Specifications	Internal Pressure—*psi* 50	100	150	200	250	300	350
			Barrel Thickness—*in.*						
		Ten-Inch Water Pipe							
A	2½	Calculated Thickness	0.38*	0.39*	0.40*	0.41*	0.42*	0.44*	0.45*
		Use Thickness Class	20	20	21	21	21	22	22
		Use Thickness	0.38	0.38	0.41	0.41	0.41	0.44	0.44
	3½	Calculated Thickness	0.37*	0.38*	0.39*	0.40*	0.41*	0.43*	0.44
		Use Thickness Class	20	20	20	21	21	22	22
		Use Thickness	0.38	0.38	0.38	0.41	0.41	0.44	0.44
	5	Calculated Thickness	0.38*	0.39*	0.40*	0.41	0.43	0.44	0.46
		Use Thickness Class	20	20	21	21	22	22	23
		Use Thickness	0.38	0.38	0.41	0.41	0.44	0.44	0.48
	8	Calculated Thickness	0.42	0.44	0.45	0.46	0.47	0.49	0.51
		Use Thickness Class	21	22	22	23	23	23	24
		Use Thickness	0.41	0.44	0.44	0.48	0.48	0.48	0.52
	12	Calculated Thickness	0.48	0.49	0.50	0.51	0.53	0.54	0.56
		Use Thickness Class	23	23	24	24	24	25	25
		Use Thickness	0.48	0.48	0.52	0.52	0.52	0.56	0.56
	16	Calculated Thickness	0.51	0.52	0.53	0.54	0.55	0.56	0.58
		Use Thickness Class	24	24	24	25	25	25	26
		Use Thickness	0.52	0.52	0.52	0.56	0.56	0.56	0.60
B	2½	Calculated Thickness	0.36*	0.37*	0.38*	0.39*	0.41*	0.42*	0.44*
		Use Thickness Class	20	20	20	20	21	21	22
		Use Thickness	0.38	0.38	0.38	0.38	0.41	0.41	0.44
	3½	Calculated Thickness	0.35*	0.36*	0.37*	0.39*	0.40*	0.41	0.44
		Use Thickness Class	20	20	20	20	21	21	22
		Use Thickness	0.38	0.38	0.38	0.38	0.41	0.41	0.44
	5	Calculated Thickness	0.36*	0.37*	0.38*	0.40	0.41	0.43	0.46
		Use Thickness Class	20	20	20	21	21	22	23
		Use Thickness	0.38	0.38	0.38	0.41	0.41	0.44	0.48
	8	Calculated Thickness	0.40	0.42	0.43	0.44	0.46	0.47	0.49
		Use Thickness Class	21	21	22	22	23	23	23
		Use Thickness	0.41	0.41	0.44	0.44	0.48	0.48	0.48
	12	Calculated Thickness	0.46	0.47	0.48	0.49	0.50	0.52	0.53
		Use Thickness Class	23	23	23	23	24	24	24
		Use Thickness	0.48	0.48	0.48	0.48	0.52	0.52	0.52
	16	Calculated Thickness	0.48	0.49	0.50	0.51	0.52	0.54	0.55
		Use Thickness Class	23	23	24	24	24	25	25
		Use Thickness	0.48	0.48	0.52	0.52	0.52	0.56	0.56
F	2½	Calculated Thickness	0.33*	0.34*	0.35*	0.37*	0.38*	0.40	0.43
		Use Thickness Class	20	20	20	20	20	21	22
		Use Thickness	0.38	0.38	0.38	0.38	0.38	0.41	0.44
	3½	Calculated Thickness	0.33*	0.33*	0.35*	0.36*	0.38	0.40	0.43
		Use Thickness Class	20	20	20	20	20	21	22
		Use Thickness	0.38	0.38	0.38	0.38	0.38	0.41	0.44
	5	Calculated Thickness	0.33*	0.34	0.36	0.38	0.40	0.42	0.44
		Use Thickness Class	20	20	20	20	21	21	22
		Use Thickness	0.38	0.38	0.38	0.38	0.41	0.41	0.44
	8	Calculated Thickness	0.37	0.38	0.40	0.41	0.43	0.45	0.47
		Use Thickness Class	20	20	21	21	22	22	23
		Use Thickness	0.38	0.38	0.41	0.41	0.44	0.44	0.48
	12	Calculated Thickness	0.42	0.43	0.44	0.45	0.47	0.48	0.50
		Use Thickness Class	21	22	22	22	23	23	24
		Use Thickness	0.41	0.44	0.44	0.44	0.48	0.48	0.52
	16	Calculated Thickness	0.44	0.45	0.46	0.47	0.48	0.50	0.52
		Use Thickness Class	22	22	23	23	23	24	24
		Use Thickness	0.44	0.44	0.48	0.48	0.48	0.52	0.52

* Asterisk following total calculated thickness indicates that truck superload (Case 2) is the controlling factor. When total calculated thickness is not followed by asterisk, surge pressure (Case 1) is the controlling factor. See Sec. 1-2.1.

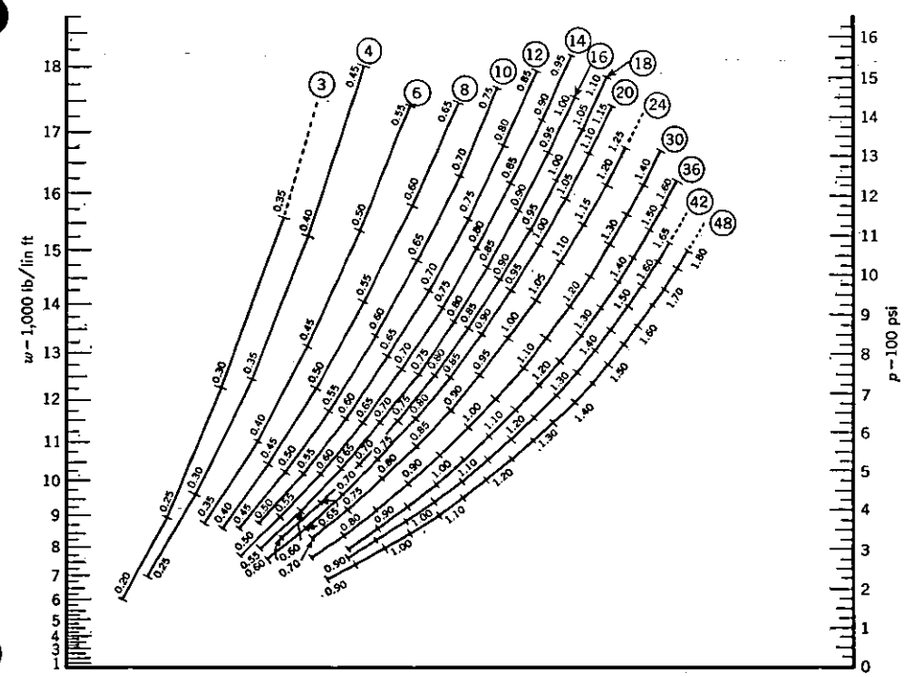

Fig. 1-2. Thickness Nomogram for Pipe of 18/40 Iron Strength, High-Range Load

Thicknesses are net, and computations are made using nominal pipe diameter for inside diameter. S *equals 18,000,* R *equals 40,000. The encircled values at the end of each curve are for pipe size, in inches.*

Explanatory Note to Table 1-7

Irrespective of calculated thickness, standard thicknesses are not made less than certain minimums, which are the smallest thickness classes shown in the above table. They have been chosen by judgment based on experience with the shocks received by pipe in handling and transporting. USA Standards A21.6, A21.7, A21.8, and A21.9 are based on iron strength of 18/40. The recommended minimum nominal thicknesses for such pipe are shown in boldface type. Pipe of 21/45 iron strength for water service may have thicknesses less than those pipe of 18/40 iron strength. Pipe of such reduced thickness should be used only after consideration of possible adverse conditions of installation and environment. The recommended minimum nominal thicknesses for such pipe are shown with an asterisk. Pipe with 21/45 iron strength in Thickness Class 20 are sometimes used in sizes 14–24 in., when the calculated thicknesses permit and where provisions are made for special handling.

TABLE 1-7—*Standard Thickness Classes of Cast-Iron Pipe*

(See note on facing page)

Pipe Size *in.*	Thickness for Standard Thickness Class Number—*in.*										
	20	21	22	23	24	25	26	27	28	29	30
3			0.32*	0.35	0.38	0.41	0.44	0.48	0.52	0.56	0.60
4			0.35*	0.38	0.41	0.44	0.48	0.52	0.56	0.60	0.65
6		0.35*	0.38	0.41	0.44	0.48	0.52	0.56	0.60	0.65	0.70
8	0.35*	0.38	0.41	0.44	0.48	0.52	0.56	0.60	0.65	0.70	0.76
10	0.38*	0.41	0.44	0.48	0.52	0.56	0.60	0.65	0.70	0.76	0.82
12	0.41*	0.44	0.48	0.52	0.56	0.60	0.65	0.70	0.76	0.82	0.89
14	0.43	0.48*	0.51	0.55	0.59	0.64	0.69	0.75	0.81	0.87	0.94
16	0.46	0.50*	0.54	0.58	0.63	0.68	0.73	0.79	0.85	0.92	0.99
18	0.50	0.54*	0.58	0.63	0.63	0.73	0.79	0.85	0.92	0.99	1.07
20	0.53	0.57*	0.62	0.67	0.72	0.78	0.84	0.91	0.98	1.06	1.14
24	0.58	0.63*	0.68	0.73	0.79	0.85	0.92	0.99	1.07	1.16	1.25
30	0.68*	0.73	0.79	0.85	0.92	0.99	1.07	1.16	1.25	1.35	1.46
36	0.75*	0.81	0.87	0.94	1.02	1.10	1.19	1.29	1.39	1.50	1.62
42	0.83*	0.90	0.97	1.05	1.13	1.22	1.32	1.43	1.54	1.66	1.79
48	0.91*	0.98	1.06	1.14	1.23	1.33	1.44	1.56	1.68	1.81	1.95

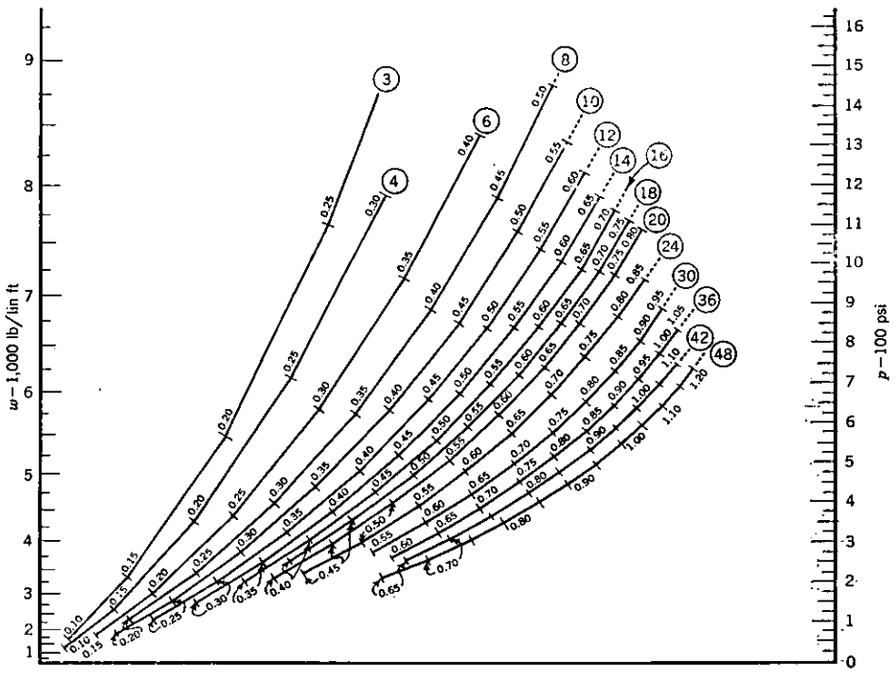

Fig. 1-1. Thickness Nomogram for Pipe of 18/40 Iron Strength, Low-Range Load

Thicknesses are net, and computations are made using nominal pipe diameter for inside diameter. S equals 18,000, R equals 40,000. The encircled values at the end of each curve are for pipe size, in inches.

TABLE 1-2 (*Continued*)

Schedule of Barrel Thickness for Water Pipe of 21/45 Iron Strength

Laying Condition	Depth of Cover *ft*	Thickness Specifications	Internal Pressure—*psi*						
			50	100	150	200	250	300	350
			Barrel Thickness—*in.*						
Twelve-Inch Water Pipe									
A	2½	Calculated Thickness	0.43*	0.44*	0.45*	0.47*	0.48*	0.49*	0.51*
		Use Thickness Class	21	21	21	22	22	22	23
		Use Thickness	0.44	0.44	0.44	0.48	0.48	0.48	0.52
	3½	Calculated Thickness	0.42*	0.43*	0.44*	0.45*	0.47*	0.48*	0.50*
		Use Thickness Class	20	21	21	21	22	22	23
		Use Thickness	0.41	0.44	0.44	0.44	0.48	0.48	0.52
	5	Calculated Thickness	0.43*	0.44*	0.45*	0.46*	0.48	0.50	0.52
		Use Thickness Class	21	21	21	22	22	23	23
		Use Thickness	0.44	0.44	0.44	0.48	0.48	0.52	0.52
	8	Calculated Thickness	0.48	0.49	0.50	0.52	0.54	0.55	0.57
		Use Thickness Class	22	22	23	23	24	24	24
		Use Thickness	0.48	0.48	0.52	0.52	0.56	0.56	0.56
	12	Calculated Thickness	0.53	0.54	0.56	0.57	0.58	0.60	0.62
		Use Thickness Class	23	24	24	24	25	25	25
		Use Thickness	0.52	0.56	0.56	0.56	0.60	0.60	0.60
	16	Calculated Thickness	0.56	0.57	0.58	0.60	0.61	0.63	0.64
		Use Thickness Class	24	24	25	25	25	26	26
		Use Thickness	0.56	0.56	0.60	0.60	0.60	0.65	0.65
B	2½	Calculated Thickness	0.41*	0.42*	0.43*	0.44*	0.46*	0.47*	0.49*
		Use Thickness Class	20	20	21	21	22	22	22
		Use Thickness	0.41	0.41	0.44	0.44	0.48	0.48	0.48
	3½	Calculated Thickness	0.39*	0.40*	0.42*	0.43*	0.45*	0.46*	0.49
		Use Thickness Class	20	20	20	21	21	22	22
		Use Thickness	0.41	0.41	0.41	0.44	0.44	0.48	0.48
	5	Calculated Thickness	0.40*	0.41*	0.42*	0.44*	0.46	0.48	0.51
		Use Thickness Class	20	20	20	21	22	22	23
		Use Thickness	0.41	0.41	0.41	0.44	0.48	0.48	0.52
	8	Calculated Thickness	0.45	0.46	0.48	0.49	0.51	0.53	0.55
		Use Thickness Class	21	22	22	22	23	23	24
		Use Thickness	0.44	0.48	0.48	0.48	0.52	0.52	0.56
	12	Calculated Thickness	0.50	0.51	0.52	0.54	0.56	0.57	0.59
		Use Thickness Class	23	23	23	24	24	24	25
		Use Thickness	0.52	0.52	0.52	0.56	0.56	0.56	0.60
	16	Calculated Thickness	0.52	0.54	0.55	0.56	0.58	0.60	0.61
		Use Thickness Class	23	24	24	24	25	25	25
		Use Thickness	0.52	0.56	0.56	0.56	0.60	0.60	0.60
F	2½	Calculated Thickness	0.37*	0.38*	0.39*	0.41*	0.42*	0.44*	0.48
		Use Thickness Class	20	20	20	20	20	21	22
		Use Thickness	0.41	0.41	0.41	0.41	0.41	0.44	0.48
	3½	Calculated Thickness	0.36*	0.37*	0.38*	0.40*	0.42	0.45	0.48
		Use Thickness Class	20	20	20	20	20	21	22
		Use Thickness	0.41	0.41	0.41	0.41	0.41	0.44	0.48
	5	Calculated Thickness	0.37*	0.38*	0.39*	0.42	0.44	0.47	0.49
		Use Thickness Class	20	20	20	20	21	22	22
		Use Thickness	0.41	0.41	0.41	0.41	0.44	0.48	0.48
	8	Calculated Tjickness	0.41	0.43	0.44	0.46	0.48	0.50	0.53
		Use Thickness Class	20	21	21	22	22	23	23
		Use Thickness	0.41	0.44	0.44	0.48	0.48	0.52	0.52
	12	Calculated Thickness	0.45	0.47	0.48	0.50	0.52	0.54	0.56
		Use Thickness Class	21	22	22	23	23	24	24
		Use Thickness	0.44	0.48	0.48	0.52	0.52	0.56	0.56
	16	Calculated Thickness	0.48	0.49	0.50	0.52	0.54	0.55	0.57
		Use Thickness Class	22	22	23	23	24	24	24
		Use Thickness	0.48	0.48	0.52	0.52	0.56	0.56	0.56

* Asterisk following total calculated thickness indicates that truck superload (Case 2) is the controlling factor. When total calculated thickness is not followed by asterisk, surge pressure (Case 1) is the controlling factor. See Sec. 1-2.1.

TABLE 1-2 (*Continued*)

Schedule of Barrel Thickness for Water Pipe of 21/45 Iron Strength

Laying Condition	Depth of Cover *ft*	Thickness Specifications	Internal Pressure—*psi* 50	100	150	200	250	300	350
			Barrel Thickness—*in.*						
Fourteen-Inch Water Pipe									
A	2½	Calculated Thickness	0.48*	0.50*	0.51*	0.53*	0.54*	0.56*	0.58*
		Use Thickness Class	21	22	22	23	23	23	24
		Use Thickness	0.48	0.51	0.51	0.55	0.55	0.55	0.59
	3½	Calculated Thickness	0.47*	0.49*	0.50*	0.52*	0.53*	0.55*	0.58
		Use Thickness Class	21	21	22	22	23	23	24
		Use Thickness	0.48	0.48	0.51	0.51	0.55	0.55	0.59
	5	Calculated Thickness	0.49*	0.51*	0.52*	0.53*	0.55*	0.58	0.60
		Use Thickness Class	21	22	22	23	23	24	24
		Use Thickness	0.48	0.51	0.51	0.55	0.55	0.59	0.59
	8	Calculated Thickness	0.55	0.56	0.58	0.60	0.62	0.64	0.66
		Use Thickness Class	23	23	24	24	25	25	25
		Use Thickness	0.55	0.55	0.59	0.59	0.64	0.64	0.64
	12	Calculated Thickness	0.60	0.61	0.63	0.65	0.67	0.68	0.71
		Use Thickness Class	24	24	25	25	26	26	26
		Use Thickness	0.59	0.59	0.64	0.64	0.69	0.69	0.69
	16	Calculated Thickness	0.63	0.65	0.66	0.68	0.69	0.71	0.73
		Use Thickness Class	25	25	25	26	26	26	27
		Use Thickness	0.64	0.64	0.64	0.69	0.69	0.69	0.75
B	2½	Calculated Thickness	0.45*	0.47*	0.48*	0.50*	0.51*	0.53*	0.56*
		Use Thickness Class	21	21	21	22	22	23	23
		Use Thickness	0.48	0.48	0.48	0.51	0.51	0.55	0.55
	3½	Calculated Thickness	0.44*	0.46*	0.47*	0.49*	0.51*	0.53	0.57
		Use Thickness Class	21	21	21	21	22	23	24
		Use Thickness	0.48	0.48	0.48	0.48	0.51	0.55	0.59
	5	Calculated Thickness	0.46*	0.47*	0.49*	0.50	0.53	0.56	0.59
		Use Thickness Class	21	21	21	22	23	23	24
		Use Thickness	0.48	0.48	0.48	0.51	0.55	0.55	0.59
	8	Calculated Thickness	0.52	0.53	0.55	0.57	0.59	0.61	0.64
		Use Thickness Class	22	23	23	24	24	24	25
		Use Thickness	0.51	0.55	0.55	0.59	0.59	0.59	0.64
	12	Calculated Thickness	0.56	0.57	0.59	0.61	0.63	0.65	0.67
		Use Thickness Class	23	24	24	24	25	25	26
		Use Thickness	0.55	0.59	0.59	0.59	0.64	0.64	0.69
	16	Calculated Thickness	0.59	0.60	0.62	0.64	0.65	0.67	0.70
		Use Thickness Class	24	24	25	25	25	26	26
		Use Thickness	0.59	0.59	0.64	0.64	0.64	0.69	0.69
F	2½	Calculated Thickness	0.42*	0.43*	0.44*	0.46*	0.48*	0.51	0.55
		Use Thickness Class	21	21	21	21	21	22	23
		Use Thickness	0.48	0.48	0.48	0.48	0.48	0.51	0.55
	3½	Calculated Thickness	0.41*	0.42*	0.44*	0.45*	0.48	0.52	0.56
		Use Thickness Class	21	21	21	21	21	22	23
		Use Thickness	0.48	0.48	0.48	0.48	0.48	0.51	0.55
	5	Calculated Thickness	0.42*	0.43*	0.45	0.48	0.51	0.54	0.57
		Use Thickness Class	21	21	21	21	22	23	24
		Use Thickness	0.48	0.48	0.48	0.48	0.51	0.55	0.59
	8	Calculated Thickness	0.47	0.49	0.51	0.53	0.55	0.58	0.61
		Use Thickness Class	21	21	22	23	23	24	24
		Use Thickness	0.48	0.48	0.51	0.55	0.55	0.59	0.59
	12	Calculated Thickness	0.51	0.53	0.54	0.56	0.59	0.61	0.63
		Use Thickness Class	22	23	23	23	24	24	25
		Use Thickness	0.51	0.55	0.55	0.55	0.59	0.59	0.64
	16	Calculated Thickness	0.54	0.55	0.57	0.59	0.61	0.63	0.65
		Use Thickness Class	23	23	24	24	24	25	25
		Use Thickness	0.55	0.55	0.59	0.59	0.59	0.64	0.64

* Asterisk following total calculated thickness indicates that truck superload (Case 2) is the controlling factor. When total calculated thickness is not followed by asterisk, surge pressure (Case 1) is the controlling factor. See Sec. 1-2.1.

TABLE 1-5

Internal Pressures (p)*

Pipe Size *in.*	Rated Working Pressure—*psi* 10	50	100	150	200	250	300	350
Case 1—Internal Pressure With Surge Pressure Allowances†								
3	—	425	550	675	800	925	1,050	1,175
4	—	425	550	675	800	925	1,050	1,175
6	—	425	550	675	800	925	1,050	1,175
8	—	425	550	675	800	925	1,050	1,175
10	—	425	550	675	800	925	1,050	1,175
12	—	400	525	650	775	900	1,025	1,150
14	—	400	525	650	775	900	1,025	1,150
16	—	375	500	625	750	875	1,000	1,125
18	—	375	500	625	750	875	1,000	1,125
20	—	350	475	600	725	850	975	1,100
24	—	338	463	588	713	838	963	1,088
30	—	325	450	575	700	825	950	1,075
36	—	313	438	563	688	813	938	1,063
42	—	300	425	550	675	800	925	1,050
48	—	300	425	550	675	800	925	1,050
54	—	300	425	550	675	800	925	1,050
60	—	300	425	550	675	800	925	1,050
Case 2—Internal Pressure Without Surge Pressure Allowances								
3–60 all	25	125	250	375	500	625	750	875

* Safety factor of 2.5 included.
† For surge pressure allowances, see Table 1-10.

TABLE 1-6

Allowances For Casting Tolerance

Pipe Size *in.*	Casting Tolerance *in.*	Pipe Size *in.*	Casting Tolerance *in.*
3–8	0.05	14–24	0.08
10–12	0.06	30–48	0.10

TABLE 1-4 (*Continued*)

Ring Test Load Equivalents (w) *of Trench Loads*—lb/lin ft*

Laying Condition	Pipe Size *in.*	Depth of Cover—*ft* 2½	3½	5	8	12	16	20	24
Case 2—Ring Test Load Equivalent of Earth Load Plus Truck Superload (Use Without Surge Pressure)†									
A	3	748	741	935	1,411	2,059	2,704	3,363	4,041
	4	1,137	1,057	1,200	1,780	2,602	3,426	4,261	5,104
	6	1,904	1,678	1,839	2,541	3,696	4,843	5,543	5,798
	8	2,528	2,267	2,437	3,270	4,696	5,752	6,198	6,506
	10	3,087	2,798	2,978	3,987	5,611	6,346	6,867	7,239
	12	3,635	3,317	3,517	4,767	6,104	6,950	7,548	7,991
	14	3,880	3,641	4,039	5,409	6,598	7,561	8,250	8,763
	16	4,183	3,996	4,478	5,880	7,128	8,220	8,980	9,567
	18	4,489	4,361	4,887	6,298	7,661	8,841	9,702	10,374
	20	4,865	4,772	5,400	6,730	8,198	9,502	10,456	11,213
	24	5,383	5,250	6,043	7,513	9,250	10,761	11,930	12,876
	30	6,278	6,115	7,083	8,746	10,865	12,726	14,226	15,476
	36	7,180	7,054	8,083	9,911	12,465	14,724	16,587	18,167
	42	7,878	7,887	9,035	11,115	14,076	16,778	19,000	20,939
	48	8,596	8,728	10,035	12,350	15,761	18,824	21,432	23,743
	54	9,165	9,483	10,967	13,563	17,452	20,861	23,902	26,572
	60	9,789	10,237	11,904	14,783	19,193	22,909	26,393	29,437
B	3	672	666	840	1,268	1,850	2,430	3,021	3,631
	4	1,014	942	1,070	1,587	2,320	3,054	3,798	4,550
	6	1,659	1,462	1,602	2,214	3,220	4,220	4,830	5,051
	8	2,170	1,946	2,091	2,806	4,030	4,937	5,319	5,584
	10	2,610	2,366	2,518	3,371	4,744	5,366	5,807	6,121
	12	3,029	2,765	2,931	3,973	5,087	5,792	6,290	6,659
	14	3,165	2,970	3,294	4,411	5,381	6,166	6,729	7,147
	16	3,364	3,213	3,601	4,729	5,733	6,610	7,222	7,694
	18	3,560	3,459	3,876	4,995	6,076	7,012	7,695	8,228
	20	3,806	3,733	4,225	5.265	6.413	7,434	8,180	8,772
	24	4,072	3,972	4,572	5,684	6,998	8,141	9,026	9,742
	30	4,570	4,451	5,155	6,366	7,908	9,263	10,354	11,264
	36	5,035	4,947	5,668	6,950	8,741	10,325	11,631	12,739
	42	5,361	5,367	6,148	7,564	9,578	11,417	12,929	14,248
	48	5,747	5,836	6,709	8,257	10,538	12,586	14,330	15,875
	54	6,023	6,232	7,207	8,913	11,469	13,709	15,707	17,461
	60	6,360	6,651	7,734	9,604	12,470	14,884	17,148	19,126
F	3	494	490	618	932	1,361	1,787	2,223	2,671
	4	747	694	789	1,170	1,710	2,251	2,800	3,354
	6	1,230	1,084	1,188	1,642	2,388	3,129	3,581	3,746
	8	1,615	1,449	1,557	2,089	3,000	3,675	3,960	4,157
	10	1,940	1,758	1,872	2,505	3,526	3,988	4,316	4,549
	12	2,260	2,062	2,187	2,964	3,795	4,320	4,692	4,968
	14	2,374	2,227	2,471	3,309	4,036	4,625	5,046	5,360
	16	2,532	2,418	2,711	3,559	4,315	4,975	5,436	5,791
	18	2,675	2,598	2,912	3,752	4,565	5,268	5,781	6,181
	20	2,869	2,814	3,185	3,969	4,835	5,604	6,167	6,613
	24	3,095	3,019	3,475	4,320	5,319	6,188	6,860	7,404
	30	3,471	3,381	3,916	4,835	6,007	7,036	7,865	8,556
	36	3,859	3,791	4.343	5.326	6,698	7,912	8,914	9,763
	42	4,118	4,123	4,723	5,810	7,358	8,771	9,932	10,945
	48	4,393	4,461	5,129	6,312	8,055	9,621	10,954	12,136
	54	4,603	4,762	5,508	6,811	8,764	10,476	12,003	13,344
	60	4,874	5,097	5,927	7,360	9,556	11,405	13,140	14,655

*A safety factor of 2.5 is included. These ring test load equivalents are based on the earth loads and truck superloads in Table 1-8.

† Truck superload is based on two passing trucks with adjacent wheels 3 ft apart, having a 9,000-lb wheel load on unpaved road or flexible pavement and an impact factor of 1.50 (see Sec. 1-3.3).

TABLE 1-2 (*Continued*)

Schedule of Barrel Thickness for Water Pipe of 21/45 Iron Strength

Laying Condition	Depth of Cover *ft*	Thickness Specifications	Internal Pressure—*psi* 50	100	150	200	250	300	350
			Barrel Thickness—*in.*						
Sixteen-Inch Water Pipe									
A	2½	Calculated Thickness	0.52*	0.53*	0.55*	0.57*	0.59*	0.61*	0.63*
		Use Thickness Class	22	22	22	23	23	24	24
		Use Thickness	0.54	0.54	0.54	0.58	0.58	0.63	0.63
	3½	Calculated Thickness	0.51*	0.53*	0.54*	0.56*	0.58*	0.60*	0.63*
		Use Thickness Class	21	22	22	23	23	23	24
		Use Thickness	0.50	0.54	0.54	0.58	0.58	0.58	0.63
	5	Calculated Thickness	0.53*	0.55*	0.56*	0.58*	0.60*	0.63	0.66
		Use Thickness Class	22	22	23	23	23	24	25
		Use Thickness	0.54	0.54	0.58	0.58	0.58	0.63	0.68
	8	Calculated Thickness	0.59	0.61	0.62	0.64	0.67	0.69	0.72
		Use Thickness Class	23	24	24	24	25	25	26
		Use Thickness	0.58	0.63	0.63	0.63	0.68	0.68	0.73
	12	Calculated Thickness	0.64	0.66	0.68	0.70	0.72	0.74	0.77
		Use Thickness Class	24	25	25	25	26	26	27
		Use Thickness	0.63	0.68	0.68	0.68	0.73	0.73	0.79
	16	Calculated Thickness	0.68	0.70	0.71	0.73	0.75	0.77	0.80
		Use Thickness Class	25	25	26	26	26	27	27
		Use Thickness	0.68	0.68	0.73	0.73	0.73	0.79	0.79
B	2½	Calculated Thickness	0.48*	0.50*	0.51*	0.53*	0.55*	0.58*	0.60*
		Use Thickness Class	21	21	21	22	22	23	23
		Use Thickness	0.50	0.50	0.50	0.54	0.54	0.58	0.58
	3½	Calculated Thickness	0.48*	0.49*	0.51*	0.53*	0.55*	0.57	0.61
		Use Thickness Class	21	21	21	22	22	23	24
		Use Thickness	0.50	0.50	0.50	0.54	0.54	0.58	0.63
	5	Calculated Thickness	0.49*	0.51*	0.53*	0.54	0.57	0.60	0.64
		Use Thickness Class	21	21	22	22	23	23	24
		Use Thickness	0.50	0.50	0.54	0.54	0.58	0.58	0.63
	8	Calculated Thickness	0.55	0.57	0.59	0.61	0.63	0.66	0.69
		Use Thickness Class	22	23	23	24	24	25	25
		Use Thickness	0.54	0.58	0.58	0.63	0.63	0.68	0.68
	12	Calculated Thickness	0.60	0.62	0.63	0.65	0.68	0.70	0.73
		Use Thickness Class	23	24	24	24	25	25	26
		Use Thickness	0.58	0.63	0.63	0.63	0.68	0.68	0.73
	16	Calculated Thickness	0.63	0.65	0.67	0.69	0.71	0.73	0.76
		Use Thickness Class	24	24	25	25	26	26	27
		Use Thickness	0.63	0.63	0.68	0.68	0.73	0.73	0.79
F	2½	Calculated Thickness	0.44*	0.46*	0.47*	0.49*	0.52*	0.55	0.60
		Use Thickness Class	21	21	21	21	22	22	23
		Use Thickness	0.50	0.50	0.50	0.50	0.54	0.54	0.58
	3½	Calculated Thickness	0.44*	0.45*	0.47*	0.49*	0.52	0.56	0.60
		Use Thickness Class	21	21	21	21	22	23	23
		Use Thickness	0.50	0.50	0.50	0.50	0.54	0.58	0.58
	5	Calculated Thickness	0.45*	0.47*	0.49	0.52	0.55	0.58	0.62
		Use Thickness Class	21	21	21	22	22	23	24
		Use Thickness	0.50	0.50	0.50	0.54	0.54	0.58	0.63
	8	Calculated Thickness	0.50	0.52	0.54	0.57	0.59	0.62	0.66
		Use Thickness Class	21	22	22	23	23	24	25
		Use Thickness	0.51	0.54	0.54	0.58	0.58	0.63	0.68
	12	Calculated Thickness	0.55	0.56	0.58	0.61	0.63	0.66	0.69
		Use Thickness Class	22	23	23	24	24	25	25
		Use Thickness	0.54	0.58	0.58	0.63	0.63	0.68	0.68
	16	Calculated Thickness	0.58	0.59	0.61	0.63	0.66	0.68	0.71
		Use Thickness Class	23	23	24	24	25	25	26
		Use Thickness	0.58	0.58	0.63	0.63	0.68	0.68	0.73

* Asterisk following total calculated thickness indicates that truck superload (Case 2) is the controlling factor. When total calculated thickness is not followed by asterisk, surge pressure (Case 1) is the controlling factor. See Sec. 1-2.1.

TABLE 1-2 (*Continued*)

Schedule of Barrel Thickness for Water Pipe of 21/45 Iron Strength

Laying Condition	Depth of Cover *ft*	Thickness Specifications	Internal Pressure—*psi* 50	100	150	200	250	300	350
			Barrel Thickness—*in.*						
Eighteen-Inch Water Pipe									
A	2½	Calculated Thickness	0.56*	0.57*	0.59*	0.61*	0.63*	0.66*	0.68*
		Use Thickness Class	22	22	22	23	23	24	24
		Use Thickness	0.58	0.58	0.58	0.63	0.63	0.68	0.68
	3½	Calculated Thickness	0.55*	0.57*	0.58*	0.60*	0.63*	0.65*	0.68
		Use Thickness Class	21	22	22	22	23	23	24
		Use Thickness	0.54	0.58	0.58	0.58	0.63	0.63	0.68
	5	Calculated Thickness	0.57*	0.59*	0.61*	0.63*	0.65	0.68	0.72
		Use Thickness Class	22	22	23	23	23	24	25
		Use Thickness	0.58	0.58	0.63	0.63	0.63	0.68	0.73
	8	Calculated Thickness	0.63*	0.65	0.67	0.69	0.72	0.75	0.78
		Use Thickness Class	23	23	24	24	25	25	26
		Use Thickness	0.63	0.63	0.68	0.68	0.73	0.73	0.79
	12	Calculated Thickness	0.69	0.71	0.73	0.75	0.78	0.80	0.83
		Use Thickness Class	24	25	25	25	26	26	27
		Use Thickness	0.68	0.73	0.73	0.73	0.79	0.79	0.85
	16	Calculated Thickness	0.73	0.75	0.77	0.79	0.82	0.84	0.87
		Use Thickness Class	25	25	26	26	27	27	27
		Use Thickness	0.73	0.73	0.79	0.79	0.85	0.85	0.85
B	2½	Calculated Thickness	0.51*	0.53*	0.55*	0.57*	0.59*	0.62*	0.65
		Use Thickness Class	21	21	21	22	22	23	23
		Use Thickness	0.54	0.54	0.54	0.58	0.58	0.63	0.63
	3½	Calculated Thickness	0.51*	0.53*	0.54*	0.56*	0.59*	0.62	0.67
		Use Thickness Class	21	21	21	22	22	23	24
		Use Thickness	0.54	0.54	0.54	0.58	0.58	0.63	0.68
	5	Calculated Thickness	0.53*	0.54*	0.56*	0.59	0.62	0.66	0.70
		Use Thickness Class	21	21	22	22	23	24	24
		Use Thickness	0.54	0.54	0.58	0.58	0.63	0.68	0.68
	8	Calculated Thickness	0.58	0.60	0.62	0.65	0.68	0.71	0.74
		Use Thickness Class	22	22	23	23	24	25	25
		Use Thickness	0.58	0.58	0.63	0.63	0.68	0.73	0.73
	12	Calculated Thickness	0.64	0.66	0.68	0.70	0.73	0.76	0.79
		Use Thickness Class	23	24	24	24	25	26	26
		Use Thickness	0.63	0.68	0.68	0.68	0.73	0.79	0.79
	16	Calculated Thickness	0.68	0.70	0.72	0.74	0.76	0.79	0.82
		Use Thickness Class	24	24	25	25	26	26	27
		Use Thickness	0.68	0.68	0.73	0.73	0.79	0.79	0.85
F	2½	Calculated Thickness	0.47*	0.49*	0.50*	0.53*	0.55*	0.60	0.65
		Use Thickness Class	21	21	21	21	21	22	23
		Use Thickness	0.54	0.54	0.54	0.54	0.54	0.58	0.63
	3½	Calculated Thickness	0.46*	0.48*	0.50*	0.52*	0.56	0.61	0.66
		Use Thickness Class	21	21	21	21	22	23	24
		Use Thickness	0.54	0.54	0.54	0.54	0.58	0.63	0.68
	5	Calculated Thickness	0.48*	0.50*	0.52	0.56	0.59	0.63	0.68
		Use Thickness Class	21	21	21	22	22	23	24
		Use Thickness	0.54	0.54	0.54	0.58	0.58	0.63	0.68
	8	Calculated Thickness	0.54	0.56	0.58	0.61	0.64	0.67	0.71
		Use Thickness Class	21	22	22	23	23	24	25
		Use Thickness	0.54	0.58	0.58	0.63	0.63	0.68	0.73
	12	Calculated Thickness	0.58	0.60	0.63	0.65	0.68	0.71	0.74
		Use Thickness Class	22	22	23	23	24	25	25
		Use Thickness	0.58	0.58	0.63	0.63	0.68	0.73	0.73
	16	Calculated Thickness	0.61	0.63	0.66	0.68	0.71	0.74	0.77
		Use Thickness Class	23	23	24	24	25	25	26
		Use Thickness	0.63	0.63	0.68	0.68	0.73	0.73	0.79

* Asterisk following total calculated thickness indicates that truck superload (Case 2) is the controlling factor. When total calculated thickness is not followed by asterisk, surge pressure (Case 1) is the controlling factor. See Sec. 1-2.1.

TABLE 1-4

Ring Test Load Equivalents (w) *of Trench Loads*—lb/lin ft*

Laying Condition	Pipe Size *in.*	Depth of Cover—*ft* 2½	3½	5	8	12	16	20	24
Case 1—Ring Test Load Equivalent of Earth Load (Use With Surge Pressure)									
A	3	396	565	817	1,324	2,000	2,674	3,343	4,026
	4	491	704	1,024	1,663	2,515	3,367	4,222	5,074
	6	672	974	1,428	2,337	3,548	4,756	5,487	5,754
	8	826	1,211	1,791	2,948	4,491	5,635	6,120	6,446
	10	974	1,448	2,157	3,576	5,376	6,198	6,770	7,163
	12	1,111	1,674	2,520	4,239	5,839	6,774	7,433	7,902
	14	1,235	1,887	2,865	4,822	6,304	7,356	8,115	8,659
	16	1,341	2,085	3,196	5,176	6,776	7,954	8,804	9,433
	18	1,446	2,265	3,513	5,506	7,250	8,548	9,509	10,224
	20	1,552	2,433	3,815	5,839	7,728	9,150	10,224	11,033
	24	1,770	2,730	4,372	6,509	8,693	10,378	11,678	12,680
	30	2,093	3,167	5,087	7,520	10,161	12,256	13,915	15,237
	36	2,437	3,626	5,713	8,537	11,643	14,167	16,220	17,882
	42	2,761	4,083	6,341	9,556	13,078	16,104	18,554	20,560
	48	3,102	4,550	6,991	10,580	14,646	18,061	20,928	23,354
	54	3,437	5,022	7,650	11,609	16,161	20,039	23,346	26,161
	60	3,778	5,493	8,313	12,643	17,815	22,028	25,776	28,998
B	3	355	508	734	1,189	1,797	2,402	3,004	3,617
	4	438	628	913	1,483	2,242	3,002	3,764	4,523
	6	585	848	1,244	2,036	3,091	4,144	4,780	5,014
	8	709	1,039	1,537	2,530	3,855	4,836	5,252	5,531
	10	824	1,224	1,823	3,024	4,546	5,241	5,724	6,057
	12	926	1,395	2,100	3,533	4,866	5,645	6,194	6,586
	14	1,007	1,539	2,337	3,933	5,142	6,000	6,618	7,062
	16	1,079	1,677	2,570	4,163	5,449	6,397	7,080	7,586
	18	1,147	1,797	2,786	4,367	5,750	6,779	7,541	8,109
	20	1,214	1,903	2,985	4,568	6,046	7,158	7,998	8,631
	24	1,339	2,066	3,307	4,924	6,577	7,852	8,836	9,593
	30	1,524	2,305	3,703	5,473	7,396	8,921	10,128	11,090
	36	1,709	2,543	4,006	5,986	8,165	9,935	11,373	12,540
	42	1,879	2,778	4,315	6,503	8,899	10,959	12,626	14,015
	48	2,074	3,042	4,674	7,074	9,792	12,076	13,993	15,615
	54	2,259	3,300	5,027	7,629	10,620	13,169	15,342	17,191
	60	2,455	3,569	5,401	8,215	11,575	14,312	16,747	18,841
F	3	261	374	540	875	1,322	1,767	2,210	2,661
	4	323	463	673	1,093	1,653	2,213	2,774	3,334
	6	434	629	923	1,510	2,292	3,073	3,545	3,718
	8	528	774	1,144	1,883	2,869	3,600	3,910	4,118
	10	612	910	1,355	2,247	3,378	3,895	4,254	4,502
	12	691	1,041	1,566	2,635	3,630	4,211	4,620	4,912
	14	755	1,154	1,753	2,949	3,856	4,500	4,964	5,297
	16	812	1,262	1,934	3,133	4,101	4,815	5,329	5,709
	18	861	1,350	2,093	3,281	4,320	5,093	5,666	6,092
	20	915	1,435	2,250	3,444	4,558	5,396	6,029	6,506
	24	1,018	1,570	2,514	3,742	4,999	5,968	6,715	7,291
	30	1,157	1,751	2,812	4,157	5,618	6,776	7,693	8,424
	36	1,310	1,949	3,070	4,588	6,257	7,613	8,716	9,610
	42	1,443	2,134	3,315	4,996	6,837	8,418	9,699	10,766
	48	1,586	2,326	3,573	5,408	7,485	9,231	10,697	11,937
	54	1,726	2,522	3,842	5,830	8,116	10,063	11,724	13,138
	60	1,881	2,735	4,139	6,295	8,869	10,967	12,832	14,436

* A safety factor of 2.5 is included. These ring test load equivalents are based on the earth loads in Table 1-8.

lect the nomogram for the desired iron strength and range of loads and pressures. Locate the values of w and p for Case 1 on the vertical scales. Connect these values with a straightedge and read the required thickness for Case 1.

d. Repeat this procedure using the above values of w and p for Case 2 and read the required thickness for Case 2.

e. The larger thickness, as determined for Cases 1 and 2, is the net thickness for water pipe. (For gas pipe, only Case 2 is applicable.)

1–2.2.2—*Addition of Allowances to Net Thickness*

a. A corrosion allowance of 0.08 in. is added to the net thickness. The resulting thickness is the minimum manufacturing thickness. Where severe corrosion is anticipated, an analysis of the condition should be made.

b. A casting tolerance from Table 1–6 is added to the minimum manufacturing thickness and the resulting thickness is the total calculated thickness.

1–2.2.3—*Selection of Standard Thickness*

Refer to Table 1–7 and select the standard class thickness nearest to the total calculated thickness. When the calculated thickness is halfway between two standard thicknesses, the larger of these is selected. When the calculated thickness is less than the smallest standard thickness, the smallest standard thickness is selected.

Sec. 1–2.3—Example for Determining Thickness of 18-in. Water Pipe

Determine the thickness for 18-in. cast-iron pipe laid on flat-bottom trench with tamped backfill (Laying Condition B), under 5 ft of cover for a working pressure of 200 psi. Iron strength is 18/40.

1–2.3.1—*Step 1—Determination of Net Thickness*

a. From Table 1–4, the ring test load equivalents of trench load, including a safety factor of 2.5, are:

For Case 1, $w = 2{,}786$ lb/lin ft
For Case 2, $w = 3{,}876$ lb/lin ft

b. From Table 1–5, the internal pressures, including a safety factor of 2.5, are:

For Case 1, $p = 750$ psi
For Case 2, $p = 500$ psi

c. Using Fig. 1–1, locate $w = 2{,}786$ and $p = 750$ on the vertical scales. Connect these values with a straightedge and read the thickness for Case 1, which is 0.47 in.

d. Using Fig. 1–1, locate $w = 3{,}876$ and $p = 500$ and read the thickness for Case 2, which is 0.46 in.

e. The larger of these two thicknesses is the net thickness. The controlling one in this example is 0.47 in. (Case 1).

1–2.3.2—*Step 2—Addition of Allowances to Net Thickness*

The total calculated thickness, as shown in Table 1–1, is determined as follows:

Net thickness	0.47 in.
Corrosion allowance	0.08 in
Minimum manufacturing thickness	0.55 in.
Casting tolerance (Table 1-6)	0.08 in.
Total calculated thickness	0.63 in.

1–2.3.3—*Step 3—Selection of Standard Thickness*

From Table 1–7, the total calculated thickness of 0.63 in. is exactly the same as Class 23. Therefore, Class 23 is the standard thickness class for the pipe in this example.

In ordering or specifying, the above pipe is identified as 18-in. size, thickness Class 23, conforming to USA Standard A21.6 or A21.8 as applicable.

TABLE 1–2 (*Continued*)

Schedule of Barrel Thickness for Water Pipe of 21/45 Iron Strength

Laying Condition	Depth of Cover *ft*	Thickness Specifications	Internal Pressure—*psi* 50	100	150	200	250	300	350
			Barrel Thickness—*in.*						
		Twenty-Inch Water Pipe							
A	2½	Calculated Thickness	0.59*	0.61*	0.63*	0.65*	0.68*	0.71*	0.74*
		Use Thickness Class	21	22	22	23	23	24	24
		Use Thickness	0.57	0.62	0.62	0.67	0.67	0.72	0.72
	3½	Calculated Thickness	0.59*	0.61*	0.63*	0.65*	0.68*	0.70*	0.73*
		Use Thickness Class	21	22	22	23	23	24	24
		Use Thickness	0.57	0.62	0.62	0.67	0.67	0.72	0.72
	5	Calculated Thickness	0.62*	0.64*	0.65*	0.67*	0.70*	0.73	0.77
		Use Thickness Class	22	22	23	23	24	24	25
		Use Thickness	0.62	0.62	0.67	0.67	0.72	0.72	0.78
	8	Calculated Thickness	0.67*	0.69	0.71	0.74	0.77	0.80	0.83
		Use Thickness Class	23	23	24	24	25	25	26
		Use Thickness	0.67	0.67	0.72	0.72	0.78	0.78	0.84
	12	Calculated Thickness	0.74	0.76	0.78	0.80	0.83	0.86	0.89
		Use Thickness Class	24	25	25	25	26	26	27
		Use Thickness	0.72	0.78	0.78	0.78	0.84	0.84	0.91
	16	Calculated Thickness	0.78	0.80	0.83	0.85	0.87	0.90	0.93
		Use Thickness Class	25	25	26	26	26	27	27
		Use Thickness	0.78	0.78	0.84	0.84	0.84	0.91	0.91
B	2½	Calculated Thickness	0.55*	0.56*	0.58*	0.61*	0.63*	0.66*	0.70*
		Use Thickness Class	21	21	21	22	22	23	24
		Use Thickness	0.57	0.57	0.57	0.62	0.67	0.67	0.72
	3½	Calculated Thickness	0.54*	0.56*	0.58*	0.60*	0.63*	0.66*	0.71*
		Use Thickness Class	21	21	21	22	22	23	24
		Use Thickness	0.57	0.57	0.57	0.62	0.62	0.67	0.72
	5	Calculated Thickness	0.57*	0.58*	0.60*	0.63*	0.66	0.70	0.74
		Use Thickness Class	21	21	22	22	23	24	24
		Use Thickness	0.57	0.57	0.62	0.62	0.67	0.72	0.72
	8	Calculated Thickness	0.62	0.64	0.66	0.69	0.72	0.76	0.79
		Use Thickness Class	22	22	23	23	24	24	25
		Use Thickness	0.62	0.62	0.67	0.67	0.72	0.78	0.78
	12	Calculated Thickness	0.68	0.70	0.72	0.75	0.77	0.81	0.84
		Use Thickness Class	23	24	24	25	25	26	26
		Use Thickness	0.67	0.72	0.72	0.78	0.78	0.84	0.84
	16	Calculated Thickness	0.72	0.74	0.76	0.78	0.81	0.84	0.87
		Use Thickness Class	24	24	25	25	25	26	26
		Use Thickness	0.72	0.72	0.78	0.78	0.84	0.84	0.84
F	2½	Calculated Thickness	0.50*	0.52*	0.54*	0.56*	0.59*	0.64	0.69
		Use Thickness Class	21	21	21	21	21	22	23
		Use Thickness	0.57	0.57	0.57	0.57	0.57	0.62	0.67
	3½	Calculated Thickness	0.49*	0.51*	0.53*	0.56*	0.60	0.65	0.70
		Use Thickness Class	21	21	21	21	22	23	24
		Use Thickness	0.57	0.57	0.57	0.57	0.62	0.67	0.72
	5	Calculated Thickness	0.51*	0.53	0.55	0.59	0.63	0.67	0.72
		Use Thickness Class	21	21	21	21	22	23	24
		Use Thickness	0.57	0.57	0.57	0.57	0.62	0.67	0.72
	8	Calculated Thickness	0.56	0.59	0.61	0.64	0.68	0.72	0.76
		Use Thickness Class	21	21	22	22	23	24	25
		Use Thickness	0.57	0.57	0.62	0.62	0.67	0.72	0.78
	12	Calculated Thickness	0.61	0.64	0.66	0.69	0.72	0.75	0.79
		Use Thickness Class	22	22	23	23	24	25	25
		Use Thickness	0.62	0.62	0.67	0.67	0.72	0.78	0.78
	16	Calculated Thickness	0.65	0.67	0.70	0.72	0.75	0.78	0.82
		Use Thickness Class	23	23	24	24	25	25	26
		Use Thickness	0.67	0.67	0.72	0.72	0.78	0.78	0.84

* Asterisk following total calculated thickness indicates that truck superload (Case 2)is the controlling factor. When total calculated thickness is not followed by asterisk, surge pressure (Case 1) is the controlling factor. See Sec. 1–2.1.

TABLE 1–2 (*Continued*)

Schedule of Barrel Thickness for Water Pipe of 21/45 Iron Strength

Laying Condition	Depth of Cover *ft*	Thickness Specifications	Internal Pressure—*psi* 50	100	150	200	250	300	350
			Barrel Thickness—*in.*						
		Twenty-four-Inch Water Pipe							
A	2½	Calculated Thickness	0.66*	0.68*	0.71*	0.73*	0.76*	0.80*	0.84*
		Use Thickness Class	22	22	23	23	24	24	25
		Use Thickness	0.68	0.68	0.73	0.73	0.79	0.79	0.85
	3½	Calculated Thickness	0.66*	0.68*	0.70*	0.73*	0.76*	0.79*	0.83*
		Use Thickness Class	22	22	22	23	24	24	25
		Use Thickness	0.68	0.68	0.68	0.73	0.79	0.79	0.85
	5	Calculated Thickness	0.69*	0.71*	0.74*	0.76*	0.79*	0.83	0.88
		Use Thickness Class	22	23	23	24	24	25	25
		Use Thickness	0.68	0.73	0.73	0.79	0.79	0.85	0.85
	8	Calculated Thickness	0.75*	0.77	0.80	0.83	0.87	0.91	0.95
		Use Thickness Class	23	24	24	25	25	26	26
		Use Thickness	0.73	0.79	0.79	0.85	0.85	0.92	0.92
	12	Calculated Thickness	0.83	0.85	0.88	0.91	0.94	0.98	1.01
		Use Thickness Class	25	25	25	26	26	27	27
		Use Thickness	0.85	0.85	0.85	0.92	0.92	0.99	0.99
	16	Calculated Thickness	0.89	0.91	0.94	0.96	0.99	1.03	1.06
		Use Thickness Class	26	26	26	27	27	28	28
		Use Thickness	0.92	0.92	0.92	0.99	0.99	1.07	1.07
B	2½	Calculated Thickness	0.60*	0.62*	0.65*	0.67*	0.71*	0.74*	0.80
		Use Thickness Class	21	21	21	22	23	23	24
		Use Thickness	0.63	0.63	0.68	0.68	0.73	0.73	0.79
	3½	Calculated Thickness	0.59*	0.62*	0.64*	0.67*	0.70*	0.75	0.81
		Use Thickness Class	21	21	21	22	22	23	24
		Use Thickness	0.63	0.63	0.63	0.68	0.68	0.73	0.79
	5	Calculated Thickness	0.62*	0.65*	0.67*	0.70	0.74	0.79	0.85
		Use Thickness Class	21	21	22	22	23	24	25
		Use Thickness	0.63	0.63	0.68	0.68	0.73	0.79	0.85
	8	Calculated Thickness	0.68	0.71	0.74	0.77	0.81	0.85	0.90
		Use Thickness Class	22	23	23	24	24	25	26
		Use Thickness	0.68	0.73	0.73	0.79	0.79	0.85	0.92
	12	Calculated Thickness	0.75	0.78	0.80	0.83	0.87	0.91	0.95
		Use Thickness Class	23	24	24	25	25	26	26
		Use Thickness	0.73	0.79	0.79	0.85	0.85	0.92	0.92
	16	Calculated Thickness	0.80	0.82	0.85	0.88	0.91	0.95	0.99
		Use Thickness Class	24	25	25	25	26	26	27
		Use Thickness	0.79	0.85	0.85	0.85	0.92	0.92	0.99
F	2½	Calculated Thickness	0.54*	0.57*	0.59*	0.62*	0.66*	0.72	0.79
		Use Thickness Class	21	21	21	21	22	23	24
		Use Thickness	0.63	0.62	0.63	0.63	0.68	0.73	0.79
	3½	Calculated Thickness	0.54*	0.56*	0.59*	0.62*	0.67	0.73	0.80
		Use Thickness Class	21	21	21	21	22	23	24
		Use Thickness	0.63	0.63	0.63	0.63	0.68	0.72	0.79
	5	Calculated Thickness	0.57*	0.59*	0.62	0.66	0.71	0.76	0.82
		Use Thickness Class	21	21	21	22	23	24	25
		Use Thickness	0.63	0.63	0.63	0.68	0.73	0.79	0.85
	8	Calculated Thickness	0.62	0.65	0.68	0.72	0.76	0.81	0.86
		Use Thickness Class	21	21	22	23	24	24	25
		Use Thickness	0.63	0.63	0.68	0.73	0.79	0.79	0.85
	12	Calculated Thickness	0.68	0.71	0.74	0.77	0.81	0.85	0.90
		Use Thickness Class	22	23	23	24	24	25	26
		Use Thickness	0.68	0.73	0.73	0.79	0.79	0.85	0.92
	16	Calculated Thickness	0.72	0.75	0.78	0.81	0.85	0.89	0.93
		Use Thickness Class	23	23	24	24	25	25	26
		Use Thickness	0.73	0.73	0.79	0.79	0.85	0.92	0.92

* Asterisk following total calculated thickness indicates that truck superload (Case 2) is the controlling factor. When total calculated thickness is not followed by asterisk, surge pressure (Case 1) is the controlling factor. See Sec. 1–2.1.

Sec. 1–2—General Procedure for Thickness Determination

Sec. 1–2.1—Scope

This section gives the general method for determining the thicknesses of cast-iron pressure pipe. Thickness nomograms (Fig. 1–1 through 1–5) are included for two commonly used iron strengths (18/40 and 21/45); thicknesses for other iron strengths may be computed by the method presented in Sec. 1–3.1.

The required thickness of cast-iron pipe is determined by considering trench load and internal pressure in combination, and calculations of net thickness are made for two cases, namely:

Case 1. Trench load (earth load but no truck superload) in combination with internal pressure (working pressure plus surge pressure) and with a 2.5 factor of safety applied to both trench load and internal pressure

Case 2. Trench load (earth load plus truck superload) in combination with internal pressure (working pressure but no surge pressure) and with a 2.5 factor of safety applied to both trench load and internal pressure.

The larger thickness thus determined is chosen as the net thickness (only Case 2 is used for gas pipe). To the net thickness is added a corrosion allowance to obtain the minimum manufacturing thickness and a casting tolerance to obtain the total calculated thickness. Finally, the thickness for specifying and ordering is selected from a table of standard class thicknesses.

An example of this method is shown in Sec. 1–2.3.

Sec. 1–2.2—Procedure for Thickness Determination

This section gives the procedure for determining total calculated thicknesses and standard class thicknesses for pipe. This procedure was used in calculating the values shown in Sec. 1–1, Tables 1–1, 1–2 and 1–3.

1–2.2.1—*Determination of Net Thickness*

The net thickness for the more usual conditions may be readily determined using Tables 1–4 and 1–5 and the nomograms in Fig. 1–1 through 1–5. The bases for these tables and nomograms are described in Sec. 1–3. The three most commonly used methods of laying pipe, called "laying conditions," are defined below:

Laying Condition	*Description*
A	Pipe laid on flat-bottom trench, backfill not tamped
B	Pipe laid on flat-bottom trench, backfill tamped
F	Pipe bedded in gravel or sand, backfill tamped

After the pipe size, working pressure, iron strength, laying condition, and depth of cover have been established, the procedure for determining net thickness is as follows:

a. From Table 1–4, select for both Case 1 and Case 2 the value of w, which is the ring test load equivalent of trench load including a 2.5 safety factor (see Sec. 1–3.1 for definition of ring test load equivalent).

b. From Table 1–5, select for both Case 1 and Case 2 the value of p, which is the internal pressure including a 2.5 safety factor.

c. Thickness nomograms are provided in Fig. 1–1 through 1–5 for iron strengths of 18/40 * and 21/45.* Se-

* The first figure designates the bursting tensile strength in 1,000 psi and the second figure designates the ring modulus of rupture in 1,000 psi.

TABLE 1-3 (*Continued*)

Schedule of Barrel Thickness for Gas Pipe of 18/40 Iron Strength

Laying Condition	Depth of Cover *ft*	Thickness Specifications	Internal Pressure—*psi* 10	50	100	150	200	250
			Barrel Thicknesses—*in.*					
Forty-eight-Inch Gas Pipe								
A	2½	Calculated Thickness	*1.10*	*1.14*	*1.19*	*1.25*		
		Use Thickness Class	23	23	24	24		
		Use Thickness	1.14	1.14	1.23	1.23		
	3½	Calculated Thickness	*1.11*	*1.14*	*1.20*	*1.26*		
		Use Thickness Class	23	23	24	24		
		Use Thickness	1.14	1.14	1.23	1.23		
	5	Calculated Thickness	*1.18*	*1.22*	*1.27*	*1.32*		
		Use Thickness Class	23	24	24	25		
		Use Thickness	1.14	1.23	1.23	1.33		
	8	Calculated Thickness	*1.29*	*1.33*	*1.38*	*1.43*		
		Use Thickness Class	25	25	25	26		
		Use Thickness	1.33	1.33	1.33	1.44		
	12	Calculated Thickness	*1.43*	*1.47*	*1.52*	*1.57*		
		Use Thickness Class	26	26	27	27		
		Use Thickness	1.44	1.44	1.56	1.56		
	16	Calculated Thickness	*1.55*	*1.58*	*1.63*	*1.69*		
		Use Thickness Class	27	27	28	28		
		Use Thickness	1.56	1.56	1.68	1.68		
B	2½	Calculated Thickness	*.93*	*.97*	*1.03*	*1.09*		
		Use Thickness Class	21	21	22	22		
		Use Thickness	.98	.98	1.06	1.06		
	3½	Calculated Thickness	*.94*	*.98*	*1.03*	*1.10*		
		Use Thickness Class	21	21	22	23		
		Use Thickness	.98	.98	1.06	1.14		
	5	Calculated Thickness	*.99*	*1.03*	*1.09*	*1.15*		
		Use Thickness Class	21	22	22	23		
		Use Thickness	.98	1.06	1.06	1.14		
		Calculated Thickness	*1.09*	*1.12*	*1.17*	*1.24*		
		Use Thickness Class	22	23	23	24		
		Use Thickness	1.06	1.14	1.14	1.23		
	12	Calculated Thickness	*1.21*	*1.25*	*1.30*	*1.35*		
		Use Thickness Class	24	24	25	25		
		Use Thickness	1.23	1.23	1.33	1.33		
	16	Calculated Thickness	*1.30*	*1.34*	*1.38*	*1.44*		
		Use Thickness Class	25	25	25	26		
		Use Thickness	1.33	1.33	1.33	1.44		
F	2½	Calculated Thickness	*.84*	*.88*	*.93*	*1.00*		
		Use Thickness Class	21	21	21	21		
		Use Thickness	.98	.98	.98	.98		
	3½	Calculated Thickness	*.84*	*.88*	*.94*	*1.01*		
		Use Thickness Class	21	21	21	21		
		Use Thickness	.98	.98	.98	.98		
	5	Calculated Thickness	*.90*	*.93*	*.99*	*1.06*		
		Use Thickness Class	21	21	21	22		
		Use Thickness	.98	.98	.98	1.06		
	8	Calculated Thickness	*.97*	*1.01*	*1.07*	*1.13*		
		Use Thickness Class	21	21	22	23		
		Use Thickness	.98	.98	1.06	1.14		
	12	Calculated Thickness	*1.08*	*1.12*	*1.16*	*1.23*		
		Use Thickness Class	22	23	23	24		
		Use Thickness	1.06	1.14	1.14	1.23		
	16	Calculated Thickness	*1.15*	*1.20*	*1.25*	*1.31*		
		Use Thickness Class	23	24	24	25		
		Use Thickness	1.14	1.23	1.23	1.33		

TABLE 1-2 (*Continued*)

Schedule of Barrel Thickness for Water Pipe of 21/45 Iron Strength

Laying Condition	Depth of Cover *ft*	Thickness Specifications	Internal Pressure—*psi* 50	100	150	200	250	300	350
			Barrel Thickness—*in.*						
Thirty-Inch Water Pipe									
A	2½	Calculated Thickness	0.79*	0.81*	0.84*	0.88*	0.92*	0.96*	1.01*
		Use Thickness Class	22	22	23	23	24	25	25
		Use Thickness	0.79	0.79	0.85	0.85	0.92	0.99	0.99
	3½	Calculated Thickness	0.78*	0.81*	0.84*	0.87*	0.91*	0.95*	1.00
		Use Thickness Class	22	22	23	23	24	24	25
		Use Thickness	0.79	0.79	0.85	0.85	0.92	0.92	0.99
	5	Calculated Thickness	0.82*	0.85*	0.88*	0.91*	0.94	1.00	1.06
		Use Thickness Class	23	23	23	24	24	25	26
		Use Thickness	0.85	0.85	0.85	0.92	0.92	0.99	1.07
	8	Calculated Thickness	0.89*	0.92	0.95	0.99	1.04	1.09	1.14
		Use Thickness Class	24	24	24	25	26	26	27
		Use Thickness	0.92	0.92	0.92	0.99	1.07	1.07	1.16
	12	Calculated Thickness	0.99	1.02	1.05	1.09	1.13	1.17	1.22
		Use Thickness Class	25	25	26	26	27	27	28
		Use Thickness	0.99	0.99	1.07	1.07	1.16	1.16	1.25
	16	Calculated Thickness	1.06	1.09	1.12	1.16	1.20	1.24	1.28
		Use Thickness Class	26	26	27	27	27	28	28
		Use Thickness	1.07	1.07	1.16	1.16	1.16	1.25	1.25
B	2½	Calculated Thickness	0.70*	0.73*	0.76*	0.80*	0.84*	0.89*	0.96
		Use Thickness Class	20	21	22	22	23	24	25
		Use Thickness	0.68	0.73	0.79	0.79	0.85	0.92	0.99
	3½	Calculated Thickness	0.69*	0.72*	0.75*	0.79*	0.83*	0.90	0.98
		Use Thickness Class	20	21	21	22	23	24	25
		Use Thickness	0.68	0.73	0.73	0.79	0.85	0.92	0.99
	5	Calculated Thickness	0.73*	0.76*	0.79*	0.83*	0.88	0.95	1.02
		Use Thickness Class	21	22	22	23	23	24	25
		Use Thickness	0.73	0.79	0.79	0.85	0.85	0.92	0.99
	8	Calculated Thickness	0.79	0.83	0.86	0.91	0.96	1.01	1.07
		Use Thickness Class	22	23	23	24	25	25	26
		Use Thickness	0.79	0.85	0.85	0.92	0.99	0.99	1.07
	12	Calculated Thickness	0.88	0.91	0.95	0.99	1.03	1.08	1.14
		Use Thickness Class	23	24	24	25	26	26	27
		Use Thickness	0.85	0.92	0.92	0.99	1.07	1.07	1.16
	16	Calculated Thickness	0.94	0.97	1.01	1.05	1.09	1.13	1.18
		Use Thickness Class	24	25	25	26	26	27	27
		Use Thickness	0.92	0.99	0.99	1.07	1.07	1.16	1.16
F	2½	Calculated Thickness	0.64*	0.67*	0.70*	0.74*	0.79*	0.87	0.96
		Use Thickness class	20	20	20	21	22	23	25
		Use Thickness	0.63	0.68	0.68	0.73	0.79	0.85	0.99
	3½	Calculated Thickness	0.63*	0.66*	0.69*	0.73*	0.81	0.88	0.97
		Use Thickness Class	20	20	20	21	22	23	25
		Use Thickness	0.68	0.68	0.68	0.73	0.79	0.85	0.99
	5	Calculated Thickness	0.66*	0.69*	0.73	0.78	0.85	0.92	0.99
		Use Thickness Class	20	20	21	22	23	24	25
		Use Thickness	0.68	0.68	0.73	0.79	0.85	0.92	0.99
	8	Calculated Thickness	0.72	0.76	0.80	0.85	0.90	0.96	1.03
		Use Thickness Class	21	22	22	23	24	25	26
		Use Thickness	0.73	0.79	0.79	0.85	0.92	0.99	1.07
	12	Calculated Thickness	0.80	0.84	0.87	0.91	0.96	1.02	1.08
		Use Thickness Class	22	23	23	24	25	25	26
		Use Thickness	0.79	0.85	0.85	0.92	0.99	0.99	1.07
	16	Calculated Thickness	0.85	0.89	0.92	0.96	1.01	1.06	1.12
		Use Thickness Class	23	24	24	25	25	26	27
		Use Thickness	0.85	0.92	0.92	0.99	0.99	1.07	1.16

* Asterisk following total calculated thickness indicates that truck superload (Case 2) is the controlling factor. When total calculated thickness is not followed by asterisk, surge pressure (Case 1) is the controlling factor. See Sec. 1-2.1.

TABLE 1–2 (*Continued*)

Schedule of Barrel Thickness for Water Pipe of 21/45 Iron Strength

Laying Condition	Depth of Cover *ft*	Thickness Specifications	Internal Pressure—*psi* 50	100	150	200	250	300	350
			Barrel Thickness—*in.*						
Thirty-six-Inch Water Pipe									
A	2½	Calculated Thickness	0.89*	0.92*	0.96*	1.00*	1.05*	1.10*	1.16*
		Use Thickness Class	22	23	23	24	24	25	26
		Use Thickness	0.87	0.94	0.94	1.02	1.02	1.10	1.19
	3½	Calculated Thickness	0.88*	0.92*	0.95*	1.00*	1.04*	1.10*	1.15
		Use Thickness Class	22	23	23	24	24	25	26
		Use Thickness	0.87	0.94	0.94	1.02	1.02	1.10	1.19
	5	Calculated Thickness	0.93*	0.96*	1.00*	1.04*	1.09*	1.14	1.22
		Use Thickness Class	23	23	24	24	25	25	26
		Use Thickness	0.94	0.94	1.02	1.02	1.10	1.10	1.19
	8	Calculated Thickness	1.01*	1.04*	1.08	1.13	1.18	1.24	1.31
		Use Thickness Class	24	24	25	25	26	27	27
		Use Thickness	1.02	1.02	1.10	1.10	1.19	1.29	1.29
	12	Calculated Thickness	1.13	1.16	1.20	1.25	1.30	1.35	1.41
		Use Thickness Class	25	26	26	27	27	28	28
		Use Thickness	1.10	1.19	1.19	1.29	1.29	1.39	1.39
	16	Calculated Thickness	1.22	1.25	1.29	1.33	1.38	1.43	1.48
		Use Thickness Class	26	27	27	27	28	28	29
		Use Thickness	1.19	1.29	1.29	1.29	1.39	1.39	1.50
B	2½	Calculated Thickness	0.78*	0.81*	0.85*	0.90*	0.95*	1.01*	1.12
		Use Thickness Class	21	21	22	22	23	24	25
		Use Thickness	0.81	0.81	0.87	0.87	0.94	1.02	1.10
	3½	Calculated Thickness	0.77*	0.81*	0.85*	0.89*	0.95*	1.03	1.12
		Use Thickness Class	20	21	22	22	23	24	25
		Use Thickness	0.75	0.81	0.87	0.87	0.94	1.02	1.10
	5	Calculated Thickness	0.81*	0.85*	0.89*	0.93*	1.00	1.08	1.16
		Use Thickness Class	21	22	22	23	24	25	26
		Use Thickness	.81	.87	.87	.94	1.02	1.10	1.19
	8	Calculated Thickness	0.88	0.92	0.97	1.02	1.08	1.15	1.22
		Use Thickness Class	22	23	23	24	25	26	26
		Use Thickness	0.87	0.94	0.94	1.02	1.10	1.19	1.19
	12	Calculated Thickness	0.99	1.02	1.07	1.12	1.17	1.23	1.30
		Use Thickness Class	24	24	25	25	26	26	27
		Use Thickness	1.02	1.02	1.10	1.10	1.19	1.19	1.29
	16	Calculated Thickness	1.06	1.10	1.14	1.19	1.24	1.29	1.35
		Use Thickness Class	25	25	25	26	27	27	28
		Use Thickness	1.10	1.10	1.10	1.19	1.29	1.29	1.39
F	2½	Calculated Thickness	0.71*	0.74*	0.78*	0.83*	0.90	1.00	1.10
		Use Thickness Class	20	20	21	21	22	24	25
		Use Thickness	0.75	0.75	0.81	0.81	0.87	1.02	1.10
	3½	Calculated Thickness	0.70*	0.74*	0.78*	0.83	0.92	1.01	1.11
		Use Thickness Class	20	20	21	21	23	24	25
		Use Thickness	0.75	0.75	0.81	0.81	0.94	1.02	1.10
	5	Calculated Thickness	0.74*	0.77*	0.82	0.88	0.96	1.05	1.14
		Use Thickness Class	20	20	21	22	23	24	25
		Use Thickness	0.75	0.75	0.81	0.87	0.94	1.02	1.10
	8	Calculated Thickness	0.81	0.85	0.90	0.96	1.02	1.10	1.18
		Use Thickens Class	21	22	22	23	24	25	26
		Use Thickness	0.81	0.87	0.87	0.94	1.02	1.10	1.19
	12	Calculated Thickness	0.90	0.94	0.98	1.04	1.09	1.16	1.23
		Use Thickness Class	22	23	24	24	25	26	26
		Use Thickness	0.87	0.94	1.02	1.02	1.10	1.19	1.19
	16	Calculated Thickness	0.96	1.00	1.04	1.09	1.15	1.21	1.28
		Use Thickness Class	23	24	24	25	26	26	27
		Use Thickness	0.94	1.02	1.02	1.10	1.19	1.19	1.29

* Asterisk following total calculated thickness indicates that truck superload (Case 2) is the controlling factor. When total calculated thickness is not followed by asterisk, surge pressure (Case 1) is the controlling factor. See Sec. 1–2.1.

TABLE 1–3 (*Continued*)

Schedule of Barrel Thickness for Gas Pipe of 18/40 Iron Strength

Laying Condition	Depth of Cover *ft*	Thickness Specifications	Internal Pressure—*psi* 10	50	100	150	200	250
			Barrel Thicknesses—*in.*					
Forty-two-Inch Gas Pipe								
A	2½	Calculated Thickness	*1.01*	*1.04*	*1.08*	*1.14*		
		Use Thickness Class	23	23	23	24		
		Use Thickness	1.05	1.05	1.05	1.13		
	3½	Calculated Thickness	*1.01*	*1.04*	*1.08*	*1.14*		
		Use Thickness Class	23	23	23	24		
		Use Thickness	1.05	1.05	1.05	1.13		
	5	Calculated Thickness	*1.07*	*1.09*	*1.14*	*1.19*		
		Use Thickness Class	23	24	24	25		
		Use Thickness	1.05	1.13	1.13	1.22		
	8	Calculated Thickness	*1.16*	*1.19*	*1.24*	*1.29*		
		Use Thickness Class	24	25	25	26		
		Use Thickness	1.13	1.22	1.22	1.32		
	12	Calculated Thickness	*1.29*	*1.32*	*1.36*	*1.41*		
		Use Thickness Class	26	26	26	27		
		Use Thickness	1.32	1.32	1.32	1.43		
	16	Calculated Thickness	*1.39*	*1.42*	*1.46*	*1.51*		
		Use Thickness Class	27	27	27	28		
		Use Thickness	1.43	1.43	1.43	1.54		
B	2½	Calculated Thickness	*.86*	*.89*	*.94*	*1.00*		
		Use Thickness Class	21	21	22	22		
		Use Thickness	.90	.90	.97	.97		
	3½	Calculated Thickness	*.86*	*.89*	*.94*	*1.00*		
		Use Thickness Class	21	21	22	22		
		Use Thickness	.90	.90	.97	.97		
	5	Calculated Thickness	*.91*	*.94*	*.98*	*1.04*		
		Use Thickness Class	21	22	22	23		
		Use Thickness	.90	.97	.97	1 05		
	8	Calculated Thickness	*.99*	*1.02*	*1.07*	*1.12*		
		Use Thickness Class	22	23	23	24		
		Use Thickness	.97	1.05	1.05	1.13		
	12	Calculated Thickness	*1.10*	*1.13*	*1.17*	*1.22*		
		Use Thickness Class	24	24	24	25		
		Use Thickness	1.13	1.13	1.13	1.22		
	16	Calculated Thickness	*1.18*	*1.21*	*1.25*	*1.30*		
		Use Thickness Class	25	25	25	26		
		Use Thickness	1.22	1.22	1.22	1.32		
F	2½	Calculated Thickness	*.77*	*.80*	*.86*	*.92*		
		Use Thickness Class	21	21	21	21		
		Use Thickness	.90	.90	.90	.90		
	3½	Calculated Thickness	*.77*	*.80*	*.86*	*.92*		
		Use Thickness Class	21	21	21	21		
		Use Thickness	.90	.90	.90	.90		
	5	Calculated Thickness	*.82*	*.85*	*.90*	*.96*		
		Use Thickness Class	21	21	21	22		
		Use Thickness	.90	.90	.90	.97		
	8	Calculated Thickness	*.89*	*.92*	*.97*	*1.03*		
		Use Thickness Class	21	21	22	23		
		Use Thickness	.90	.90	.97	1.05		
	12	Calculated Thickness	*.98*	*1.01*	*1.06*	*1.11*		
		Use Thickness Class	22	23	23	24		
		Use Thickness	.97	1.05	1.05	1.13		
	16	Calculated Thickness	*1.06*	*1.08*	*1.13*	*1.18*		
		Use Thickness Class	23	23	24	25		
		Use Thickness	1.05	1.05	1.13	1.22		

TABLE 1–3 (*Continuea*)

Schedule of Barrel Thickness for Gas Pipe of 18/40 Iron Strength

Laying Condition	Depth of Cover *ft*	Thickness Specifications	Internal Pressure—*psi* 10	50	100	150	200	250
			Barrel Thicknesses—*in.*					
		Thirty-six-Inch Gas Pipe						
A	2½	Calculated Thickness	*.91*	*.94*	*.98*	*1.02*		
		Use Thickness Class	23	23	24	24		
		Use Thickness	.94	.94	1.02	1.02		
	3½	Calculated Thickness	*.90*	*.93*	*.97*	*1.02*		
		Use Thickness Class	22	23	23	24		
		Use Thickness	.87	.94	.94	1.02		
	5	Calculated Thickness	*.95*	*.98*	*1.02*	*1.07*		
		Use Thickness Class	23	24	24	25		
		Use Thickness	.94	1.02	1.02	1.10		
	8	Calculated Thickness	*1.04*	*1.07*	*1.11*	*1.15*		
		Use Thickness Class	24	25	25	26		
		Use Thickness	1.02	1.10	1.10	1.19		
	12	Calculated Thickness	*1.15*	*1.17*	*1.21*	*1.25*		
		Use Thickness Class	26	26	26	27		
		Use Thickness	1.19	1.19	1.19	1.29		
	16	Calculated Thickness	*1.23*	*1.26*	*1.29*	*1.33*		
		Use Thickness Class	26	27	27	27		
		Use Thickness	1.19	1.29	1.29	1.29		
B	2½	Calculated Thickness	*.79*	*.82*	*.86*	*.91*		
		Use Thickness Class	21	21	22	23		
		Use Thickness	.81	.81	.87	.94		
	3½	Calculated Thickness	*.79*	*.81*	*.85*	*.90*		
		Use Thickness Class	21	21	22	22		
		Use Thickness	.81	.81	.87	.87		
	5	Calculated Thickness	*.83*	*.86*	*.90*	*.94*		
		Use Thickness Class	21	22	22	23		
		Use Thickness	.81	.87	.87	.94		
	8	Calculated Thickness	*.90*	*.93*	*.96*	*1.01*		
		Use Thickness Class	22	23	23	24		
		Use Thickness	.87	.94	.94	1.02		
	12	Calculated Thickness	*.99*	*1.01*	*1.05*	*1.10*		
		Use Thickness Class	24	24	24	25		
		Use Thickness	1.02	1.02	1.02	1.10		
	16	Calculated Thickness	*1.06*	*1.08*	*1.13*	*1.17*		
		Use Thickness Class	25	25	25	26		
		Use Thickness	1.10	1.10	1.10	1.19		
F	2½	Calculated Thickness	*.71*	*.73*	*.79*	*.84*		
		Use Thickness Class	21	21	21	22		
		Use Thickness	.81	.81	.81	.87		
	3½	Calculated Thickness	*.71*	*.73*	*.78*	*.83*		
		Use Thickness Class	21	21	21	21		
		Use Thickness	.81	.81	.81	.81		
	5	Calculated Thickness	*.75*	*.78*	*.82*	*.87*		
		Use Thickness Class	21	21	21	22		
		Use Thickness	.81	.81	.81	.87		
	8	Calculated Thickness	*.81*	*.84*	*.88*	*.93*		
		Use Thickness Class	21	22	22	23		
		Use Thickness	.81	.87	.87	.94		
	12	Calculated Thickness	*.89*	*.91*	*.95*	*1.00*		
		Use Thickness Class	22	23	23	24		
		Use Thickness	.87	.94	.94	1.02		
	16	Calculated Thickness	*.95*	*.97*	*1.01*	*1.06*		
		Use Thickness Class	23	23	24	25		
		Use Thickness	.94	.94	1.02	1.10		

TABLE 1–2 (*Continued*)

Schedule of Barrel Thickness for Water Pipe of 21/45 Iron Strength

Laying Condition	Depth of Cover *ft*	Thickness Specifications	Internal Pressure—*psi* 50	100	150	200	250	300	350
			Barrel Thickness—*in.*						
		Forty-two-Inch Water Pipe							
A	2½	Calculated Thickness	0.99*	1.02*	1.07*	1.12*	1.17*	1.24*	1.31*
		Use Thickness Class	22	23	23	24	24	25	26
		Use Thickness	0.97	1.05	1.05	1.13	1.13	1.22	1.32
	3½	Calculated Thickness	0.99*	1.02*	1.07*	1.12*	1.17*	1.24*	1.30
		Use Thickness Class	22	23	23	24	24	25	26
		Use Thickness	0.97	1.05	1.05	1.13	1.13	1.22	1.32
	5	Calculated Thickness	1.04*	1.08*	1.12*	1.17*	1.22*	1.28*	1.37
		Use Thickness Class	23	23	24	24	25	26	26
		Use Thickness	1.05	1.05	1.13	1.13	1.22	1.32	1.32
	8	Calculated Thickness	1.13*	1.17*	1.21	1.27	1.33	1.40	1.48
		Use Thickness Class	24	24	25	26	26	27	27
		Use Thickness	1.13	1.13	1.22	1.32	1.32	1.43	1.43
	12	Calculated Thickness	1.26	1.30	1.35	1.40	1.46	1.52	1.59
		Use Thickness Class	25	26	26	27	27	28	28
		Use Thickness	1.22	1.32	1.32	1.43	1.43	1.54	1.54
	16	Calculated Thickness	1.37	1.41	1.46	1.51	1.56	1.62	1.68
		Use Thickness Class	26	27	27	28	28	29	29
		Use Thickness	1.32	1.43	1.43	1.54	1.54	1.66	1.66
B	2½	Calculated Thickness	0.85*	0.89*	0.94*	0.99*	1.05*	1.13	1.25
		Use Thickness Class	20	21	22	22	23	24	25
		Use Thickness	0.83	0.90	0.97	0.97	1.05	1.13	1.22
	3½	Calculated Thickness	0.85*	0.89*	0.94*	0.99*	1.05	1.15	1.27
		Use Thickness Class	20	21	22	22	23	24	26
		Use Thickness	0.83	0.90	0.97	0.97	1.05	1.13	1.32
	5	Calculated Thickness	0.89*	0.93*	0.98*	1.03*	1.11	1.21	1.31
		Use Thickness Class	21	21	22	23	24	25	26
		Use Thickness	0.90	0.90	0.97	1.05	1.13	1.22	1.32
	8	Calculated Thickness	0.97	1.02	1.07	1.13	1.21	1.29	1.37
		Use Thickness Class	22	23	23	24	25	26	26
		Use Thickness	0.97	1.05	1.05	1.13	1.22	1.32	1.32
	12	Calculated Thickness	1.09	1.13	1.18	1.24	1.30	1.38	1.45
		Use Thickness Class	24	24	25	25	26	27	27
		Use Thickness	1.13	1.13	1.22	1.22	1.32	1.43	1.43
	16	Calculated Thickness	1.18	1.22	1.27	1.32	1.38	1.45	1.52
		Use Thickness Class	25	25	26	26	27	27	28
		Use Thickness	1.22	1.22	1.32	1.32	1.43	1.43	1.54
F	2½	Calculated Thickness	0.77*	0.81*	0.86*	0.92*	1.00	1.12	1.24
		Use Thickness Class	20	20	20	21	22	24	25
		Use Thickness	0.83	0.83	0.83	0.90	0.97	1.13	1.22
	3½	Calculated Thickness	0.77*	0.81*	0.86*	0.92*	1.02	1.14	1.25
		Use Thickness Class	20	20	20	21	23	24	25
		Use Thickness	0.83	0.83	0.83	0.90	1.05	1.13	1.22
	5	Calculated Thickness	0.81*	0.85*	0.90	0.98	1.07	1.17	1.28
		Use Thickness Class	20	20	21	22	23	24	26
		Use Thickness	0.83	0.83	0.90	0.97	1.05	1.13	1.32
	8	Calculated Thickness	0.89	0.94	0.99	1.06	1.14	1.23	1.33
		Use Thickness Class	21	22	22	23	24	25	26
		Use Thickness	0.90	0.97	0.97	1.05	1.13	1.22	1.32
	12	Calculated Thickness	0.99	1.03	1.09	1.15	1.22	1.30	1.39
		Use Thickness Class	22	23	24	24	25	26	27
		Use Thickness	0.97	1.05	1.13	1.13	1.22	1.32	1.43
	16	Calculated Thickness	1.07	1.11	1.16	1.21	1.28	1.36	1.44
		Use Thickness Class	23	24	24	25	26	26	27
		Use Thickness	1.05	1.13	1.13	1.22	1.32	1.32	1.43

* Asterisk following total calculated thickness indicates that truck superload (Case 2) is the controlling factor. When total calculated thickness is not followed by asterisk, surge pressure (Case 1) is the controlling factor. See Sec. 1-2.1.

TABLE 1-2 (*Continued*)

Schedule of Barrel Thickness for Water Pipe of 21/45 Iron Strength

Laying Condition	Depth of Cover *ft*	Thickness Specifications	Internal Pressure—*psi* 50	100	150	200	250	300	350
			Barrel Thickness—*in.*						
Forty-eight-Inch Water Pipe									
A	2½	Calculated Thickness	1.08*	1.12*	1.17*	1.23*	1.29*	1.37*	1.45*
		Use Thickness Class	22	23	23	24	25	25	26
		Use Thickness	1.06	1.14	1.14	1.23	1.33	1.33	1.44
	3½	Calculated Thickness	1.09*	1.13*	1.18*	1.24*	1.30*	1.37*	1.46
		Use Thickness Class	22	23	23	24	25	25	26
		Use Thickness	1.06	1.14	1.14	1.23	1.33	1.33	1.44
	5	Calculated Thickness	1.15*	1.19*	1.24*	1.30*	1.36*	1.43	1.53
		Use Thickness Class	23	24	24	25	25	26	27
		Use Thickness	1.14	1.23	1.23	1.33	1.33	1.44	1.56
	8	Calculated Thickness	1.25*	1.29*	1.34	1.41	1.48	1.56	1.65
		Use Thickness Class	24	25	25	26	26	27	28
		Use Thickness	1.23	1.33	1.33	1.44	1.44	1.56	1.68
	12	Calculated Thickness	1.41	1.45	1.51	1.57	1.63	1.70	1.77
		Use Thickness Class	26	26	27	27	28	28	29
		Use Thickness	1.44	1.44	1.56	1.56	1.68	1.68	1.81
	16	Calculated Thickness	1.53	1.58	1.63	1.68	1.75	1.81	1.89
		Use Thickness Class	27	27	28	28	29	29	30
		Use Thickness	1.56	1.56	1.68	1.68	1.81	1.81	1.95
B	2½	Calculated Thickness	0.92*	0.97*	1.02*	1.08*	1.16*	1.26	1.40
		Use Thickness Class	20	21	22	22	23	24	26
		Use Thickness	0.91	0.98	1.06	1.06	1.14	1.23	1.44
	3½	Calculated Thickness	0.93*	0.97*	1.03*	1.09*	1.17	1.29	1.42
		Use Thickness Class	20	21	22	22	23	25	26
		Use Thickness	0.91	0.98	1.06	1.06	1.14	1.33	1.44
	5	Calculated Thickness	0.98*	1.02*	1.08*	1.14	1.23	1.34	1.46
		Use Thickness Class	21	22	22	23	24	25	26
		Use Thickness	0.98	1.06	1.06	1.14	1.23	1.33	1.44
	8	Calculated Thickness	1.06	1.12	1.18	1.25	1.34	1.43	1.53
		Use Thickness Class	22	23	23	24	25	26	27
		Use Thickness	1.06	1.14	1.14	1.23	1.33	1.44	1.56
	12	Calculated Thickness	1.20	1.25	1.31	1.37	1.45	1.53	1.62
		Use Thickness Class	24	24	25	25	26	27	28
		Use Thickness	1.23	1.23	1.33	1.33	1.44	1.56	1.68
	16	Calculated Thickness	1.30	1.35	1.41	1.47	1.54	1.61	1.70
		Use Thickness Class	25	25	26	26	27	27	28
		Use Thickness	1.33	1.33	1.44	1.44	1.56	1.56	1.68
F	2½	Calculated Thickness	0.83*	0.88*	0.94*	1.01*	1.12	1.25	1.39
		Use Thickness Class	20	20	20	21	23	24	26
		Use Thickness	0.91	0.91	0.91	0.98	1.14	1.23	1.44
	3½	Calculated Thickness	0.84*	0.89*	0.94*	1.02	1.14	1.27	1.40
		Use Thickness Class	20	20	20	22	23	24	26
		Use Thickness	0.91	0.91	0.91	1.06	1.14	1.23	1.44
	5	Calculated Thickness	0.88*	0.93*	0.99	1.08	1.19	1.30	1.43
		Use Thickness Class	20	20	21	22	24	25	26
		Use Thickness	0.91	0.91	0.98	1.06	1.23	1.33	1.44
	8	Calculated Thickness	0.97	1.03	1.09	1.17	1.27	1.37	1.48
		Use Thickness Class	21	22	22	23	24	25	26
		Use Thickness	0.98	1.06	1.06	1.14	1.23	1.33	1.44
	12	Calculated Thickness	1.09	1.14	1.20	1.27	1.35	1.45	1.55
		Use Thickness Class	22	23	24	24	25	26	27
		Use Thickness	1.06	1.14	1.23	1.23	1.33	1.44	1.56
	16	Calculated Thickness	1.17	1.23	1.28	1.35	1.43	1.51	1.60
		Use Thickness Class	23	24	25	25	26	27	27
		Use Thickness	1.14	1.23	1.33	1.33	1.44	1.56	1.56

* Asterisk following total calculated thickness indicates that truck superload (Case 2) is the controlling factor. When total calculated thickness is not followed by asterisk, surge pressure (Case 1) is the controlling factor. See Sec. 1-2.1.

TABLE 1-3 (*Continued*)

Schedule of Barrel Thickness for Gas Pipe of 18/40 Iron Strength

Laying Condition	Depth of Cover *ft*	Thickness Specifications	Internal Pressure—*psi* 10	50	100	150	200	250
			Barrel Thicknesses—*in.*					
Thirty-Inch Gas Pipe								
A	2½	Calculated Thickness	.80	.83	.86	.90		
		Use Thickness Class	22	23	23	24		
		Use Thickness	.79	.85	.85	.92		
	3½	Calculated Thickness	.79	.82	.85	.89		
		Use Thickness Class	22	23	23	24		
		Use Thickness	.79	.85	.85	.92		
	5	Calculated Thickness	.84	.86	.90	.93		
		Use Thickness Class	23	23	24	24		
		Use Thickness	.85	.85	.92	.92		
	8	Calculated Thickness	.92	.94	.97	1.01		
		Use Thickness Class	24	24	25	25		
		Use Thickness	.92	.92	.99	.99		
	12	Calculated Thickness	1.01	1.03	1.06	1.09		
		Use Thickness Class	25	26	26	26		
		Use Thickness	.99	1.07	1.07	1.07		
	16	Calculated Thickness	1.07	1.09	1.12	1.15		
		Use Thickness Class	26	26	27	27		
		Use Thickness	1.07	1.07	1.16	1.16		
B	2½	Calculated Thickness	.69	.74	.77	.81		
		Use Thickness Class	21	21	22	22		
		Use Thickness	.73	.73	.79	.79		
	3½	Calculated Thickness	.69	.73	.76	.80		
		Use Thickness Class	21	21	22	22		
		Use Thickness	.73	.73	.79	.79		
	5	Calculated Thickness	.75	.77	.80	.85		
		Use Thickness Class	21	22	22	23		
		Use Thickness	.73	.79	.79	.85		
	8	Calculated Thickness	.81	.83	.86	.90		
		Use Thickness Class	22	23	23	24		
		Use Thickness	.79	.85	.85	.92		
	12	Calculated Thickness	.88	.90	.93	.97		
		Use Thickness Class	23	24	24	25		
		Use Thickness	.85	.92	.92	.99		
	16	Calculated Thickness	.94	.96	.99	1.03		
		Use Thickness Class	24	25	25	26		
		Use Thickness	.92	.99	.99	1.07		
F	2½	Calculated Thickness	.63	.66	.70	.74		
		Use Thickness Class	21	21	21	21		
		Use Thickness	.73	.73	.73	.73		
	3½	Calculated Thickness	.63	.66	.70	.74		
		Use Thickness Class	21	21	21	21		
		Use Thickness	.73	.73	.73	.73		
	5	Calculated Thickness	.68	.70	.73	.77		
		Use Thickness Class	21	21	21	22		
		Use Thickness	.73	.73	.73	.79		
	8	Calculated Thickness	.73	.75	.79	.83		
		Use Thickness Class	21	21	22	23		
		Use Thickness	.73	.73	.79	.85		
	12	Calculated Thickness	.79	.81	.85	.88		
		Use Thickness Class	22	22	23	23		
		Use Thickness	.79	.79	.85	.85		
	16	Calculated Thickness	.84	.86	.90	.93		
		Use Thickness Class	23	23	24	24		
		Use Thickness	.85	.85	.92	.92		

TABLE 1-3 (*Continued*)

Schedule of Barrel Thickness for Gas Pipe of 18/40 Iron Strength

Laying Condition	Depth of Cover *ft*	Thickness Specifications	Internal Pressure—*psi* 10	50	100	150	200	250
			Barrel Thicknesses—*in.*					
		Twenty-four-Inch Gas Pipe						
A	2½	Calculated Thickness	.67	.69	.72	.75	.78	
		Use Thickness Class	22	22	23	23	24	
		Use Thickness	.68	.68	.73	.73	.79	
	3½	Calculated Thickness	.67	.69	.71	.74	.78	
		Use Thickness Class	22	22	23	23	24	
		Use Thickness	.68	.68	.73	.73	.79	
	5	Calculated Thickness	.71	.72	.75	.78	.81	
		Use Thickness Class	23	23	23	24	24	
		Use Thickness	.73	.73	.73	.79	.79	
	8	Calculated Thickness	.77	.79	.81	.84	.87	
		Use Thickness Class	24	24	24	25	25	
		Use Thickness	.79	.79	.79	.85	.85	
	12	Calculated Thickness	.84	.86	.88	.91	.94	
		Use Thickness Class	25	25	25	26	26	
		Use Thickness	.85	.85	.85	.92	.92	
	16	Calculated Thickness	.90	.91	.94	.97	1.00	
		Use Thickness Class	26	26	26	27	27	
		Use Thickness	.92	.92	.92	.99	.99	
B	2½	Calculated Thickness	.61	.63	.65	.68	.72	
		Use Thickness Class	21	21	21	22	23	
		Use Thickness	.63	.63	.63	.68	.73	
	3½	Calculated Thickness	.59	.62	.65	.68	.71	
		Use Thickness Class	21	21	21	22	23	
		Use Thickness	.63	.63	.63	.68	.73	
	5	Calculated Thickness	.63	.65	.67	.71	.75	
		Use Thickness Class	21	21	22	23	23	
		Use Thickness	.63	.63	.68	.73	.73	
	8	Calculated Thickness	.69	.71	.73	.76	.79	
		Use Thickness Class	22	23	23	24	24	
		Use Thickness	.68	.73	.73	.79	.79	
	12	Calculated Thickness	.75	.77	.79	.82	.85	
		Use Thickness Class	23	24	24	25	25	
		Use Thickness	.73	.79	.79	.85	.85	
	16	Calculated Thickness	.80	.81	.84	.87	.90	
		Use Thickness Class	24	24	25	25	26	
		Use Thickness	.79	.79	.85	.85	.92	
F	2½	Calculated Thickness	.55	.56	.58	.63	.67	
		Use Thickness Class	21	21	21	21	22	
		Use Thickness	.63	.63	.63	.63	.68	
	3½	Calculated Thickness	.54	.56	.58	.62	.66	
		Use Thickness Class	21	21	21	21	22	
		Use Thickness	.63	.63	.63	.63	.68	
	5	Calculated Thickness	.57	.58	.62	.65	.68	
		Use Thickness Class	21	21	21	21	22	
		Use Thickness	.63	.63	.63	.63	.68	
	8	Calculated Thickness	.62	.64	.67	.70	.73	
		Use Thickness Class	21	21	22	22	23	
		Use Thickness	.63	.63	.68	.68	.73	
	12	Calculated Thickness	.67	.69	.72	.75	.78	
		Use Thickness Class	22	22	23	23	24	
		Use Thickness	.68	.68	.73	.73	.79	
	16	Calculated Thickness	.71	.73	.76	.79	.82	
		Use Thickness Class	23	23	24	24	25	
		Use Thickness	.73	.73	.79	.79	.85	

TABLE 1-3

Schedule of Barrel Thickness for Gas Pipe of 18/40 Iron Strength

Laying Condition	Depth of Cover *ft*	Thickness Specifications	Internal Pressure—*psi* 10	50	100	150	200	250
			Barrel Thicknesses—*in.*					
		Four-Inch Gas Pipe						
A	2½	Calculated Thickness	.23	.23	.23	.24	.24	.24
		Use Thickness Class	22	22	22	22	22	22
		Use Thickness	.35	.35	.35	.35	.35	.35
	3½	Calculated Thickness	.22	.23	.23	.23	.23	.23
		Use Thickness Class	22	22	22	22	22	22
		Use Thickness	.35	.35	.35	.35	.35	.35
	5	Calculated Thickness	.23	.23	.24	.24	.24	.25
		Use Thickness Class	22	22	22	22	22	22
		Use Thickness	.35	.35	.35	.35	.35	.35
	8	Calculated Thickness	.25	.25	.25	.26	.26	.27
		Use Thickness Class	22	22	22	22	22	22
		Use Thickness	.35	.35	.35	.35	.35	.35
	12	Calculated Thickness	.27	.28	.28	.2[illegible]	.29	.29
		Use Thickness Class	22	22	22	22	22	22
		Use Thickness	.35	.35	.35	.35	.35	.35
	16	Calculated Thickness	.30	.30	.30	.31	.31	.32
		Use Thickness Class	22	22	22	22	22	22
		Use Thickness	.35	.35	.35	.35	.35	.35
B	2½	Calculated Thickness	.23	.23	.23	.23	.23	.24
		Use Thickness Class	22	22	22	22	22	22
		Use Thickness	.35	.35	.35	.35	.35	.35
	3½	Calculated Thickness	.22	.23	.23	.23	.24	.24
		Use Thickness Class	22	22	22	22	22	22
		Use Thickness	.35	.35	.35	.35	.35	.35
	5	Calculated Thickness	.23	.23	.23	.23	.24	.24
		Use Thickness Class	22	22	22	22	22	22
		Use Thickness	.35	.35	.35	.35	.35	.35
	8	Calculated Thickness	.24	.24	.24	.25	.25	.26
		Use Thickness Class	22	22	22	22	22	22
		Use Thickness	.35	.35	.35	.35	.35	.35
	12	Calculated Thickness	.28	.29	.29	.29	.30	.30
		Use Thickness Class	22	22	22	22	22	22
		Use Thickness	.35	.35	.35	.35	.35	.35
	16	Calculated Thickness	.29	.29	.29	.30	.30	.31
		Use Thickness Class	22	22	22	22	22	22
		Use Thickness	.35	.35	.35	.35	.35	.35
F	2½	Calculated Thickness	.22	.22	.22	.22	.23	.23
		Use Thickness Class	22	22	22	22	22	22
		Use Thickness	.35	.35	.35	.35	.35	.35
	3½	Calculated Thickness	.22	.22	.22	.22	.23	.23
		Use Thickness Class	22	22	22	22	22	22
		Use Thickness	.35	.35	.35	.35	.35	.35
	5	Calculated Thickness	.22	.22	.22	.22	.23	.23
		Use Thickness Class	22	22	22	22	22	22
		Use Thickness	.35	.35	.35	.35	.35	.35
	8	Calculated Thickness	.23	.23	.23	.24	.24	.24
		Use Thickness Class	22	22	22	22	22	22
		Use Thickness	.35	.35	.35	.35	.35	.35
	12	Calculated Thickness	.24	.24	.25	.25	.26	.27
		Use Thickness Class	22	22	22	22	22	22
		Use Thickness	.35	.35	.35	.35	.35	.35
	16	Calculated Thickness	.26	.26	.27	.28	.28	.29
		Use Thickness Class	22	22	22	22	22	22
		Use Thickness	.35	.35	.35	.35	.35	.35

TABLE 1–3 (*Continued*)

Schedule of Barrel Thickness for Gas Pipe of 18/40 Iron Strength

Laying Condition	Depth of Cover *ft*	Thickness Specifications	Internal Pressure—*psi* 10	50	100	150	200	250
			Barrel Thicknesses—*in.*					
		Six-Inch Gas Pipe						
A	2½	Calculated Thickness	.28	.29	.29	.30	.30	.32
		Use Thickness Class	22	22	22	22	22	22
		Use Thickness	.38	.38	.38	.38	.38	.38
	3½	Calculated Thickness	.27	.28	.28	.29	.30	.31
		Use Thickness Class	22	22	22	22	22	22
		Use Thickness	.38	.38	.38	.38	.38	.38
	5	Calculated Thickness	.28	.29	.29	.30	.31	.32
		Use Thickness Class	22	22	22	22	22	22
		Use Thickness	.38	.38	.38	.38	.38	.38
	8	Calculated Thickness	.31	.31	.32	.33	.33	.34
		Use Thickness Class	22	22	22	22	22	22
		Use Thickness	.38	.38	.38	.38	.38	.38
	12	Calculated Thickness	.34	.35	.35	.36	.37	.38
		Use Thickness Class	22	22	22	22	22	22
		Use Thickness	.38	.38	.38	.38	.38	.38
	16	Calculated Thickness	.38	.38	.39	.39	.40	.41
		Use Thickness Class	22	22	22	22	23	23
		Use Thickness	.38	.38	.38	.38	.41	.41
B	2½	Calculated Thickness	.27	.28	.28	.29	.30	.31
		Use Thickness Class	22	22	22	22	22	22
		Use Thickness	.38	.38	.38	.38	.38	.38
	3½	Calculated Thickness	.27	.27	.28	.28	.29	.30
		Use Thickness Class	22	22	22	22	22	22
		Use Thickness	.38	.38	.38	.38	.38	.38
	5	Calculated Thickness	.28	.28	.28	.29	.30	.31
		Use Thickness Class	22	22	22	22	22	22
		Use Thickness	.38	.38	.38	.38	.38	.38
	8	Calculated Thickness	.29	.30	.31	.31	.32	.33
		Use Thickness Class	22	22	22	22	22	22
		Use Thickness	.38	.38	.38	.38	.38	.38
	12	Calculated Thickness	.33	.34	.34	.35	.35	.36
		Use Thickness Class	22	22	22	22	22	22
		Use Thickness	.38	.38	.38	.38	.38	.38
	16	Calculated Thickness	.36	.36	.37	.38	.38	.39
		Use Thickness Class	22	22	22	22	22	22
		Use Thickness	.38	.38	.38	.38	.38	.38
F	2½	Calculated Thickness	.26	.26	.27	.27	.28	.29
		Use Thickness Class	22	22	22	22	22	22
		Use Thickness	.38	.38	.38	.38	.38	.38
	3½	Calculated Thickness	.26	.26	.26	.27	.28	.29
		Use Thickness Class	22	22	22	22	22	22
		Use Thickness	.38	.38	.38	.38	.38	.38
	5	Calculated Thickness	.26	.27	.27	.28	.28	.29
		Use Thickness Class	22	22	22	22	22	22
		Use Thickness	.38	.38	.38	.38	.38	.38
	8	Calculated Thickness	.28	.28	.29	.29	.30	.31
		Use Thickness Class	22	22	22	22	22	22
		Use Thickness	.38	.38	.38	.38	.38	.38
	12	Calculated Thickness	.30	.31	.31	.32	.33	.34
		Use Thickness Class	22	22	22	22	22	22
		Use Thickness	.38	.38	.38	.38	.38	.38
	16	Calculated Thickness	.33	.33	.34	.35	.35	.36
		Use Thickness Class	22	22	22	22	22	22
		Use Thickness	.38	.38	.38	.38	.38	.38

TABLE 1–3 (*Continued*)

Schedule of Barrel Thickness for Gas Pipe of 18/40 Iron Strength

Laying Condition	Depth of Cover *ft*	Thickness Specifications	Internal Pressure—*psi* 10	50	100	150	200	250
			Barrel Thicknesses—*in.*					
		Twenty-Inch Gas Pipe						
A	2½	Calculated Thickness	.61	.62	.65	.67	.70	
		Use Thickness Class	22	22	23	23	24	
		Use Thickness	.62	.62	.67	.67	.72	
	3½	Calculated Thickness	.61	.62	.64	.66	.69	
		Use Thickness Class	22	22	22	23	23	
		Use Thickness	.62	.62	.62	.67	.67	
	5	Calculated Thickness	.63	.65	.67	.69	.72	
		Use Thickness Class	22	23	23	23	24	
		Use Thickness	.62	.67	.67	.67	.72	
	8	Calculated Thickness	.69	.70	.72	.75	.77	
		Use Thickness Class	23	24	24	25	25	
		Use Thickness	.67	.72	.72	.78	.78	
	12	Calculated Thickness	.74	.76	.78	.80	.83	
		Use Thickness Class	24	25	25	25	26	
		Use Thickness	.72	.78	.78	.78	.84	
	16	Calculated Thickness	.79	.80	.82	.84	.87	
		Use Thickness Class	25	25	26	26	26	
		Use Thickness	.78	.78	.84	.84	.84	
B	2½	Calculated Thickness	.56	.57	.59	.62	.65	
		Use Thickness Class	21	21	21	22	23	
		Use Thickness	.57	.57	.57	.62	.67	
	3½	Calculated Thickness	.55	.57	.59	.62	.64	
		Use Thickness Class	21	21	21	22	22	
		Use Thickness	.57	.57	.57	.62	.62	
	5	Calculated Thickness	.58	.59	.61	.64	.67	
		Use Thickness Class	21	21	22	22	23	
		Use Thickness	.57	.57	.62	.62	.67	
	8	Calculated Thickness	.63	.64	.66	.69	.71	
		Use Thickness Class	22	22	23	23	24	
		Use Thickness	.62	.62	.67	.67	.72	
	12	Calculated Thickness	.68	.69	.71	.73	.76	
		Use Thickness Class	23	23	24	24	25	
		Use Thickness	.67	.67	.72	.72	.78	
	16	Calculated Thickness	.71	.73	.75	.77	.80	
		Use Thickness Class	24	24	25	25	25	
		Use Thickness	.72	.72	.78	.78	.78	
F	2½	Calculated Thickness	.50	.51	.53	.57	.60	
		Use Thickness Class	21	21	21	21	22	
		Use Thickness	.57	.57	.57	.57	.62	
	3½	Calculated Thickness	.50	.51	.53	.57	.60	
		Use Thickness Class	21	21	21	21	22	
		Use Thickness	.57	.57	.57	.57	.62	
	5	Calculated Thickness	.52	.54	.56	.58	.62	
		Use Thickness Class	21	21	21	21	22	
		Use Thickness	.57	.57	.57	.57	.62	
	8	Calculated Thickness	.56	.58	.60	.62	.65	
		Use Thickness Class	21	21	22	22	23	
		Use Thickness	.57	.57	.62	.62	.67	
	12	Calculated Thickness	.61	.62	.64	.67	.70	
		Use Thickness Class	22	22	22	23	24	
		Use Thickness	.62	.62	.62	.67	.72	
	16	Calculated Thickness	.64	.66	.68	.70	.72	
		Use Thickness Class	22	23	23	24	24	
		Use Thickness	.62	.67	.67	.72	.72	

TABLE 1-3 (*Continued*)

Schedule of Barrel Thickness for Gas Pipe of 18/40 Iron Strength

Laying Condition	Depth of Cover *ft*	Thickness Specifications	Internal Pressure—*psi* 10	50	100	150	200	250
			Barrel Thicknesses—*in.*					
Sixteen-Inch Gas Pipe								
A	2½	Calculated Thickness	.53	.54	.56	.58	.60	
		Use Thickness Class	22	22	23	23	23	
		Use Thickness	.54	.54	.58	.58	.58	
	3½	Calculated Thickness	.52	.54	.55	.57	.59	
		Use Thickness Class	22	22	22	23	23	
		Use Thickness	.54	.54	.54	.58	.58	
	5	Calculated Thickness	.54	.55	.57	.59	.61	
		Use Thickness Class	22	22	23	23	24	
		Use Thickness	.54	.54	.58	.58	.63	
	8	Calculated Thickness	.60	.61	.63	.65	.67	
		Use Thickness Class	23	24	24	24	25	
		Use Thickness	.58	.63	.63	.63	.68	
	12	Calculated Thickness	.65	.66	.67	.69	.71	
		Use Thickness Class	24	25	25	25	26	
		Use Thickness	.63	.68	.68	.68	.73	
	16	Calculated Thickness	.68	.69	.71	.73	.75	
		Use Thickness Class	25	25	26	26	26	
		Use Thickness	.68	.68	.73	.73	.73	
B	2½	Calculated Thickness	.49	.50	.52	.54	.56	
		Use Thickness Class	21	21	22	22	23	
		Use Thickness	.50	.50	.54	.54	.58	
	3½	Calculated Thickness	.49	.50	.52	.53	.56	
		Use Thickness Class	21	21	22	22	23	
		Use Thickness	.50	.50	.54	.54	.58	
	5	Calculated Thickness	.51	.51	.53	.55	.57	
		Use Thickness Class	21	21	22	22	23	
		Use Thickness	.50	.50	.54	.54	.58	
	8	Calculated Thickness	.55	.56	.58	.60	.62	
		Use Thickness Class	22	23	23	23	24	
		Use Thickness	.54	.58	.58	.58	.63	
	12	Calculated Thickness	.60	.61	.62	.64	.66	
		Use Thickness Class	23	24	24	24	25	
		Use Thickness	.58	.63	.63	.63	.68	
	16	Calculated Thickness	.63	.64	.66	.67	.69	
		Use Thickness Class	24	24	25	25	25	
		Use Thickness	.63	.63	.68	.68	.68	
F	2½	Calculated Thickness	.46	.47	.48	.50	.52	
		Use Thickness Class	21	21	21	21	22	
		Use Thickness	.50	.50	.50	.50	.54	
	3½	Calculated Thickness	.45	.46	.47	.49	.52	
		Use Thickness Class	21	21	21	21	22	
		Use Thickness	.50	.50	.50	.50	.54	
	5	Calculated Thickness	.47	.48	.49	.51	.53	
		Use Thickness Class	21	21	21	21	22	
		Use Thickness	.50	.50	.50	.50	.54	
	8	Calculated Thickness	.51	.52	.53	.55	.57	
		Use Thickness Class	21	22	22	22	23	
		Use Thickness	.50	.54	.54	.54	.58	
	12	Calculated Thickness	.54	.55	.57	.59	.61	
		Use Thickness Class	22	22	23	23	24	
		Use Thickness	.54	.54	.58	.58	.63	
	16	Calculated Thickness	.57	.58	.59	.61	.63	
		Use Thickness Class	23	23	23	24	24	
		Use Thickness	.58	.58	.58	.63	.63	

TABLE 1-3 (*Continued*)

Schedule of Barrel Thickness for Gas Pipe of 18/40 Iron Strength

Laying Condition	Depth of Cover *ft*	Thickness Specifications	Internal Pressure—*psi* 10	50	100	150	200	250
			Barrel Thicknesses—*in.*					
Eight-Inch Gas Pipe								
A	2½	Calculated Thickness	.33	.34	.35	.36	.37	.38
		Use Thickness Class	22	22	22	22	22	22
		Use Thickness	.41	.41	.41	.41	.41	.41
	3½	Calculated Thickness	.32	.33	.34	.34	.35	.36
		Use Thickness Class	22	22	22	22	22	22
		Use Thickness	.41	.41	.41	.41	.41	.41
	5	Calculated Thickness	.33	.34	.35	.36	.37	.38
		Use Thickness Class	22	22	22	22	22	22
		Use Thickness	.41	.41	.41	.41	.41	.41
	8	Calculated Thickness	.36	.37	.37	.38	.39	.40
		Use Thickness Class	22	22	22	22	22	22
		Use Thickness	.41	.41	.41	.41	.41	.41
	12	Calculated Thickness	.41	.42	.42	.43	.44	.45
		Use Thickness Class	22	22	22	23	23	23
		Use Thickness	.41	.41	.41	.44	.44	.44
	16	Calculated Thickness	.44	.45	.45	.46	.47	.48
		Use Thickness Class	23	23	23	24	24	24
		Use Thickness	.44	.44	.44	.48	.48	.48
B	2½	Calculated Thickness	.32	.32	.33	.34	.35	.36
		Use Thickness Class	22	22	22	22	22	22
		Use Thickness	.41	.41	.41	.41	.41	.41
	3½	Calculated Thickness	.31	.32	.33	.33	.34	.36
		Use Thickness Class	22	22	22	22	22	22
		Use Thickness	.41	.41	.41	.41	.41	.41
	5	Calculated Thickness	.32	.33	.34	.34	.35	.37
		Use Thickness Class	22	22	22	22	22	22
		Use Thickness	.41	.41	.41	.41	.41	.41
	8	Calculated Thickness	.35	.35	.36	.37	.38	.39
		Use Thickness Class	22	22	22	22	22	22
		Use Thickness	.41	.41	.41	.41	.41	.41
	12	Calculated Thickness	.39	.39	.40	.41	.42	.43
		Use Thickness Class	22	22	22	22	22	23
		Use Thickness	.41	.41	.41	.41	.41	.44
	16	Calculated Thickness	.42	.42	.43	.44	.45	.46
		Use Thickness Class	22	22	23	23	23	24
		Use Thickness	.41	.41	.44	.44	.44	.48
F	2½	Calculated Thickness	.29	.30	.31	.32	.33	.34
		Use Thickness Class	22	22	22	22	22	22
		Use Thickness	.41	.41	.41	.41	.41	.41
	3½	Calculated Thickness	.29	.29	.30	.30	.31	.33
		Use Thickness Class	22	22	22	22	22	22
		Use Thickness	.41	.41	.41	.41	.41	.41
	5	Calculated Thickness	.29	.30	.31	.32	.33	.34
		Use Thickness Class	22	22	22	22	22	22
		Use Thickness	.41	.41	.41	.41	.41	.41
	8	Calculated Thickness	.32	.33	.33	.34	.35	.36
		Use Thickness Class	22	22	22	22	22	22
		Use Thickness	.41	.41	.41	.41	.41	.41
	12	Calculated Thickness	.35	.36	.37	.37	.38	.39
		Use Thickness Class	22	22	22	22	22	22
		Use Thickness	.41	.41	.41	.41	.41	.41
	16	Calculated Thickness	.38	.38	.39	.40	.41	.42
		Use Thickness Class	22	22	22	22	22	22
		Use Thickness	.41	.41	.41	.41	.41	.41

TABLE 1-3 (*Continued*)

Schedule of Barrel Thickness for Gas Pipe of 18/40 Iron Strength

Laying Condition	Depth of Cover *ft*	Thickness Specifications	Internal Pressure—*psi* 10	50	100	150	200	250
			Barrel Thicknesses—*in.*					
		Ten-Inch Gas Pipe						
A	2½	Calculated Thickness	.39	.40	.41	.42	.43	.45
		Use Thickness Class	22	22	22	22	22	22
		Use Thickness	.44	.44	.44	.44	.44	.44
	3½	Calculated Thickness	.38	.39	.40	.41	.42	.44
		Use Thickness Class	22	22	22	22	22	22
		Use Thickness	.44	.44	.44	.44	.44	.44
	5	Calculated Thickness	.39	.40	.41	.42	.43	.44
		Use Thickness Class	22	22	22	22	22	22
		Use Thickness	.44	.44	.44	.44	.44	.44
	8	Calculated Thickness	.43	.43	.44	.46	.47	.48
		Use Thickness Class	22	22	22	23	23	23
		Use Thickness	.44	.44	.44	.48	.48	.48
	12	Calculated Thickness	.48	.49	.49	.50	.51	.52
		Use Thickness Class	23	23	23	24	24	24
		Use Thickness	.48	.48	.48	.52	.52	.52
	16	Calculated Thickness	.50	.51	.52	.53	.54	.56
		Use Thickness Class	24	24	24	24	25	25
		Use Thickness	.52	.52	.52	.52	.56	.56
B	2½	Calculated Thickness	.37	.38	.39	.40	.41	.43
		Use Thickness Class	22	22	22	22	22	22
		Use Thickness	.44	.44	.44	.44	.44	.44
	3½	Calculated Thickness	.36	.37	.38	.39	.40	.42
		Use Thickness Class	22	22	22	22	22	22
		Use Thickness	.44	.44	.44	.44	.44	.44
	5	Calculated Thickness	.37	.38	.39	.40	.41	.43
		Use Thickness Class	22	22	22	22	22	22
		Use Thickness	.44	.44	.44	.44	.44	.44
	8	Calculated Thickness	.40	.41	.42	.43	.44	.46
		Use Thickness Class	22	22	22	22	22	23
		Use Thickness	.44	.44	.44	.44	.44	.48
	12	Calculated Thickness	.45	.46	.47	.48	.49	.50
		Use Thickness Class	22	23	23	23	23	24
		Use Thickness	.44	.48	.48	.48	.48	.52
	16	Calculated Thickness	.47	.48	.49	.50	.51	.53
		Use Thickness Class	23	23	23	24	24	24
		Use Thickness	.48	.48	.48	.52	.52	.52
F	2½	Calculated Thickness	.34	.35	.36	.37	.38	.40
		Use Thickness Class	22	22	22	22	22	22
		Use Thickness	.44	.44	.44	.44	.44	.44
	3½	Calculated Thickness	.33	.34	.35	.36	.37	.39
		Use Thickness Class	22	22	22	22	22	22
		Use Thickness	.44	.44	.44	.44	.44	.44
	5	Calculated Thickness	.34	.35	.36	.37	.38	.40
		Use Thickness Class	22	22	22	22	22	22
		Use Thickness	.44	.44	.44	.44	.44	.44
	8	Calculated Thickness	.36	.37	.38	.39	.41	.42
		Use Thickness Class	22	22	22	22	22	22
		Use Thickness	.44	.44	.44	.44	.44	.44
	12	Calculated Thickness	.41	.42	.43	.44	.45	.46
		Use Thickness Class	22	22	22	22	22	23
		Use Thickness	.44	.44	.44	.44	.44	.48
	16	Calculated Thickness	.43	.44	.45	.46	.47	.48
		Use Thickness Class	22	22	22	23	23	23
		Use Thickness	.44	.44	.44	.48	.48	.48

TABLE 1-3 (*Continued*)

Schedule of Barrel Thickness for Gas Pipe of 18/40 Iron Strength

Laying Condition	Depth of Cover *ft*	Thickness Specifications	Internal Pressure—*psi* 10	50	100	150	200	250
			Barrel Thicknesses—*in.*					
		Twelve-Inch Gas Pipe						
A	2½	Calculated Thickness	.44	.45	.46	.47	.49	.51
		Use Thickness Class	22	22	22	22	22	23
		Use Thickness	.48	.48	.48	.48	.48	.52
	3½	Calculated Thickness	.43	.43	.45	.46	.48	.50
		Use Thickness Class	22	22	22	22	22	23
		Use Thickness	.48	.48	.48	.48	.48	.52
	5	Calculated Thickness	.44	.45	.46	.47	.48	.50
		Use Thickness Class	22	22	22	22	22	23
		Use Thickness	.48	.48	.48	.48	.48	.52
	8	Calculated Thickness	.48	.49	.50	.52	.53	.55
		Use Thickness Class	22	22	23	23	23	24
		Use Thickness	.48	.48	.52	.52	.52	.56
	12	Calculated Thickness	.53	.54	.55	.57	.58	.59
		Use Thickness Class	23	24	24	24	25	25
		Use Thickness	.52	.56	.56	.56	.60	.60
	16	Calculated Thickness	.56	.56	.58	.59	.60	.62
		Use Thickness Class	24	24	25	25	25	25
		Use Thickness	.56	.56	.60	.60	.60	.60
B	2½	Calculated Thickness	.41	.42	.44	.45	.46	.48
		Use Thickness Class	22	22	22	22	22	22
		Use Thickness	.48	.48	.48	.48	.48	.48
	3½	Calculated Thickness	.40	.41	.42	.44	.45	.47
		Use Thickness Class	22	22	22	22	22	22
		Use Thickness	.48	.48	.48	.48	.48	.48
	5	Calculated Thickness	.41	.42	.43	.45	.46	.48
		Use Thickness Class	22	22	22	22	22	22
		Use Thickness	.48	.48	.48	.48	.48	.48
	8	Calculated Thickness	.45	.46	.47	.49	.50	.52
		Use Thickness Class	22	22	22	22	23	23
		Use Thickness	.48	.48	.48	.48	.52	.52
	12	Calculated Thickness	.50	.51	.52	.53	.55	.56
		Use Thickness Class	23	23	23	23	24	24
		Use Thickness	.52	.52	.52	.52	.56	.56
	16	Calculated Thickness	.52	.53	.54	.56	.57	.59
		Use Thickness Class	23	23	24	24	24	25
		Use Thickness	.52	.52	.56	.56	.56	.60
F	2½	Calculated Thickness	.38	.39	.40	.41	.43	.45
		Use Thickness Class	22	22	22	22	22	22
		Use Thickness	.48	.48	.48	.48	.48	.48
	3½	Calculated Thickness	.37	.38	.39	.40	.42	.44
		Use Thickness Class	22	22	22	22	22	22
		Use Thickness	.48	.48	.48	.48	.48	.48
	5	Calculated Thickness	.38	.39	.40	.41	.43	.45
		Use Thickness Class	22	22	22	22	22	22
		Use Thickness	.48	.48	.48	.48	.48	.48
	8	Calculated Thickness	.41	.42	.43	.45	.46	.48
		Use Thickness Class	22	22	22	22	22	22
		Use Thickness	.48	.48	.48	.48	.48	.48
	12	Calculated Thickness	.45	.46	.47	.48	.50	.52
		Use Thickness Class	22	22	22	22	23	23
		Use Thickness	.48	.48	.48	.48	.52	.52
	16	Calculated Thickness	.47	.48	.49	.50	.52	.53
		Use Thickness Class	22	22	22	23	23	23
		Use Thickness	.48	.48	.48	.52	.52	.52

ASA A21.4
(AWWA C104)

AMERICAN STANDARD FOR CEMENT-MORTAR LINING FOR CAST-IRON PIPE AND FITTINGS FOR WATER

ASA A21.4

4–14.4.2. When the 6-in. cut section is used, it shall be bedded on end in a shallow pan of molten paraffin. After the paraffin has cooled, the 6-in. cut section shall be filled nearly to the top with distilled or demineralized water at laboratory temperature. The top shall be covered with a glass plate and sealed with petroleum jelly.

4–14.4.3. If an isolated section is used, it shall be filled through a tap in the closure device with distilled or demineralized water at laboratory temperature.

4–14.4.4. In either case, the water in the specimen shall be changed and tested, after 24-hr contact, on each of three successive days.

4–14.4.5. The method and procedures used in the determination of hardness and alkalinity shall be those prescribed in the 11th edition of *Standard Methods.**

Sec. 4–15—Summary of Test Requirements

4–15.1. *Cement.* The cement manufacturer shall submit analyses and physical test records of each shipment of cement. These records shall be kept for reference for 1 year. (See Sec. 4–2.)

4–15.2. *Sand.* Tests of sand (see Sec. 4–3) shall be made as follows:

4–15.2.1. One sieve analysis shall be performed on each carload of sand delivered. For sand delivered by other means, one sieve analysis shall be made for each 50 tons.

4–15.2.2. The colorimetric and decantation tests of sand from an established source of supply shall be made once each 6 months. For sand from a new source, these tests shall be made not less than once a month for a period of 6 months.

4–15.2.3. The requirements of Sec. 4–15.2.1 and 4–15.2.2 shall be met and the records shall be filed for reference for 1 year.

4–15.3. *Determination of lining thickness.* Lining thickness shall be determined at intervals frequent enough to assure compliance. (See Sec. 4–11.)

4–15.4. *Seal coat.* Leaching tests shall be made at sufficiently frequent intervals to assure compliance. The results of one test each month shall be filed for reference for 1 year. (See Sec. 4–14.)

* *Standard Methods for the Examination of Water and Wastewater.* APHA, AWWA & WPCF, New York (11th ed., 1960).

NOTE

This note is not a part of ASA A21.4 (AWWA C104) but is given for information only.

The purchaser of cement-mortar-lined pipe or fittings for use with a water that is corrosive to calcium carbonate, such as a very soft water, is advised, before omitting the seal coat, to satisfy himself by appropriate test that such a lining will not impart objectionable hardness or alkalinity to the water. The procedure outlined in Sec. 4–14.4, modified by the substitution of the water with which the pipe is to be used for distilled water, is suggested as a convenient form of test.

3P—17M—12/65

UDC 621.774.1:666.97.03

ASA A21.4–1964 (AWWA C104–64)

Revision of A21.4–1953 (AWWA C104–53)

AMERICAN STANDARD

for

CEMENT-MORTAR LINING FOR CAST-IRON PIPE AND FITTINGS FOR WATER

PUBLISHED BY AMERICAN WATER WORKS ASSOCIATION, INC.

SPONSORS

American Gas Association

American Society for Testing and Materials

American Water Works Association

New England Water Works Association

First Edition: A21.4–1939; Second Edition: A21.4–1953; Third Edition: A21.4–1964

Approved by American Standards Association Jun. 9, 1964

AMERICAN WATER WORKS ASSOCIATION
Incorporated
2 Park Avenue, New York, N.Y. 10016

© Copyright 1964 by the American Water Works Association, Inc.
Made in USA

as determined in Sec. 4–11, shall be not less than $\frac{1}{16}$ in. for 3–12 in. pipe, $\frac{3}{32}$ in. for 14–24 in. pipe, and $\frac{1}{8}$ in. for 30–48 in. pipe.

4–10.2 *Other thicknesses of linings.* Linings with thicknesses twice those specified in Sec. 4–10.1 shall be furnished if specified by the purchaser.

4–10.3 *Taper of linings.* Linings may taper at the ends. The length of the taper shall be as short as practicable and shall not exceed 2 in.

4–10.4. *Permitted tolerances.* A thickness tolerance of $+\frac{1}{8}$ in. shall be permitted on pipe and $+\frac{1}{4}$ in. on fittings.

Sec. 4–11—Determination of Thickness

Thickness of lining may be determined by means of spear measurement, using a hardened-steel point not larger than $\frac{1}{16}$ in. in diameter, or by another approved gage. If spear measurement is used, the inspector shall pierce the lining immediately after it is placed in the pipe or fitting and before the mortar has set. The lining shall be pierced at four equidistant points on two cross sections of the barrel at each end of the pipe or fitting. The first set shall not be more than 4 in. from the respective ends of the pipe or fitting. The second set shall be made as far into the interior of the pipe or fitting as can be readily reached without injuring the lining.

Sec. 4–12—Curing

The lining shall be cured in such a manner as to produce a properly hydrated mortar lining that is hard and durable and will otherwise meet the requirements of Sec. 4–13. The cure may be effected by the application of a seal coat to the still-moist lining.

Sec. 4–13—Finished Lining

4–13.1. *Lining.* The lining shall have a substantially smooth surface and be free from harmful ridges, corrugations, elevations, and depressions.

4–13.2. *Imperfections in linings.* The lining shall not show any loose spots measuring 12 in. or more in the greatest dimension, nor cracks longer than 9 in., nor a crack of any length that is standing open perceptibly. Surface crazing shall be permitted.

Sec. 4–14—Seal Coat

4–14.1. *General.* Unless otherwise specified, the cement lining shall be given a seal coat of bituminous material. Other seal coat materials may be used, but they shall be agreed upon at the time of purchase and shall be specified on the purchase order.*

4–14.2. *Seal coat characteristics.* The seal coat shall be continuous and shall adhere to the mortar lining at all points. The seal coat, after drying for at least 48 hr, shall have no deleterious effect upon the quality, color, taste, or odor of potable water that has been left standing in the pipe for 48 hr. The color, taste, and odor test shall be performed on a specimen as described in Sec. 4–14.4.1.

4–14.3. *Leaching resistance.* The seal-coated pipe, when tested in accordance with the methods outlined in Sec. 4–14.4, shall impart to the water, during any 24-hr test period, no more than 25 ppm of hardness or 25 ppm of total alkalinity, and it shall impart no caustic alkalinity.

4–14.4. *Method of testing.* The seal-coated pipe shall be tested as follows:

4–14.4.1. The test specimen shall be a 6-in. length, either cut or isolated by suitable closure pieces, from 6- or 8-in. pipe.

* See "Note," p. 4.

centage finer than No. 200 mesh sieve, as defined in ASTM Designation C117, is equal to the AFS percentage of clay plus the percentage passing through the No. 200 sieve.

4–3.2.3. *Sampling.* Sections 14 and 15 of ASTM D75, "Standard Methods of Sampling Stone, Slag, Gravel, Sand and Stone Block for Use as Highway Materials."

4–3.3. *Acceptance specifications.* Under the colorimetric test for organic impurities, the sand shall not produce a color darker than the standard. The sand shall be acceptable, however, if it is shown by adequate test that the impurities causing the color are not harmful to the strength or other specified properties of the finished lining. No more than 2 per cent of the sand shall be lost in the decantation test.

Sec. 4–4—Water

The water used for tempering the mortar shall be free from harmful amounts of oil, acid, alkali, organic matter, and other deleterious substances.

Sec. 4–5—Mortar

Mortar for the lining shall be composed of cement, sand, and water. It shall be well mixed and of proper consistency to produce a dense, homogeneous lining that will adhere firmly to the pipe surface. Admixtures may be used, provided the linings meet all the requirements of this standard. The cement mortar shall contain not less than one part of cement to two parts of dry sand, by volume.

Sec. 4–6—Preparation of Pipe and Fittings for Lining

The surface to be lined shall be free from harmful amounts of foreign material. Furthermore, the surface shall be free from projections of iron that would substantially reduce the thickness of the lining.

Sec. 4–7—Method of Lining

4–7.1. *Lining of pipe and fittings.* Pipe shall be lined by the centrifugal process. Fittings shall be lined by a process that will produce linings equal, as nearly as practicable, to the linings of the straight pipe.

4–7.2. *Mortar.* The waterway surfaces of pipe and fittings shall be completely covered with, as nearly as practicable, a uniform thickness of the specified mortar. The mortar shall be entirely free from holidays or visible bubbles of air and shall be thoroughly compacted throughout. The consistency of the mortar and the time and speed of spinning shall be so adjusted as to minimize the segregation of the sand from the cement and to deliver the finished lining substantially free of laitance.

4–7.3. *Defective linings.* Small damaged areas of linings may be patched by cutting out to the metal and thoroughly wetting the area and the adjoining lining before applying a stiff mortar. The patched area shall be cured as specified in Sec. 4–12.

Sec. 4–8—Socket

The socket shall be free of mortar.

Sec. 4–9—Protection of Work

The work of lining the pipe and fittings shall be done in a building where the product shall be protected from the direct rays of the sun and from extreme weather conditions, such as frost and rain.

Sec. 4–10—Thickness of Lining

4–10.1. *Standard thickness.* The thickness of linings for pipe and fittings,

American Standard

An American Standard implies a consensus of those substantially concerned with its scope and provisions. The consensus principle extends to the initiation of work under the procedure of the American Standards Association, to the method of work to be followed, and the final approval of the standard.

An American Standard is intended as a guide to aid the manufacturer, the consumer, and the general public. The existence of an American Standard does not in any respect preclude any party who has approved of the standard from manufacturing, selling, or using products, processes, or procedures not conforming to the standard.

An American Standard defines a product, process, or procedure with reference to one or more of the following: nomenclature, composition, construction, dimensions, tolerances, safety, operating characteristics, performance, quality, rating, certification, testing, and the service for which designed.

American Standards are subject to periodic review. They are reaffirmed or revised to meet changing economic conditions and technologic progress. Users of American Standards are cautioned to secure the latest editions.

Producers of goods made in conformity with an American Standard are encouraged to state on their own responsibility in advertising, promotion materials, or on tags or labels, that the goods are produced in conformity with particular American Standards. The inclusion in such advertising and promotion media, or on tags or labels, of information concerning the characteristics covered by the standard to define its scope is also encouraged.

Table of Contents

	SECTION		SECTION
Scope	4–1	Socket	4–8
Cement	4–2	Protection of Work	4–9
Sand	4–3	Thickness of Lining	4–10
Water	4–4	Determination of Thickness	4–11
Mortar	4–5	Curing	4–12
Preparation of Pipe and Fittings for Lining	4–6	Finished Lining	4–13
Method of Lining	4–7	Seal Coat	4–14
		Summary of Test Requirements	4–15

Note ..... *following* Sec. 4–15

UDC 621.774.1

ASA A21.4–1964 (AWWA C104–64)

Revision of A21.4–1953 (AWWA C104–53)

American Standard for

Cement-Mortar Lining for Cast-Iron Pipe and Fittings for Water

Sec. 4–1—Scope

This standard covers cement-mortar linings specified in the A21 series of American Standards for pipe and fittings for water and is intended for use as a supplement to those standards.

Sec. 4–2—Cement

The cement shall meet the requirements of "Standard Specifications for Type I or Type II Portland Cement," ASTM Designation C150. The type of cement selected shall be left to the option of the pipe and fittings manufacturer.

Sec. 4–3—Sand

4–3.1. *Type of sand.* The sand shall consist of inert granular material having hard, strong, durable, uncoated grains.

The sand shall be well graded, from fine to coarse. As nearly as practicable, it shall produce a lining of maximum density and minimum water absorption. These properties of the lining shall be consistent with both the proportion of cement and the lining methods used, and with workability of the mortar and the other specified properties of the lining.

In addition, the sand, when tested with standard sieves, shall meet the requirements listed in Table 1.

4–3.2. *Testing of sand.* The specified tests of sand shall be made in accordance with the standard methods of ASTM, as follows:

4–3.2.1. *Colorimetric test.* ASTM C40—Standard Method of Test for Organic Impurities in Sands for Concrete.

4–3.2.2. *Decantation test.* ASTM C117—Standard Method of Test for Material Finer than No. 200 Sieve in Mineral Aggregates by Washing.

At the option of the manufacturer, the clay content and sand grain fineness may be determined by using the American Foundrymen's Society procedure, described in the *Foundry Sand Handbook,* sixth edition, pp. 35–43. By this latter method, the total per-

TABLE 1

Requirements for Sand Tested With Standard Sieves

Min. Thickness of Lining *in.*	Sieve Requirement *	
	100 Per Cent of Sand Shall Pass (Sieve No.)	75 Per Cent of Sand Shall Pass (Sieve No.)
$\frac{1}{16}$	12	20
$\frac{3}{32}$	12	16
$\frac{1}{8}$	12	†
$\frac{3}{16}$	8	†
$\frac{1}{4}$	6	†

* Not more than 10 per cent, by weight, of any sand shall pass through sieve No. 100.
† Not applicable.

Foreword

This foreword is not a part of ASA A21.4 (AWWA C104), but is given for information only.

The first recorded installation of cement-mortar linings in cast-iron pipe was in 1922 at Charleston, S.C., under the supervision of J. E. Gibson.

From 1922 to 1929, many installations were made under various manufacturers' specifications. In 1929, ASA Sectional Committee A21 issued a tentative standard for cement-mortar linings. This was published as a tentative standard by AWWA in 1932. After many revisions and refinements, it was finally adopted by ASA in 1939 under the designation A21.4—Specifications for Cement-Mortar Lining for Cast-Iron Pipe and Fittings. This document specified the cement to be used only as portland cement, ASTM Designation C9. The proportions specified were one part cement to one part sand, by volume, and the only curing method permitted was moist curing for a minimum of 42 hr.

During the period 1940–52, much research was done on various types of cement, methods of manufacture, and methods of curing cement mortar to improve the quality of cement-mortar linings. As a result of this research, a revised edition of the 1939 standard was approved and issued in 1953. Prior to the 1953 revision, the portland cement used for lining water pipe was equivalent to ASTM Type I cement (C9). The 1953 revision of A21.4 substituted Type II cement for the Type I because some members of Committee A21 felt that Type II cement was a more closely controlled product than Type I. The centrifuged process for lining was further developed during the 1940–52 period to provide the controls and techniques necessary for assurance of uniformity of thickness throughout the length of a pipe. Another major revision recognized the ability of cure-assist bituminous materials to provide controlled curing of the mortar. The use of this method was permitted as a substitute for the moist-curing process. Finally, cement-sand mixtures containing one part cement and up to two parts of sand, by volume, were determined to be satisfactory and were permitted.

In 1958, Sectional Committee A21 was reorganized and subcommittees were established to study each group of standards in accordance with ASA's review and revision policy.

Subcommittee 4 (Coatings and Linings for Cast-Iron Pipe) was organized to examine the existing ASA A21.4–1953, "Standard for Cement-Mortar Lining for Cast-Iron Pipe and Fittings," and to draft a standard for the coating of cast-iron pipe and fittings. This subcommittee completed its study of A21.4–53 and submitted a proposed revision to Sectional Committee A21 in 1963.

Major Revisions

The major revisions to the standard, incorporated in this edition, are:

Scope. The cement linings are specified for use in water lines only. This qualification is made so as to avoid the use of cement-mortar linings in pipe carrying aggressive liquids which would react with the lining to produce undesirable results.

Cement. This 1964 revision of the standard permits the use of cement which meets the requirements of either Type I or Type II portland cement

(ASTM C150), at the manufacturer's option, whereas the 1953 standard permitted only the use of cement that met the requirements of Type II portland cement. The decision to permit the use of cement meeting the requirements of either Type I or Type II portland cement was based on:

1. Examination of cement-mortar linings made with a general-purpose portland cement equivalent to ASTM Type I, which showed these linings to have an excellent record in maintaining high-flow coefficients after more than 30 years in service carrying various types of water

2. Extensive laboratory studies comparing the leaching resistance of cements meeting the requirements of both Type I and Type II portland cement. These tests have shown that the rate of leaching was the same for both types, thus establishing that either type can produce cement-mortar linings having equal durability for water pipe.

Sand. The sieve requirements have been made more exacting so as to insure a more consistent and suitable sand for the linings.

A hydrochloric acid test requirement is no longer included in the standard because sand used in linings for water pipe need not be stable under abnormal acid conditions.

Mortar. The provision for use of other hydraulic cements has been eliminated because cements that meet the requirements of Type I and Type II portland cement have been found most satisfactory for use in water lines.

Thickness of lining. The 1964 standard reduces the minimum permissible thickness of the lining. This reduction is based on more than 20 years of Cast Iron Pipe Research Association (CIPRA) studies of experimental test lines having cement-mortar linings varying from $\frac{1}{32}$ in. to $\frac{1}{4}$ in. in thickness, on field tests of linings of these thicknesses that have been in service for more than 30 years, and on the assurance of uniformity of thickness afforded by improvements in the centrifugal lining process.

Two thicknesses of lining are available, and purchasers who require a lining thickness twice the standard thickness have the option of so specifying. The use of the thinner linings has steadily increased and they are now furnished on at least 75 per cent of the pipe sold.

The finished lining. The density of the cement-mortar linings has been assured by limiting lining application to the centrifugal process, thereby making the inclusion of a water absorption test unnecessary.

Seal coat. As seal coats other than bituminous ones have been developed, this standard makes provision for use of the newer seal coats.

Outside coating. Reference to an outside coating has been deleted from this standard, because the requirements of such a coating are included in the various pipe and fittings standards.

Options

This standard includes certain options, which, if desired, *must* be specified. These are:

1. Thickness of Lining (Sec. 4–10)
2. Seal Coat (Sec. 4–14).

Committee Personnel

Subcommittee No. 4, which reviewed A21.4–1953 and developed this revision, had the following personnel at that time:

KENNETH W. HENDERSON, *Chairman*
THOMAS F. WOLFE, *Vice-Chairman*

User Members	*Producer Members*
CHARLES W. BEGGS	WALLACE E. BOSWELL
LESLIE R. CONLEY	ARTHUR ROBERTS JR.
PETER E. PALLO	ERNEST F. WAGNER
EVERETT C. ROWLEY	CLYDE D. WOOD

Sectional Committee A21, which reviewed and approved this standard had the following personnel at the time of approval:

EDWIN B. COBB, *Chairman*
HERBERT W. STUART, *Vice-Chairman*
JAMES B. RAMSEY, *Secretary*

Organizations Represented	*Representatives*
American Gas Association	RICHMOND C. HOLCOMBE
American Society of Civil Engineers	KENNETH W. HENDERSON
American Society of Mechanical Engineers	LOUIS R. HOWSON
American Society for Testing and Materials	HARRY P. HAGEDORN
American Water Works Association	S. LOGAN KERR
Cast Iron Pipe Research Association	WALLACE T. MILLER HERBERT W. STUART J. THOMPSON VANN
Manufacturers' Standardization Society of the Valve and Fittings Industry	GEORGE A. MACDONALD
New England Water Works Association	EDWIN B. COBB
Standardization Division, General Services Administration	
Member at Large	ROLF H. JENSEN

ASA A21.6
(AWWA C106)

AMERICAN STANDARD FOR CAST-IRON PIPE CENTRIFUGALLY CAST IN METAL MOLDS, FOR WATER OR OTHER LIQUIDS

ASA A21.6

UDC 621.774.1

ASA A21.6–1962
(AWWA C106–62)
Revision of
A21.6–1953
(AWWA C106–53)

AMERICAN STANDARD

for

CAST-IRON PIPE CENTRIFUGALLY CAST IN METAL MOLDS, FOR WATER OR OTHER LIQUIDS

PUBLISHED BY AMERICAN WATER WORKS ASSOCIATION, INC.

SPONSORS

American Gas Association
American Society for Testing and Materials
American Water Works Association
New England Water Works Association

Revised Edition Approved by American Standards Association Feb. 26, 1962

Distributed by

AMERICAN WATER WORKS ASSOCIATION
Incorporated
2 Park Avenue, New York, N.Y. 10016

4P—17M—12/65

Table of Contents

Standard—pp. 1–5

	SEC.		SEC.
Scope	6–1	Weighing	6–11
Definitions	6–2	Acceptance Tests	6–12
General Requirements	6–3	Ring Tests and Full-Length Bursting Tests	6–13
Inspection and Certification by Manufacturer	6–4	Chemical Analyses	6–14
Inspection by Purchaser	6–5	Foundry Records	6–15
Delivery and Acceptance	6–6	Additional Tests Required by Purchaser	6–16
Tolerances or Permitted Variations	6–7	Defective Specimens and Retests	6–17
Coatings and Linings	6–8	Rejection of Pipe	6–18
Hydrostatic Test	6–9	Determining Rejection	6–19
Marking Pipe	6–10		

Appendix—pp. 6–8

	SEC.		SEC.
Talbot Strip Tests	6–A1	Full-Length Bursting Tests	6–A3
Ring Tests	6–A2		

Tables—pp. 9–21

Table 6.1—Standard Bell-and-Spigot Joint Dimensions for Pipe Centrifugally Cast in Metal Molds

Table 6.2—Standard Thickness Classes, Thicknesses, Diameters, and Weights of Bell-and-Spigot Pipe Centrifugally Cast in Metal Molds

Table 6.3—Standard Thicknesses, Diameters, and Weights of Bell-and-Spigot Pipe Centrifugally Cast in Metal Molds

Table 6.4—Standard Thicknesses of Pipe Centrifugally Cast in Metal Molds

Table 6.5—Standard Mechanical-Joint Dimensions for Pipe Centrifugally Cast in Metal Molds

Table 6.6—Standard Thickness Classes, Thicknesses, Diameters, and Weights of Mechanical-Joint Pipe Centrifugally Cast in Metal Molds

Table 6.7—Standard Thicknesses, Diameters, and Weights of Mechanical-Joint Pipe Centrifugally Cast in Metal Molds

Users of this document should refer to ASA A21.1 (AWWA C101) for complete information concerning the conditions that various thicknesses of pipe are designed to meet.

© Copyright 1962 by the American Water Works Assn.
as part of the March 1962 Journal AWWA
Made in USA

TABLE 6.7—(*contd.*)

Standard Thicknesses, Diameters and Weights of Mechanical-Joint Pipe Centrifugally Cast in Metal Molds

These thicknesses and weights are for pipe laid without blocks, on flat-bottom trench, with tamped backfill (laying condition B), under 5 ft of cover. For other conditions see Table 6.4 and 6.6 hereof and ASA A21.1 (AWWA C101).

Size	Thickness	OD	Weight Based on 18-ft Laying Length		Weight Based on 20-ft Laying Length	
			Per Length†	Avg. per Foot‡	Per Length†	Avg. per Foot‡
in.			*lb*			
Working Pressure 250 psi—577 ft Head						
3*	0.32	3.96	215	12.0	240	11.9
4	0.35	4.80	290	16.2	320	16.1
6	0.38	6.90	460	25.5	510	25.4
8	0.41	9.05	655	36.4	725	36.2
10	0.44	11.10	870	48.2	960	48.0
12	0.52	13.20	1,215	67.4	1,340	67.1
14	0.59	15.30	1,610	89.4		
16	0.63	17.40	1,960	108.9		
18	0.68	19.50	2,370	131.7		
20	0.72	21.60	2,785	154.8		
24	0.79	25.80	3,665	203.5		
Working Pressure 300 psi—693 ft Head						
3*	0.32	3.96	215	12.0	240	11.9
4	0.35	4.80	290	16.2	320	16.1
6	0.38	6.90	460	25.5	510	25.4
8	0.41	9.05	655	36.4	725	36.2
10	0.48	11.10	940	52.2	1,040	52.0
12	0.52	13.20	1,215	67.4	1,340	67.1
14	0.59	15.30	1,610	89.4		
16	0.68	17.40	2,100	116.7		
18	0.73	19.50	2,530	140.6		
20	0.78	21.60	3,000	166.6		
24	0.85	25.80	3,920	217.7		
Working Pressure 350 psi—808 ft Head						
3*	0.32	3.96	215	12.0	240	11.9
4	0.35	4.80	290	16.2	320	16.1
6	0.38	6.90	460	25.5	510	25.4
8	0.41	9.05	655	36.4	725	36.2
10	0.52	11.10	1,010	56.1	1,120	55.9
12	0.56	13.20	1,300	72.2	1,440	71.9
14	0.64	15.30	1,735	96.3		
16	0.68	17.40	2,100	116.7		
18	0.79	19.50	2,720	151.2		
20	0.84	21.60	3,210	178.3		
24	0.92	25.80	4,215	234.2		

* Pipe of 3-in. size also available in 12-ft laying length. Weight per length† is 150 lb; average weight per foot‡ is 12.3 lb for all working pressures and heads.
†Including bell. Calculated weight of pipe rounded off to nearest 5 lb.
‡ Including bell. Average weight per foot based on calculated weight of pipe before rounding.

TABLE 6.7

Standard Thicknesses, Diameters, and Weights of Mechanical-Joint Pipe Centrifugally Cast in Metal Molds

These thicknesses and weights are for pipe laid without blocks, on flat-bottom trench, with tamped backfill (laying condition B), under 5 ft of cover. For other conditions see Tables 6.4 and 6.6 hereof and ASA A21.1 (AWWA C101).

Size	Thickness	OD	Weight Based on 18-ft Laying Length		Weight Based on 20-ft Laying Length	
			Per Length†	Avg. per Foot‡	Per Length†	Avg. per Foot‡
in.			*lb*			
Working Pressure 50 psi—115 ft Head						
3*	0.32	3.96	215	12.0	240	11.9
4	0.35	4.80	290	16.2	320	16.1
6	0.38	6.90	460	25.5	510	25.4
8	0.41	9.05	655	36.4	725	36.2
10	0.44	11.10	870	48.2	960	48.0
12	0.48	13.20	1,125	62.6	1,245	62.3
14	0.48	15.30	1,335	74.0		
16	0.54	17.40	1,700	94.5		
18	0.54	19.50	1,920	106.7		
20	0.57	21.60	2,250	124.9		
24	0.63	25.80	2,975	165.2		
Working Pressure 100 psi—231 ft Head						
3*	0.32	3.96	215	12.0	240	11.9
4	0.35	4.80	290	16.2	320	16.1
6	0.38	6.90	460	25.5	510	25.4
8	0.41	9.05	655	36.4	725	36.2
10	0.44	11.10	870	48.2	960	48.0
12	0.48	13.20	1,125	62.6	1,245	62.3
14	0.51	15.30	1,410	78.2		
16	0.54	17.40	1,700	94.5		
18	0.58	19.50	2,050	113.9		
20	0.62	21.60	2,430	134.9		
24	0.68	25.80	3,190	177.2		
Working Pressure 150 psi—346 ft Head						
3*	0.32	3.96	215	12.0	240	11.9
4	0.35	4.80	290	16.2	320	16.1
6	0.38	6.90	460	25.5	510	25.4
8	0.41	9.05	655	36.4	725	36.2
10	0.44	11.10	870	48.2	960	48.0
12	0.48	13.20	1,125	62.6	1,245	62.3
14	0.51	15.30	1,410	78.2		
16	0.54	17.40	1,700	94.5		
18	0.58	19.50	2,050	113.9		
20	0.62	21.60	2,430	134.9		
24	0.73	25.80	3,405	189.2		
Working Pressure 200 psi—462 ft Head						
3*	0.32	3.96	215	12.0	240	11.9
4	0.35	4.80	290	16.2	320	16.1
6	0.38	6.90	460	25.5	510	25.4
8	0.41	9.05	655	36.4	725	36.2
10	0.44	11.10	870	48.2	960	48.0
12	0.48	13.20	1,125	62.6	1,245	62.3
14	0.55	15.30	1,510	83.8		
16	0.58	17.40	1,815	100.9		
18	0.63	19.50	2,210	122.8		
20	0.67	21.60	2,610	144.9		
24	0.79	25.80	3,665	203.5		

* Pipe of 3-in. size also available in 12-ft laying length. Weight per length† is 150 lb; average weight per foot‡ is 12.3 lb for all working pressures and heads.
† Including bell. Calculated weight of pipe rounded off to nearest 5 lb.
‡ Including bell. Average weight per foot based on calculated weight of pipe before rounding.

Foreword

This foreword is not a part of ASA A21.6 (AWWA C106)

On Sep. 10, 1902, NEWWA adopted a "Standard Specification for Cast-Iron Pipe and Special Castings." This covered bell-and-spigot pit-cast pipe and fittings of ten thickness classes with the class thicknesses based on allowable heads varying by 50 ft.

On May 12, 1908, AWWA adopted a "Standard Specification for Cast-Iron Pipe and Special Castings." This covered bell-and-spigot pit-cast pipe and fittings of eight classes, A–H, with allowable working pressures varying by 100-ft head increments; Class A for 100-ft head to Class H for 800-ft head. Dimensions and weights were given for pipe and fittings.

In 1926, the ASA A21 Sectional Committee on Cast Iron Pipe and Fittings was organized. The sponsor societies were the American Gas Association, the American Society for Testing and Materials, the American Water Works Association, and the New England Water Works Association. Committee A21 was assigned the following scope:

Unification of specifications for cast-iron pipe, including materials; dimensions; pressure ratings; methods of manufacture (including such new developments as centrifugal casting) insofar as they may be necessary to secure satisfactory specifications; elimination of unnecessary sizes and varieties; consideration of the possibility of developing a coordinated scheme of metallic pipe and fittings applicable to all common mediums; and methods of making up joints insofar as they are determining as to the dimensional design of cast-iron pipe.

The types of cast-iron pipe [are] to include bell-and-spigot pipe, flanged pipe, flanged and bell mouth fittings and wall castings, pipe elbows, tees, Y's, return bends, and other fittings not now included in standard lists; cast-iron pipe threaded for flanges or couplings. The standardization is not to include methods of installing pipe and similar matters, except as to the making up of joints in its relationship to the dimensional standardization of pipe and fittings, as noted above.

The sectional committee made many tests of pipe and fittings; these included tests of pipe under combined earth load and internal pressures on which the design of pipe thicknesses is based, corrosion tests, hydraulic friction loss in fittings, and bursting tests of pipe and fittings. After exhaustive study of the test results and other research work, the committee in 1939 issued the A21.1 "American Standard Practice Manual for the Computation of Strength and Thickness of Cast Iron Pipe." This design method is applicable to pipe of any strength iron, although the pipe specifications are written for 11/31-strength iron for pit-cast pipe and 18/40-strength iron for centrifugally cast pipe.

Discussions and interpretations * † of the ASA method of design of cast-iron

* Wiggin, T. H.; Enger, M. L.; & Schlick, W. J. A Proposed New Method for Determining Barrel Thicknesses of Cast-Iron Pipe. *Jour. AWWA*, 31:841 (May 1939).

† Moore, W. D. Discussion of the New Law of Design of Cast-Iron Pipe. *Jour AWWA*, 31:1655 (Oct. 1939).

pipe were published in 1939 and presented to AWWA and the American Gas Association. As a result of these publications and general acceptance of the A21.1 manual, a substantial volume of cast-iron pipe was designed by the new method and furnished to manufacturers' standards between 1939 and 1953. Work on standards for centrifugally cast pipe was started after the design was finalized in 1939, but with the advent of war and other causes they were not formally issued until 1953.

In 1958 the A21 sectional committee was reorganized. Subcommittees were established to study each group of standards in accordance with the review and revision policy of ASA.

Subcommittee No. 1 on pipe specifications was organized with the following scope:

> The scope of the committee activity shall include an examination of all present A21 standards for pipe to determine what is needed to bring these up to date. The examination shall include A21.1, A21.2, A21.3, A21.6, A21.7, A21.8, and A21.9, as well as any other matters pertaining to pipe standards.

This subcommittee completed its study of A21.6–1953 and submitted a proposed revision to the A21 sectional committee in 1960.

Major Revisions

The major revisions to the standard are:

Scope. Pipe with mechanical joints are added, as this joint is widely used for water service. Push-on joints are now widely used for water service and are made to manufacturers' standards. Push-on-joint pipe all have the standard spigot diameters, and the weights of the bell and spigot pipe are applicable.

Pipe shorter than nominal lengths. Ten per cent of the pipe on an order is allowed to be 24 in. less than the nominal laying length, as in the previous standard. An additional 10 per cent is allowed to be 3 in. less than the nominal laying length.

Weight. No major change is made in weight requirements except to tighten the standard somewhat by requiring the 2 per cent underweight limit to apply not only to any order of 25 tons or more, but also to any one size of 25 tons or more included on any order.

Coating and lining. A minimum of 1-mil thickness of either coal tar or asphalt-base bituminous coating is required for either the inside or outside of coated pipe. Cement lining is recommended in accordance with ASA A21.4 (AWWA C104) for all pipe. The previous standard had no requirement for coatings, merely stating it shall be specified at the time of purchase.

Hydrostatic test. A 500-psi hydrostatic test is required for all pipe. Also, the full test pressure must be on the pipe for 10-sec. Suitable control and recording devices must be provided to insure compliance with these requirements. The previous standard permitted a 400-psi test for 14–24-in. pipe of Class 23 and thinner wall thicknesses.

After considerable study, the committee agreed that the requirement of the previous standard for 30 sec under the test pressure was not necessary and that 10 sec is adequate.

Physical test requirements. The only change is to require bursting tests and ring tests from specified grouping of pipe sizes each month.

Appendix. The only change is to delete the formula for calculating the

TABLE 6.6—(*contd.*)

Standard Thickness Classes, Thicknesses, Diameters, and Weights of Mechanical-Joint Pipe Centrifugally Cast in Metal Molds

Size *in.*	Thickness Class†	Thickness	OD	ID	Weight of Barrel per Foot	Weight of Bell	Weight Based on 18-ft Laying Length		Weight Based on 20-ft Laying Length	
							Per Length‡	Avg. per Foot§	Per Length‡	Avg. per Foot§
		in.			*lb*					
14	21	0.48	15.30	14.34	69.7	78	1,335	74.0		
	22	0.51	15.30	14.28	73.9	78	1,410	78.2		
	23	0.55	15.30	14.20	79.5	78	1,510	83.8		
	24	0.59	15.30	14.12	85.1	78	1,610	89.4		
	25	0.64	15.30	14.02	92.0	78	1,735	96.3		
	26	0.69	15.30	13.92	98.8	78	1,855	103.1		
	27	0.75	15.30	13.80	107.0	78	2,005	111.3		
	28	0.81	15.30	13.68	115.0	78	2,150	119.3		
16	21	0.50	17.40	16.40	82.8	95	1,585	88.1		
	22	0.54	17.40	16.32	89.2	95	1,700	94.5		
	23	0.58	17.40	16.24	95.6	95	1,815	100.9		
	24	0.63	17.40	16.14	103.6	95	1,960	108.9		
	25	0.68	17.40	16.04	111.4	95	2,100	116.7		
	26	0.73	17.40	15.94	119.3	95	2,240	124.6		
	27	0.79	17.40	15.82	128.6	95	2,410	133.9		
	28	0.85	17.40	15.70	137.9	95	2,575	143.2		
18	21	0.54	19.50	18.42	100.4	113	1,920	106.7		
	22	0.58	19.50	18.34	107.6	113	2,050	113.9		
	23	0.63	19.50	18.24	116.5	113	2,210	122.8		
	24	0.68	19.50	18.14	125.4	113	2,370	131.7		
	25	0.73	19.50	18.04	134.3	113	2,530	140.6		
	26	0.79	19.50	17.92	144.9	113	2,720	151.2		
	27	0.85	19.50	17.80	155.4	113	2,910	161.7		
	28	0.92	19.50	17.66	167.5	113	3,130	173.8		
20	21	0.57	21.60	20.46	117.5	134	2,250	124.9		
	22	0.62	21.60	20.36	127.5	134	2,430	134.9		
	23	0.67	21.60	20.26	137.5	134	2,610	144.9		
	24	0.72	21.60	20.16	147.4	134	2,785	154.8		
	25	0.78	21.60	20.04	159.2	134	3,000	166.6		
	26	0.84	21.60	19.92	170.9	134	3,210	178.3		
	27	0.91	21.60	19.78	184.5	134	3,455	191.9		
	28	0.98	21.60	19.64	198.1	134	3,700	205.5		
24	21	0.63	25.80	24.54	155.4	177	2,975	165.2		
	22	0.68	25.80	24.44	167.4	177	3,190	177.2		
	23	0.73	25.80	24.34	179.4	177	3,405	189.2		
	24	0.79	25.80	24.22	193.7	177	3,665	203.5		
	25	0.85	25.80	24.10	207.9	177	3,920	217.7		
	26	0.92	25.80	23.96	224.4	177	4,215	234.2		
	27	0.99	25.80	23.82	240.8	177	4,510	250.6		
	28	1.07	25.80	23.66	259.4	177	4,845	269.2		

† Heavier thickness classes can be furnished when specified.
‡ Including bell. Calculated weight of pipe rounded off to nearest 5 lb.
§ Including bell. Average weight per foot based on calculated weight of pipe before rounding.

TABLE 6.6

Standard Thickness Classes, Thicknesses, Diameters, and Weights of Mechanical-Joint Pipe Centrifugally Cast in Metal Molds

Size *in.*	Thickness Class†	Thickness	OD	ID	Weight of Barrel per Foot	Weight of Bell	Weight Based on 18-ft Laying Length		Weight Based on 20-ft Laying Length	
							Per Length‡	Avg. per Foot§	Per Length‡	Avg. per Foot§
		in.			*lb*					
3*	22	0.32	3.96	3.32	11.4	11	215	12.0	240	11.9
	23	0.35	3.96	3.26	12.4	11	235	13.0	260	12.9
	24	0.38	3.96	3.20	13.3	11	250	13.9	275	13.8
4	22	0 35	4.80	4.10	15.3	16	290	16.2	320	16.1
	23	0.38	4.80	4.04	16.5	16	315	17.4	345	17.3
	24	0.41	4.80	3.98	17.6	16	335	18.5	370	18.4
	25	0.44	4.80	3.92	18.8	16	355	19.7	390	19.6
6	22	0.38	6.90	6.14	24.3	22	460	25.5	510	25.4
	23	0.41	6.90	6.08	26.1	22	490	27.3	545	27.2
	24	0.44	6.90	6.02	27.9	22	525	29.1	580	29.0
	25	0.48	6.90	5.94	30.2	22	565	31.4	625	31.3
	26	0.52	6.90	5.86	32.5	22	605	33.7	670	33.6
8	22	0.41	9.05	8.23	34.7	30	655	36.4	725	36.2
	23	0.44	9.05	8.17	37.1	30	700	38.8	770	38.6
	24	0.48	9.05	8.09	40.3	30	755	42.0	835	41.8
	25	0.52	9.05	8.01	43.5	30	815	45.2	900	45.0
	26	0.56	9.05	7.93	46.6	30	870	48.3	960	48.1
	27	0.60	9.05	7.85	49.7	30	925	51.4	1,025	51.2
10	22	0.44	11.10	10.22	46.0	40	870	48.2	960	48.0
	23	0.48	11.10	10.14	50.0	40	940	52.2	1,040	52.0
	24	0.52	11.10	10.06	53.9	40	1,010	56.1	1,120	55.9
	25	0.56	11.10	9.98	57.9	40	1,080	60.1	1,200	59.9
	26	0.60	11.10	9.90	61.8	40	1,150	64.0	1,275	63.8
	27	0.65	11.10	9.80	66.6	40	1,240	68.8	1,370	68.6
12	22	0.48	13.20	12.24	59.8	50	1,125	62.6	1,245	62.3
	23	0.52	13.20	12.16	64.6	50	1,215	67.4	1,340	67.1
	24	0.56	13.20	12.08	69.4	50	1,300	72.2	1,440	71.9
	25	0.60	13.20	12.00	74.1	50	1,385	76.9	1,530	76.6
	26	0.65	13.20	11.90	80.0	50	1,490	82.8	1,650	82.5
	27	0.70	13.20	11.80	85.8	50	1,595	88.6	1,765	88.3
	28	0.76	13.20	11.68	92.7	50	1,720	95.5	1,905	95.2

* Pipe of 3-in. size also available in 12-ft laying length. Weight (lb) per length‡ for thickness class 22 is 150; for 23, 160; for 24, 170. Average weight (lb) per foot§ for thickness class 22 is 12.3; for 23, 13.3; for 24, 14.2
† Heavier thickness classes can be furnished when specified.
‡ Including bell. Calculated weight of pipe rounded off to nearest 5 lb.
§ Including bell. Average weight per foot based on calculated weight of pipe before rounding.

modulus of elasticity of the ring, as this is not and has never been specified or required in the specification.

Tables. Mechanical-joint and push-on-joint pipe have only one outside diameter. Since their general acceptance by the water industry, the use of bell-and-spigot pipe to a different outside diameter has decreased to a very small percentage. In this standard, a single outside diameter has been selected for each size of pipe in the bell-and-spigot tables. This outside diameter is the smaller of the two diameters shown in the previous standard for sizes 4–24 in.

Tables for mechanical-joint pipe are included showing dimensions, thicknesses, and weights in the same format as the bell-and-spigot tables.

All tables are revised to include the pipe lengths presently being produced.

Options

This standard includes certain options which, if desired, must be specified on the purchase order. Also, a number of items must be specified to describe completely the pipe required. The following summarizes these details and available options, and lists the sections of the standard where they can be found:

Pipe Detail and Option	*Reference*
Size, joint type, thickness or pressure class, and laying length	Tables
Special joints	Sec. 6–3.1.
Certification by manufacturer	Sec. 6–4
Inspection by purchaser	Sec. 6–5
Cement lining	Sec. 6–8.2.
Special coatings and linings	Sec. 6–8.2.
Special markings on pipe	Sec. 6–10
Written transcripts of foundry records	Sec. 6–15
Special tests	Sec. 6–16
Bell-and-spigot pipe with special outside diameter	Table 6.1 (Note)

Committee Personnel

Subcommittee No. 1, which reviewed A21.6–1953 and developed this revision, had the following personnel at that time:

J. Thompson Vann, *Chm.*
Edwin B. Cobb, *Vice-Chm.*

User Members	*Producer Members*
Frank E. Dolson	Louis A. Camerota
Richmond C. Holcombe	Carl A. Henrikson
Rolf H. Jensen	Charles C. Salvage
Robert C. Kauffman	Sidney P. Teague
Loring E. Tabor	

The A21 sectional committtee on cast-iron pipe and fittings, which reviewed and approved this A21.6 standard, had the following personnel at the time of approval:

Edwin B. Cobb, *Chm.*
Herbert W. Stuart, *Vice-Chm.*
Raymond J. Faust, *Secy.*

Organization Represented	*Name of Representative*
American Gas Association	Richmond C. Holcombe
American Society of Civil Engineers	K. W. Henderson
American Society of Mechanical Engineers	Louis R. Howson
American Society for Testing and Materials	Harry P. Hagedorn
American Water Works Association	S. Logan Kerr
Cast Iron Pipe Research Association	Thomas F. Wolfe Herbert W. Stuart J. Thompson Vann
Manufacturers' Standardization Society of the Valve and Fittings Industry	G. A. MacDonald
New England Water Works Association	Edwin B. Cobb
Standardization Division, General Services Administration	W. T. Thomasson
Member at Large	Rolf H. Jensen

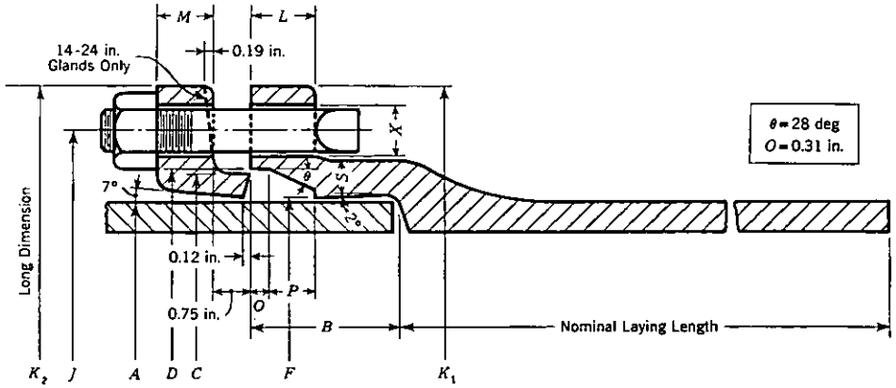

Standard Mechanical-Joint Dimensions (See Table 6.5)

Notes

1. The thickness of the bell, S, shall in all instances be equal to, and generally exceeds by at least 10 per cent, the nominal wall thickness of the pipe of which it is a part.
2. Cored holes may be tapered an additional 0.06 in. in diameter.
3. In the event of ovalness of the spigot OD, the mean diameter measured by a circumferential tape shall not be less than the minimum diameter shown in the table. The minor axis shall not be less than the minimum diameter shown in the table plus an additional minus tolerance of 0.04 in. for sizes 8–12 in., and 0.07 in. for sizes 14–24 in.
4. K_2 is OD of glands across bolt holes; outside of gland may have polygon shape.
5. This joint conforms to ASA A21.11 (AWWA C111).

TABLE 6.5

Standard Mechanical-Joint Dimensions for Pipe Centrifugally Cast in Metal Molds

Size	Outside Diam. of Spigot End A	B	C	D	F	X	J	K_1	K_2	L	M	P	S	Bolts			Weight	
														No.	Size	Length	Bell	Gland, Bolts, & Gasket
	Dimension—in.														in.		lb	
3	3.96 ±.06	2.50	4.84 ±.04	4.94 +.06 −.04	4.06 +.07 −.03	⅜ +.06 −.0	6.19 ±.06	7.62 +.06 −.06	7.69 +.06 −.12	.94 +.06 −.06	.62 +.06 −.06	.63	.47 +.05 −.05	4	⅝	3	11	7
4	4.80 ±.06	2.50	5.92 ±.04	6.02 +.06 −.04	4.90 +.07 −.03	⅜ +.06 −.0	7.50 ±.06	9.06 +.06 −.06	9.12 +.06 −.12	1.00 +.06 −.06	.75 +.06 −.06	.75	.55 +.05 −.05	4	¾	3½	16	10
6	6.90 ±.06	2.50	8.02 ±.04	8.12 +.06 −.04	7.00 +.07 −.03	⅜ +.06 −.0	9.50 ±.06	11.06 +.06 −.06	11.12 +.06 −.12	1.06 +.06 −.06	.88 +.06 −.06	.75	.60 +.05 −.05	6	¾	3½	22	16
8	9.05 ±.06	2.50	10.17 ±.04	10.27 +.06 −.04	9.15 +.07 −.03	⅜ +.06 −.0	11.75 ±.06	13.31 +.06 −.06	13.37 +.06 −.12	1.12 +.06 −.08	1.00 +.06 −.08	.75	.66 +.05 −.05	6	¾	4	30	25
10	11.10 ±.06	2.50	12.22 +.06 −.04	12.34 +.06 −.04	11.20 +.07 −.03	⅜ +.06 −.0	14.00 ±.06	15.62 +.06 −.06	15.62 +.06 −.12	1.19 +.06 −.08	1.00 +.06 −.08	.75	.72 +.06 −.06	8	¾	4	40	30
12	13.20 ±.06	2.50	14.32 +.06 −.04	14.44 +.06 −.04	13.30 +.07 −.03	⅜ +.06 −.0	16.25 ±.06	17.88 +.06 −.06	17.88 +.06 −.12	1.25 +.06 −.08	1.00 +.06 −.08	.75	.79 +.06 −.06	8	¾	4	50	40
14	15.30 +.05 −.08	3.50	16.40 +.07 −.05	16.54 +.07 −.05	15.44 +.06 −.07	⅜ +.06 −.0	18.75 ±.06	20.25 +.06 −.08	20.25 +.06 −.12	1.31 +.06 −.12	1.25 +.06 −.12	.75	.85 +.06 −.08	10	¾	4	78	45
16	17.40 +.05 −.08	3.50	18.50 +.07 −.05	18.64 +.07 −.05	17.54 +.06 −.07	⅜ +.06 −.0	21.00 ±.06	22.50 +.06 −.08	22.50 +.06 −.12	1.38 +.06 −.12	1.31 +.06 −.12	.75	.91 +.06 −.08	12	¾	4½	95	55
18	19.50 +.05 −.08	3.50	20.60 +.07 −.05	20.74 +.07 −.05	19.64 +.06 −.07	⅜ +.06 −.0	23.25 ±.06	24.75 +.06 −.08	24.75 +.06 −.15	1.44 +.06 −.12	1.38 +.06 −.12	.75	.97 +.06 −.08	12	¾	4½	113	65
20	21.60 +.05 −.08	3.50	22.70 +.07 −.05	22.84 +.07 −.05	21.74 +.06 −.07	⅜ +.06 −.0	25.50 ±.06	27.00 +.06 −.08	27.00 +.06 −.15	1.50 +.06 −.12	1.44 +.06 −.12	.75	1.03 +.06 −.08	14	¾	4½	134	85
24	25.80 +.05 −.08	3.50	26.90 +.07 −.05	27.04 +.07 −.05	25.94 +.06 −.07	⅜ +.06 −.0	30.00 ±.06	31.50 +.06 −.08	31.50 +.06 −.15	1.62 +.06 −.12	1.56 +.06 −.12	.75	1.08 +.06 −.08	16	¾	5	177	105

UDC 621.774.1

ASA

A21.6-1962
(AWWA C106-62)
Revision of
A21.6-1953
(AWWA C106-53)

American Standard for

Cast-Iron Pipe Centrifugally Cast in Metal Molds, for Water or Other Liquids

Sec. 6-1—Scope

This standard covers 3-24-in. heat-treated, cast-iron pipe centrifugally cast in metal molds. Characteristics of such pipe with bell-and-spigot joints and mechanical joints are given in the tables. This standard may be used for pipe with such other types of joints as may be agreed upon at the time of purchase.

Sec. 6-2—Definitions

Under this standard, the following definitions shall apply:

6-2.1. *Purchaser.* The party entering into a contract or agreement to purchase pipe according to this standard.

6-2.2. *Manufacturer.* The party that produces the pipe.

6-2.3. *Inspector.* The representative of the purchaser, authorized to inspect in behalf of the purchaser to determine whether or not the pipe meet this standard.

6-2.4. *Heat.* The period during which pipe are cast and the melting unit is operated continuously.

6-2.5. *Bell-and-spigot joint.* The poured or calked joint as detailed in Table 6.1.

6-2.6. *Mechanical joint.* The gasketed and bolted joint as detailed in Table 6.5.

Sec. 6-3—General Requirements

6-3.1. Pipe with bell-and-spigot joints and mechanical joints shall conform to the dimensions and weights shown in the tables in this standard unless otherwise agreed upon at the time of purchase. The mechanical joints shall also conform in all respects to ASA A21.11 (AWWA C111), latest revision. Pipe with other types of joints shall comply with the joint dimensions and weights agreed upon, but in all other respects shall fulfill the requirements hereinafter given.

6-3.2. The nominal laying length of the pipe shall be as shown in the tables. A maximum of 10 per cent of the total number of pipe of each size of an order may be furnished as much as 24 in. shorter than the nominal laying length. An additional 10 per cent may be furnished as much as 3 in. shorter than nominal laying length.

Sec. 6-4—Inspection and Certification by Manufacturer

The manufacturer shall establish the necessary quality control and inspection practice to assure compliance with this standard.

The manufacturer shall, if required on the purchase order, furnish a sworn statement that the inspection and all of the specified tests have been made and the results thereof comply with the requirements of this standard.

Sec. 6–5—Inspection by Purchaser

When the purchaser desires to inspect pipe at the manufacturer's plant, the purchaser shall so specify on the purchase order, stating the conditions (such as time and the extent of the inspection) under which the inspection shall be made.

6–5.1. The inspector shall have free access to those parts of the manufacturer's plant which are necessary to assure compliance with this specification. The manufacturer shall make available for the inspector's use such gages as are necessary for inspection. The manufacturer shall provide the inspector with such handling assistance as necessary.

Sec. 6–6—Delivery and Acceptance

All pipe and accessories shall comply with this standard. Pipe and accessories not complying with this standard shall be replaced by the manufacturer at the agreed point of delivery. The manufacturer shall not be liable for shortages or damaged pipe after acceptance at the agreed point of delivery except as recorded on the delivery receipt or similar document by the carrier's agent.

Sec. 6–7—Tolerances or Permitted Variations

6–7.1. *Dimensions.* Pipe and accessories shall be gaged at sufficiently frequent intervals to determine whether or not they comply with the dimensions listed in the tables shown in this standard. The inside of the sockets and outside of the spigot ends shall be tested with circular gages.

6–7.2. *Thickness.* Tolerances below the standard thicknesses of pipe and bell shall not be more than those shown below:

Pipe Size *in.*	Minus Tolerance *in.*
3–8	0.05
10–12	0.06
14–24	0.08

NOTE: An additional tolerance of 0.02 in. shall be permitted over areas not exceeding 8 in. in any direction.

6–7.3. *Weight.* The weight of any single pipe shall not be less than the nominal tabulated weight by more than 5 per cent for pipe 12 in. or smaller in diameter nor by more than 4 per cent for pipe larger than 12 in. in diameter. The total weight of any order of 25 tons or more shall not be more than 2 per cent under the total nominal weight. When an order includes 25 tons or more of one size pipe, this one size shall not be more than 2 per cent under the total nominal weight of this size. An order, as used in this section, is defined as including all pipe purchased under a single contract or a single release for shipment under a standing contract. Unless otherwise specified on the purchase order, a ton shall be 2,000 lb avoirdupois.

Sec. 6–8—Coatings and Linings

6–8.1. *Standard outside coatings.* The standard outside coating for general use under all normal conditions shall be a bituminous coating of either coal tar or asphalt base approximately 1 mil thick. The standard coating shall be applied to the outside of all pipe unless otherwise specified. The fin-

TABLE 6.4—(*contd.*)

Standard Thicknesses of Pipe Centrifugally Cast in Metal Molds*

Laying Condition A—flat-bottom trench, without blocks, untamped backfill
Laying Condition B—flat-bottom trench, without blocks, tamped backfill
Laying Condition C—pipe laid on blocks, untamped backfill
Laying Condition D—pipe laid on blocks, tamped backfill

Size *in.*	Working Pressure *psi*	3½-ft Cover				5-ft Cover				8-ft Cover			
		Laying Condition				Laying Condition				Laying Condition			
		A	B	C	D	A	B	C	D	A	B	C	D
		Thickness*—*in.*											
14	50	0.51	0.48	0.59	0.51	0.51	0.48	0.59	0.55	0.59	0.55	0.69	0.59
	100	0.51	0.48	0.59	0.55	0.55	0.51	0.64	0.55	0.59	0.55	0.69	0.64
	150	0.55	0.51	0.59	0.55	0.55	0.51	0.64	0.59	0.64	0.59	0.75	0.64
	200	0.55	0.51	0.64	0.59	0.55	0.55	0.64	0.59	0.64	0.59	0.75	0.69
	250	0.59	0.55	0.64	0.59	0.59	0.59	0.69	0.59	0.64	0.64	0.75	0.69
	300	0.59	0.59	0.69	0.59	0.64	0.59	0.69	0.64	0.69	0.64	0.81	0.69
	350	0.64	0.64	0.69	0.64	0.64	0.64	0.75	0.69	0.75	0.69	0.81	0.75
16	50	0.54	0.50	0.63	0.58	0.58	0.54	0.63	0.58	0.63	0.58	0.73	0.63
	100	0.54	0.54	0.63	0.58	0.58	0.54	0.68	0.58	0.63	0.58	0.73	0.68
	150	0.58	0.54	0.63	0.58	0.58	0.54	0.68	0.63	0.68	0.63	0.79	0.68
	200	0.58	0.58	0.68	0.63	0.63	0.58	0.68	0.63	0.68	0.63	0.79	0.73
	250	0.63	0.58	0.68	0.63	0.63	0.63	0.73	0.68	0.73	0.68	0.79	0.73
	300	0.63	0.63	0.73	0.68	0.68	0.68	0.73	0.68	0.73	0.73	0.85	0.79
	350	0.68	0.68	0.73	0.68	0.73	0.68	0.79	0.73	0.79	0.73	0.85	0.79
18	50	0.58	0.54	0.63	0.58	0.58	0.54	0.68	0.63	0.68	0.63	0.79	0.68
	100	0.58	0.54	0.68	0.63	0.63	0.58	0.73	0.63	0.68	0.63	0.79	0.73
	150	0.63	0.58	0.68	0.63	0.63	0.58	0.73	0.68	0.73	0.68	0.79	0.73
	200	0.63	0.58	0.73	0.68	0.68	0.63	0.73	0.68	0.73	0.68	0.85	0.79
	250	0.68	0.63	0.73	0.68	0.68	0.68	0.79	0.73	0.79	0.73	0.85	0.79
	300	0.68	0.68	0.79	0.73	0.73	0.73	0.79	0.79	0.79	0.79	0.92	0.85
	350	0.79	0.73	0.79	0.79	0.79	0.79	0.85	0.79	0.85	0.85	0.92	0.85
20	50	0.62	0.57	0.72	0.62	0.67	0.57	0.72	0.67	0.72	0.67	0.78	0.72
	100	0.62	0.57	0.72	0.67	0.67	0.62	0.78	0.67	0.72	0.67	0.84	0.78
	150	0.67	0.62	0.72	0.67	0.67	0.62	0.78	0.72	0.78	0.72	0.84	0.78
	200	0.67	0.62	0.78	0.72	0.72	0.67	0.78	0.72	0.78	0.72	0.91	0.84
	250	0.72	0.67	0.78	0.72	0.78	0.72	0.84	0.78	0.84	0.78	0.91	0.84
	300	0.78	0.72	0.84	0.78	0.78	0.78	0.84	0.84	0.84	0.84	0.98	0.91
	350	0.84	0.78	0.84	0.84	0.84	0.84	0.91	0.84	0.91	0.84	0.98	0.91
24	50	0.68	0.63	0.79	0.68	0.73	0.63	0.79	0.73	0.79	0.73	0.85	0.79
	100	0.73	0.63	0.79	0.73	0.73	0.68	0.85	0.79	0.85	0.73	0.92	0.85
	150	0.73	0.68	0.79	0.79	0.79	0.73	0.85	0.79	0.85	0.79	0.92	0.85
	200	0.79	0.73	0.85	0.79	0.79	0.79	0.92	0.85	0.92	0.85	0.99	0.92
	250	0.79	0.79	0.85	0.85	0.85	0.79	0.92	0.85	0.92	0.85	0.99	0.99
	300	0.85	0.85	0.92	0.85	0.92	0.85	0.99	0.92	0.99	0.92	1.07	0.99
	350	0.92	0.92	0.99	0.92	0.99	0.92	0.99	0.99	1.07	0.99	1.07	1.07

* Thicknesses include allowances for foundry practice, corrosion, and either water hammer or truck load.

TABLE 6.4

Standard Thicknesses of Pipe Centrifugally Cast in Metal Molds*

Laying Condition A—flat-bottom trench, without blocks, untamped backfill
Laying Condition B—flat-bottom trench, without blocks, tamped backfill
Laying Condition C—pipe laid on blocks, untamped backfill
Laying Condition D—pipe laid on blocks, tamped backfill

Size *in.*	Working Pressure *psi*	3½-ft Cover				5-ft Cover				8-ft Cover			
		Laying Condition				Laying Condition				Laying Condition			
		A	B	C	D	A	B	C	D	A	B	C	D
		Thickness*—*in.*											
3†	50	0.32	0.32	0.32	0.32	0.32	0.32	0.32	0.32	0.32	0.32	0.38	0.32
	100	0.32	0.32	0.32	0.32	0.32	0.32	0.32	0.32	0.32	0.32	0.38	0.32
	150	0.32	0.32	0.32	0.32	0.32	0.32	0.32	0.32	0.32	0.32	0.38	0.32
	200	0.32	0.32	0.32	0.32	0.32	0.32	0.32	0.32	0.32	0.32	0.38	0.32
	250	0.32	0.32	0.32	0.32	0.32	0.32	0.35	0.32	0.32	0.32	0.38	0.32
	300	0.32	0.32	0.32	0.32	0.32	0.32	0.35	0.32	0.32	0.32	0.38	0.32
	350	0.32	0.32	0.32	0.32	0.32	0.32	0.35	0.32	0.32	0.32	0.38	0.32
4†	50	0.35	0.35	0.35	0.35	0.35	0.35	0.35	0.35	0.35	0.35	0.41	0.35
	100	0.35	0.35	0.35	0.35	0.35	0.35	0.35	0.35	0.35	0.35	0.41	0.35
	150	0.35	0.35	0.35	0.35	0.35	0.35	0.38	0.35	0.35	0.35	0.41	0.35
	200	0.35	0.35	0.35	0.35	0.35	0.35	0.38	0.35	0.35	0.35	0.44	0.35
	250	0.35	0.35	0.35	0.35	0.35	0.35	0.38	0.35	0.35	0.35	0.44	0.35
	300	0.35	0.35	0.35	0.35	0.35	0.35	0.38	0.35	0.35	0.35	0.44	0.35
	350	0.35	0.35	0.38	0.35	0.35	0.35	0.38	0.35	0.35	0.35	0.44	0.35
6†	50	0.38	0.38	0.41	0.38	0.38	0.38	0.44	0.38	0.38	0.38	0.48	0.38
	100	0.38	0.38	0.41	0.38	0.38	0.38	0.44	0.38	0.38	0.38	0.48	0.38
	150	0.38	0.38	0.41	0.38	0.38	0.38	0.44	0.38	0.38	0.38	0.48	0.38
	200	0.38	0.38	0.41	0.38	0.38	0.38	0.44	0.38	0.38	0.38	0.52	0.38
	250	0.38	0.38	0.44	0.38	0.38	0.38	0.44	0.38	0.38	0.38	0.52	0.38
	300	0.38	0.38	0.44	0.38	0.38	0.38	0.44	0.38	0.38	0.38	0.52	0.38
	350	0.38	0.38	0.44	0.38	0.38	0.38	0.48	0.38	0.38	0.38	0.52	0.38
8†	50	0.41	0.41	0.44	0.41	0.41	0.41	0.48	0.41	0.41	0.41	0.52	0.41
	100	0.41	0.41	0.48	0.41	0.41	0.41	0.48	0.41	0.41	0.41	0.56	0.41
	150	0.41	0.41	0.48	0.41	0.41	0.41	0.48	0.41	0.41	0.41	0.56	0.41
	200	0.41	0.41	0.48	0.41	0.41	0.41	0.52	0.41	0.41	0.41	0.56	0.44
	250	0.41	0.41	0.48	0.41	0.41	0.41	0.52	0.41	0.44	0.41	0.56	0.44
	300	0.41	0.41	0.48	0.41	0.41	0.41	0.52	0.41	0.44	0.44	0.60	0.44
	350	0.41	0.41	0.52	0.41	0.44	0.41	0.52	0.44	0.48	0.44	0.60	0.48
10	50	0.44	0.44	0.48	0.44	0.44	0.44	0.52	0.44	0.44	0.44	0.60	0.48
	100	0.44	0.44	0.52	0.44	0.44	0.44	0.52	0.44	0.48	0.44	0.60	0.48
	150	0.44	0.44	0.52	0.44	0.44	0.44	0.56	0.44	0.48	0.44	0.60	0.48
	200	0.44	0.44	0.52	0.44	0.44	0.44	0.56	0.44	0.48	0.48	0.60	0.52
	250	0.44	0.44	0.56	0.44	0.48	0.44	0.56	0.48	0.52	0.48	0.65	0.52
	300	0.48	0.44	0.56	0.48	0.48	0.48	0.56	0.48	0.52	0.52	0.65	0.56
	350	0.48	0.48	0.56	0.48	0.52	0.52	0.60	0.52	0.56	0.52	0.65	0.56
12	50	0.48	0.48	0.52	0.48	0.48	0.48	0.56	0.48	0.52	0.48	0.65	0.52
	100	0.48	0.48	0.56	0.48	0.48	0.48	0.56	0.48	0.52	0.48	0.65	0.52
	150	0.48	0.48	0.56	0.48	0.48	0.48	0.56	0.48	0.52	0.52	0.65	0.56
	200	0.48	0.48	0.56	0.48	0.48	0.48	0.60	0.52	0.56	0.52	0.65	0.56
	250	0.52	0.48	0.60	0.52	0.52	0.52	0.60	0.52	0.56	0.56	0.70	0.60
	300	0.52	0.52	0.60	0.52	0.56	0.52	0.60	0.56	0.60	0.56	0.70	0.60
	350	0.56	0.56	0.60	0.56	0.56	0.56	0.65	0.60	0.60	0.60	0.76	0.65

* Thicknesses include allowances for foundry practice, corrosion, and either water hammer or truck load.
† Pipe of the thickness shown for C condition are safe as beams for only the most favorable block spacing. See ASA A21.1 (AWWA C101).

ished coating shall be continuous, smooth, neither brittle when cold nor sticky when exposed to the sun, and shall be strongly adherent to the pipe.

6–8.2. *Cement mortar linings.* Cement linings shall be in accordance with ASA A21.4 (AWWA C104). Cement linings are recommended for most waters and if desired, shall be specified on the purchase order.

For special conditions, other types of coatings and linings may be available. Such special coatings and linings shall be agreed upon at the time of purchase and shall be specified on the purchase order.

6–8.3. *Bituminous inside coating.* The inside coating for pipe not cement lined shall be a bituminous material similar to the standard outside coating, as thick as practicable, at least 1 mil thick. The coating, after drying 48 hr, shall impart no objectionable color, odor, or taste to water in contact with the coating for a minimum of 48 hr. The bituminous inside coating shall be applied to the inside surface of all pipe unless otherwise specified. Experience has indicated that such coating is not complete protection against loss in pipe capacity due to tuberculation.

Sec. 6–9—Hydrostatic Test

Each pipe shall be subjected to a 500-psi hydrostatic proof test. This test may be made either before or after the standard outside coating and the bituminous inside coating have been applied, but shall be made before the application of cement lining or of a special lining. This requirement is not intended to preclude retesting, at the manufacturer's option, after application of a cement or special lining.

The pipe shall be under the full test pressure for at least 10 sec. Suitable controls and recording devices shall be provided so that the test pressure and duration may be adequately ascertained. Any pipe that leaks or does not withstand the test pressure shall be rejected.

Sec. 6–10—Marking Pipe

The weight, class designation, and sampling period shall be shown on each pipe. The manufacturer's mark and the year in which the pipe was produced shall be cast on the face of the bell. When specified by the purchaser, initials not exceeding four in number shall be cast or stamped on the face of the bell. All required markings shall be clear and legible, in letters and numerals not less than ½ in. in height.

Sec. 6–11—Weighing

Each pipe shall be weighed before the application of any lining or coating other than the standard coating, and the weight shown on the outside or inside of the bell or spigot end.

Sec. 6–12—Acceptance Tests

The standard acceptance tests for the physical characteristics of the pipe shall be as follows:

Sec. 6–12.1—Talbot Strip Tests

Talbot strip tests shall be used to determine the acceptability of 3–24 in. pipe for modulus of rupture and secant modulus of elasticity.

6–12.1.1. *Sampling.* For sampling, each heat shall be divided into periods of approximately 3 hr; at least one sample shall be taken during each period. The sample for the first period shall be taken during the first hour, or if casting is direct from the melting unit, from the first ladle. Samples shall be taken so that each size of pipe

cast for 2 hr or longer during the heat and each mixture or source of iron used for 2 hr or longer during the heat shall be fairly represented.

6–12.1.2. *Method of testing.* The method of testing Talbot strips is given in the Appendix, Sec. 6–A1.

6–12.1.3. *Acceptance values.* The acceptance values for tests on Talbot strips from 3–24-in. pipe shall be as follows:

Modulus of rupture: 40,000 psi minimum

Secant modulus of elasticity: 12,000,000 psi maximum.

If the modulus of elasticity exceeds 12,000,000 psi, the modulus of rupture shall exceed 40,000 psi in at least the same proportion.

Sec. 6–12.2—Hardness Tests

After heat treating, hardness determinations shall be made on the outside of the pipe. A sufficient number of pipe shall be tested to assure that the Rockwell hardness number or its equivalent does not exceed B-95. Pipe may be reheat treated to meet this requirement. For the purpose of foundry records (Sec. 6–15), hardness tests shall be made also on Talbot strips as noted in the Appendix, Sec. 6–A1.

Sec. 6–13—Ring Tests and Full-Length Bursting Tests

The manufacturer shall make bursting tests and ring tests in conjunction with strip tests so that he can certify the design values of the modulus of rupture (40,000 psi) and the bursting tensile strength of the iron in the pipe (18,000 psi). These tests shall be made in accordance with dimensions and methods given in the Appendix, Sec. 6–A2 and Sec. 6–A3. At least one pipe sample for these ring and bursting tests shall be selected from each of the following size groups from each calendar month's cast:

Group	Size *in.*
1	6, 8
2	10, 12
3	14, 16, 18
4	20, 24

When no pipe in a size group are manufactured during the calendar month, no tests on these sizes are required. Ring tests and bursting tests are not required on 3- and 4-in. pipe. At least three Talbot strips shall be tested from each pipe selected for bursting. Tests and records shall include the modulus of rupture of each strip and ring, and the modulus of elasticity and hardness of each strip.

Sec. 6–14—Chemical Analyses

Analyses of the iron shall be made at sufficiently frequent intervals during the heat to determine compliance with the following limits:

Substance	Maximum Limit *per cent*
Phosphorus	0.90
Sulfur	0.12

Control of the other chemical constituents shall be maintained to meet the physical property requirements of this standard. Samples for chemical analyses shall be representative and shall be obtained by drilling either acceptance test specimens or specimens cast for this purpose.

Sec. 6–15—Foundry Records

The results of the following tests shall be recorded and retained for 1 year and shall be available to the purchaser at the foundry. Written transcripts of the results of these tests shall

TABLE 6.3—(*contd.*)

Standard Thicknesses, Diameters, and Weights of Bell-and-Spigot Pipe Centrifugally Cast in Metal Molds

These thicknesses and weights are for pipe laid without blocks, on flat-bottom trench, with tamped backfill (laying condition B), under 5 ft of cover. For other conditions see tables 6.2 and 6.4 hereof and ASA A21.1 (AWWA C101).

Size	Thickness	OD	Weight Based on 18-ft Laying Length		Weight Based on 20-ft Laying Length	
			Per Length†	Avg. per Foot‡	Per Length†	Avg. per Foot‡
in.			*lb*			
Working Pressure 250 psi—577 ft Head						
3*	0.32	3.96	215	12.0	240	11.9
4	0.35	4.80	290	16.1	320	16.0
6	0.38	6.90	460	25.6	510	25.6
8	0.41	9.05	665	36.9	735	36.8
10	0.44	11.10	880	49.0	975	48.7
12	0.52	13.20	1,230	68.3	1,360	67.9
14	0.59	15.30	1,610	89.5		
16	0.63	17.40	1,960	109.0		
18	0.68	19.50	2,370	131.8		
20	0.72	21.60	2,785	154.8		
24	0.79	25.80	3,665	203.6		
Working Pressure 300 psi—693 ft Head						
3*	0.32	3.96	215	12.0	240	11.9
4	0.35	4.80	290	16.1	320	16.0
6	0.38	6.90	460	25.6	510	25.6
8	0.41	9.05	665	36.9	735	36.8
10	0.48	11.10	955	53.0	1,055	52.7
12	0.52	13.20	1,230	68.3	1,360	67.9
14	0.59	15.30	1,610	89.5		
16	0.68	17.40	2,100	116.8		
18	0.73	19.50	2,530	140.6		
20	0.78	21.60	3,000	166.6		
24	0.85	25.80	3,920	217.8		
Working Pressure 350 psi—808 ft Head						
3*	0.32	3.96	215	12.0	240	11.9
4	0.35	4.80	290	16.1	320	16.0
6	0.38	6.90	460	25.6	510	25.6
8	0.41	9.05	665	36.9	735	36.8
10	0.52	11.10	1,025	56.9	1,130	56.6
12	0.56	13.20	1,315	73.1	1,455	72.7
14	0.64	15.30	1,735	96.5		
16	0.68	17.40	2,100	116.8		
18	0.79	19.50	2,720	151.2		
20	0.84	21.60	3,210	178.4		
24	0.92	25.80	4,220	234.4		

* Pipe of 3-in. size also available in 12-ft laying length. Weight per length† is 150 lb; average weight per foot‡ is 12.5 lb for all working pressures and heads.
† Including bell. Calculated weight of pipe rounded off to nearest 5 lb.
‡ Including bell. Average weight per foot based on calculated weight of pipe before rounding.

TABLE 6.3

Standard Thicknesses, Diameters, and Weights of Bell-and-Spigot Pipe Centrifugally Cast in Metal Molds

These thicknesses and weights are for pipe laid without blocks, on flat-bottom trench, with tamped backfill (laying condition B), under 5 ft of cover. For other conditions see tables 6.2 and 6.4 hereof and ASA A21.1 (AWWA C101).

Size	Thickness	OD	Weight Based on 18-ft Laying Length		Weight Based on 20-ft Laying Length	
			Per Length†	Avg. per Foot‡	Per Length†	Avg. per Foot‡
in.			*lb*			
Working Pressure 50 psi—115 ft Head						
3*	0.32	3.96	215	12.0	240	11.9
4	0.35	4.80	290	16.1	320	16.0
6	0.38	6.90	460	25.6	510	25.6
8	0.41	9.05	665	36.9	735	36.8
10	0.44	11.10	880	49.0	975	48.7
12	0.48	13.20	1,140	63.4	1,260	63.1
14	0.48	15.30	1,335	74.1		
16	0.54	17.40	1,700	94.5		
18	0.54	19.50	1,920	106.7		
20	0.57	21.60	2,250	124.9		
24	0.63	25.80	2,975	165.3		
Working Pressure 100 psi—231 ft Head						
3*	0.32	3.96	215	12.0	240	11.9
4	0.35	4.80	290	16.1	320	16.0
6	0.38	6.90	460	25.6	510	25.6
8	0.41	9.05	665	36.9	735	36.8
10	0.44	11.10	880	49.0	975	48.7
12	0.48	13.20	1,140	63.4	1,260	63.1
14	0.51	15.30	1,410	78.2		
16	0.54	17.40	1,700	94.5		
18	0.58	19.50	2,050	113.9		
20	0.62	21.60	2,430	134.9		
24	0.68	25.80	3,190	177.3		
Working Pressure 150 psi—346 ft Head						
3*	0.32	3.96	215	12.0	240	11.9
4	0.35	4.80	290	16.1	320	16.0
6	0.38	6.90	460	25.6	510	25.6
8	0.41	9.05	665	36.9	735	36.8
10	0.44	11.10	880	49.0	975	48.7
12	0.48	13.20	1,140	63.4	1,260	63.1
14	0.51	15.30	1,410	78.2		
16	0.54	17.40	1,700	94.5		
18	0.58	19.50	2,050	113.9		
20	0.62	21.60	2,430	134.9		
24	0.73	25.80	3,410	189.4		
Working Pressure 200 psi—462 ft Head						
3*	0.32	3.96	215	12.0	240	11.9
4	0.35	4.80	290	16.1	320	16.0
6	0.38	6.90	460	25.6	510	25.6
8	0.41	9.05	665	36.9	735	36.8
10	0.44	11.10	880	49.0	975	48.7
12	0.48	13.20	1,140	63.4	1,260	63.1
14	0.55	15.30	1,510	83.8		
16	0.58	17.40	1,815	100.9		
18	0.63	19.50	2,210	122.8		
20	0.67	21.60	2,610	144.9		
24	0.79	25.80	3,665	203.6		

* Pipe of 3-in. size also available in 12-ft laying length. Weight per length† is 150 lb; average weight per foot‡ is 12.5 lb for all working pressures and heads.
† Including bell. Calculated weight of pipe rounded off to nearest 5 lb.
‡ Including bell. Average weight per foot based on calculated weight of pipe before rounding.

be furnished when specified on the purchase order:

(a) Talbot strip tests (See Sec. 6–12.1).
(b) Hardness tests (See Sec. 6–12.2).
(c) Ring tests and full-length bursting tests (See Sec. 6–13).
(d) Chemical analyses (See Sec. 6–14).

Sec. 6–16—Additional Tests Required by Purchaser

When tests other than those provided in this standard are required by the purchaser, such tests shall be specified in the invitation for bids and on the purchase order.

Sec. 6–17—Defective Specimens and Retests

When any physical test specimen shows defective machining or lack of continuity of metal, it shall be discarded and replaced by another specimen. When any sound test specimen fails to meet the specified requirements, the pipe from which it was taken shall be rejected and a retest may be made on two additional sound specimens from pipe cast in the same sampling period as the specimen which failed. Both of the additional specimens shall meet the prescribed tests to qualify the pipe produced in that sampling period.

Sec. 6–18—Rejection of Pipe

When any routine chemical analysis fails to meet the requirements of Sec. 6–14 or when any physical acceptance test fails to meet the requirements of Sec. 6–12.1, 6–12.2, or 6–17, the pipe cast in the same sampling period shall be rejected except as subject to the provision of Sec. 6–19.

Sec. 6–19—Determining Rejection

The manufacturer may determine the amount of rejection by making similar additional tests of pipe of the same size as that rejected until the rejected lot is bracketed in order of manufacture by an acceptable test at each end of the interval in question. When pipe of one size is rejected from a sampling period, the acceptability of pipe of different sizes from that same period may be established by making the routine acceptance tests for these sizes.

Appendix *

Table of Contents

Sec. 6–A1—Talbot Strip Tests
Sec. 6–A2—Ring Tests
Sec. 6–A3—Full-Length Bursting Tests

Tables †

Table 6.1—Standard Bell-and-Spigot Joint Dimensions for Pipe Centrifugally Cast in Metal Molds.

Table 6.2—Standard Thickness Classes, Thicknesses, Diameters, and Weights of Bell-and-Spigot Pipe Centrifugally Cast in Metal Molds.

Table 6.3—Standard Thicknesses, Diameters, and Weights of Bell-and-Spigot Pipe Centrifugally Cast in Metal Molds.

Table 6.4—Standard Thicknesses of Pipe Centrifugally Cast in Metal Molds.

Table 6.5—Standard Mechanical-Joint Dimensions for Pipe Centrifugally Cast in Metal Molds.

Table 6.6—Standard Thickness Classes, Thicknesses, Diameters, and Weights of Mechanical-Joint Pipe Centrifugally Cast in Metal Molds.

Table 6.7—Standard Thicknesses, Diameters, and Weights of Mechanical-Joint Pipe Centrifugally Cast in Metal Molds.

---

* This appendix is a part of ASA A21.6—American Standard for Cast-Iron Pipe Centrifugally Cast in Metal Molds, for Water or Other Liquids.

† Data on thicknesses required for greater depths of cover and conditions of laying other than those assumed in the following tables will be found in Table 2.2 of ASA A21.1 (AWWA C101).

Note that the following tables show only one outside diameter as standard for each size pipe. When bell and spigot pipe with special outside diameter is used in sizes of 14 in. and larger, the user is cautioned to specify fittings with socket diameters and spigot outside diameters to fit the special outside-diameter pipe.

TABLE 6.2—(*contd.*)

Standard Thickness Classes, Thicknesses, Diameters, and Weights of Bell-and-Spigot Pipe Centrifugally Cast in Metal Molds

Size *in.*	Thickness Class†	Thickness	OD	ID	Weight of Barrel per Foot	Weight of Bell	Weight Based on 18-ft Laying Length		Weight Based on 20-ft Laying Length	
							Per Length‡	Avg. per Foot§	Per Length‡	Avg. per Foot§
		in.			*lb*					
14	21	0.48	15.30	14.34	69.7	78	1,335	74.1		
	22	0.51	15.30	14.28	73.9	78	1,410	78.2		
	23	0.55	15.30	14.20	79.5	78	1,510	83.8		
	24	0.59	15.30	14.12	85.1	78	1,610	89.5		
	25	0.64	15.30	14.02	92.0	78	1,735	96.5		
	26	0.69	15.30	13.92	98.8	78	1,855	103.1		
	27	0.75	15.30	13.80	107.0	97	2,025	112.4		
	28	0.81	15.30	13.68	115.0	97	2,165	120.4		
16	21	0.50	17.40	16.40	82.8	96	1,585	88.1		
	22	0.54	17.40	16.32	89.2	96	1,700	94.5		
	23	0.58	17.40	16.24	95.6	96	1,815	100.9		
	24	0.63	17.40	16.14	103.6	96	1,960	109.0		
	25	0.68	17.40	16.04	111.4	96	2,100	116.8		
	26	0.73	17.40	15.94	119.3	96	2,245	124.8		
	27	0.79	17.40	15.82	128.6	114	2,430	134.9		
	28	0.85	17.40	15.70	137.9	114	2,595	144.2		
18	21	0.54	19.50	18.42	100.4	114	1,920	106.7		
	22	0.58	19.50	18.34	107.6	114	2,050	113.9		
	23	0.63	19.50	18.24	116.5	114	2,210	122.8		
	24	0.68	19.50	18.14	125.4	114	2,370	131.8		
	25	0.73	19.50	18.04	134.3	114	2,530	140.6		
	26	0.79	19.50	17.92	144.9	114	2,720	151.2		
	27	0.85	19.50	17.80	155.4	137	2,935	163.0		
	28	0.92	19.50	17.66	167.5	137	3,150	175.1		
20	21	0.57	21.60	20.46	117.5	133	2,250	124.9		
	22	0.62	21.60	20.36	127.5	133	2,430	134.9		
	23	0.67	21.60	20.26	137.5	133	2,610	144.9		
	24	0.72	21.60	20.16	147.4	133	2,785	154.8		
	25	0.78	21.60	20.04	159.2	133	3,000	166.6		
	26	0.84	21.60	19.92	170.9	133	3,210	178.4		
	27	0.91	21.60	19.78	184.5	161	3,480	193.4		
	28	0.98	21.60	19.64	198.1	161	3,725	207.0		
24	21	0.63	25.80	24.54	155.4	179	2,975	165.3		
	22	0.68	25.80	24.44	167.4	179	3,190	177.3		
	23	0.73	25.80	24.34	179.4	179	3,410	189.4		
	24	0.79	25.80	24.22	193.7	179	3,665	203.6		
	25	0.85	25.80	24.10	207.9	179	3,920	217.8		
	26	0.92	25.80	23.96	224.4	179	4,220	234.4		
	27	0.99	25.80	23.82	240.8	215	4,550	252.7		
	28	1.07	25.80	23.66	259.4	215	4,885	271.3		

† Heavier thickness classes can be furnished when specified.
‡ Including bell. Calculated weight of pipe rounded off to nearest 5 lb.
§ Including bell. Average weight per foot based on calculated weight of pipe before rounding.

TABLE 6.2

Standard Thickness Classes, Thicknesses, Diameters, and Weights of Bell-and-Spigot Pipe Centrifugally Cast in Metal Molds

Size in.	Thickness Class†	Thickness	OD	ID	Weight of Barrel per Foot	Weight of Bell	Weight Based on 18-ft Laying Length		Weight Based on 20-ft Laying Length	
							Per Length‡	Avg. per Foot§	Per Length‡	Avg. per Foot§
		in.			lb					
3*	22	0.32	3.96	3.32	11.4	11	215	12.0	240	11.9
	23	0.35	3.96	3.26	12.4	11	235	13.0	260	12.9
	24	0.38	3.96	3.20	13.3	11	250	13.9	275	13.8
4	22	0.35	4.80	4.10	15.3	14	290	16.1	320	16.0
	23	0.38	4.80	4.04	16.5	14	310	17.3	345	17.2
	24	0.41	4.80	3.98	17.6	14	330	18.4	365	18.3
	25	0.44	4.80	3.92	18.8	14	350	19.5	390	19.5
6	22	0.38	6.90	6.14	24.3	25	460	25.6	510	25.6
	23	0.41	6.90	6.08	26.1	25	495	27.5	545	27.4
	24	0.44	6.90	6.02	27.9	25	525	29.3	585	29.2
	25	0.48	6.90	5.94	30.2	25	570	31.7	630	31.4
	26	0.52	6.90	5.86	32.5	25	610	33.9	675	33.8
8	22	0.41	9.05	8.23	34.7	41	665	36.9	735	36.8
	23	0.44	9.05	8.17	37.1	41	710	39.4	785	39.2
	24	0.48	9.05	8.09	40.3	41	765	42.6	845	42.4
	25	0.52	9.05	8.01	43.5	41	825	45.8	910	45.6
	26	0.56	9.05	7.93	46.6	41	880	48.9	975	48.6
	27	0.60	9.05	7.85	49.7	41	935	52.0	1,035	51.8
10	22	0.44	11.10	10.22	46.0	54	880	49.0	975	48.7
	23	0.48	11.10	10.14	50.0	54	955	53.0	1,055	52.7
	24	0.52	11.10	10.06	53.9	54	1,025	56.9	1,130	56.6
	25	0.56	11.10	9.98	57.9	54	1,095	60.9	1,210	60.6
	26	0.60	11.10	9.90	61.8	54	1,165	64.8	1,290	64.5
	27	0.65	11.10	9.80	66.6	54	1,255	69.6	1,385	69.3
12	22	0.48	13.20	12.24	59.8	66	1,140	63.4	1,260	63.1
	23	0.52	13.20	12.16	64.6	66	1,230	68.3	1,360	67.9
	24	0.56	13.20	12.08	69.4	66	1,315	73.1	1,455	72.7
	25	0.60	13.20	12.00	74.1	66	1,400	77.8	1,550	77.4
	26	0.65	13.20	11.90	80.0	66	1,505	83.7	1,665	83.3
	27	0.70	13.20	11.80	85.8	74	1,620	89.9	1,790	89.5
	28	0.76	13.20	11.68	92.7	74	1,745	96.8	1,930	96.4

* Pipe of 3-in. size also available in 12-ft laying length. Weight (lb) per length‡ for thickness class 22 is 150; for 23, 160; for 24, 170. Average weight (lb) per foot§ for thickness class 22 is 12.5; for 23, 13.5; for 24, 14.3.
† Heavier thickness classes can be furnished when specified.
‡ Including bell. Calculated weight of pipe rounded off to nearest 5 lb.
§ Including bell. Average weight per foot based on calculated weight of pipe before rounding.

Sec. 6–A1—Talbot Strip Tests

Talbot strips (Fig. 6.1) shall be machined longitudinally from each pipe specimen selected for testing by this method. These Talbot strips may be cut from a part of the ring little stressed in the ring test—that is, near one of the elements marked *a* in the illustration of the ring test (Fig. 6.2). The strips in any case shall be in cross section as indicated in Fig. 6.1—that is, shall have for their width the thickness of the pipe and for their depth 0.50 in. Their length shall be at least 10½ in. These strips shall be tested as beams on supports 10 in. apart with

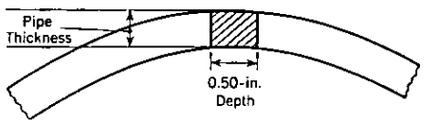

Fig. 6.1. Position From Which Talbot Strip is Cut

loads applied perpendicularly to the machined faces at two points 3⅛ in. from the supports. The breaking load and the deflection shall be observed and recorded.

For purposes of Sec. 6–15 (Foundry Records), Rockwell hardness tests shall be made of the metal at locations as follows: (1) at the outside pipe surface, (2) at the inside pipe surface, and (3) at the approximate middle of the pipe wall. At least three tests at each of the three surfaces shall be made. No test shall exceed Rockwell B-95.

The strip shall be accurately calipered at the point of rupture and the modulus of rupture, R, shall be calculated by the usual beam formula, which for this case reduces to the expression:

$$R = \frac{10W}{td^2}$$

The secant modulus of elasticity, E_s, in pounds per square inch, shall be computed by the formula:

$$E_s = \frac{21.3R}{dy}$$

In the above formulas, R is the modulus of rupture (psi); E_s, the secant modulus of elasticity (psi); W, the breaking load (lb); d, the depth (in.) of the strip (intended to be 0.50 in.); t, the width (in.) of the strip (pipe thickness); and y, the deflection (in.) of the strip at the center at breaking load.

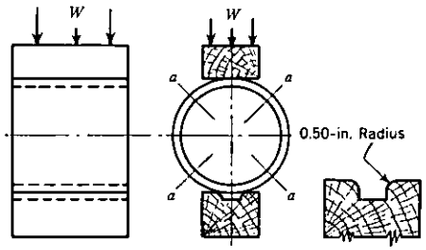

Fig. 6.2. Assembly for Ring Test

Deflection measurements shall be that of the specimen and shall not include any compression of the supports or loading blocks, or backlash or distortion of the testing machine.

Sec. 6–A2—Ring Tests

The maximum length of any ring shall not exceed 12 in.; for pipe 14 in. and larger, the minimum length shall be 10½ in.; for pipe 12 in. and smaller, the minimum length shall be one-half the nominal diameter of the pipe. Each ring shall be tested by the three-edge bearing method as indicated in Fig. 6.2. The lower bearing for the ring shall consist of two strips with vertical sides having their interior top corners rounded to a radius of approximately ½ in. The strips shall be

of hard wood or of metal. If of metal, a piece of fabric or leather approximately $\frac{3}{16}$ in. thick shall be laid over them. They shall be straight and shall be securely fastened to a rigid block with their interior vertical faces the following distances apart:

Pipe Size *in.*	Bearing Strip Spacing *in.*
3–12	$\frac{1}{2}$
14–24	1

The upper bearing shall be a hard wood block, straight and true from end to end. The upper and lower bearings shall extend the full length of the ring. The ring shall be placed symmetrically between the two bearings, and the center of application of the load shall be so placed that the vertical deformation at the two ends of the ring shall be approximately equal. If the ring is not uniform in thickness, it shall be so placed that the thick and thin portions are near the ends of the horizontal diameter.

For purposes of Sec. 6–15 (Foundry Records), a record of the breaking load of each ring tested shall be made. The modulus of rupture is computed from the formula:

$$R = 0.954 \frac{W(d + t)}{bt^2}$$

in which R is the modulus of rupture (psi); W, the breaking load (lb); d, the average inside diameter (in.) of the ring; t, the average thickness (in.) of the metal along the line of fracture; and b, the length (in.) of the ring.

Sec. 6–A3—Full-Length Bursting Tests

The bursting tensile strength shall be determined by testing full-length pipe (less the amount cut off for ring and strip test specimens) to destruction by hydraulic pressure. Bells may be removed to facilitate testing. A suitable means for holding the end thrust shall be used which will not subject the pipe to endwise tension or compression or other parasitic stresses. A calibrated pressure gage shall be used for determining the bursting pressure. This gage shall be connected to the interior of the test pipe by a separate connection from that which supplies water for the test. The unit tensile strength in bursting shall be obtained by the use of the formula:

$$S = \frac{Pd}{2t}$$

in which S is the bursting tensile strength (psi) of the iron; P, the internal pressure (psi) at bursting; d, the average inside diameter (in.) of the pipe; and t, the minimum average thickness (in.) of the pipe along the principal line of break. Measurements of thickness shall be taken along the principal line of break at 1-ft intervals.

The minimum average thickness along the principal line of break shall be obtained by averaging the measurements at the thinnest section at a weight of two and at the adjacent sections on each side at a weight of one each; or, if the thinnest section is at the end of the break, by averaging this thinnest-section measurement at a weight of two and the measurements of the adjacent section and the next section at a weight of one each.

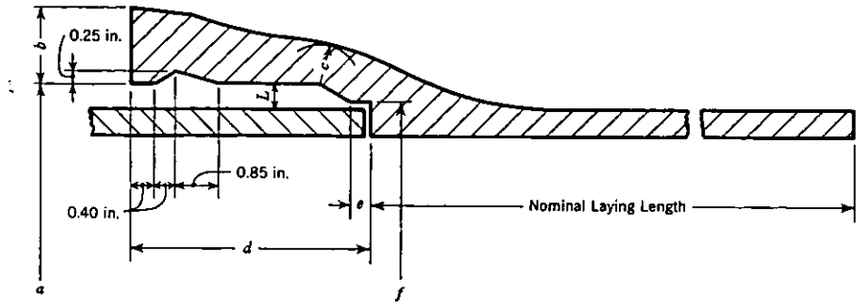

TABLE 6.1

Standard Bell-and-Spigot Joint Dimensions for Pipe Centrifugally Cast in Metal Molds

Size	Pipe Thickness From	Pipe Thickness To	Pipe OD*†	Socket Diam.* *a*	Dimensions of Bells: Thickness of Joint *L*	Socket Depth *d*	Centering Shoulder Depth *e*	Centering Shoulder ID* *f*	*b*‡	*c*‡	Weigh of Bell *lb*
	in.										
3	0.32	0.38	3.96	4.76	0.40	3.30	0.30	4.10	1.02	0.41	11
4	0.35	0.44	4.80	5.60	0.40	3.30	0.30	4.94	1.06	0.47	14
6	0.38	0.52	6.90	7.70	0.40	3.88	0.38	7.06	1.10	0.55	25
8	0.41	0.60	9.05	9.85	0.40	4.38	0.38	9.21	1.28	0.64	41
10	0.44	0.65	11.10	11.90	0.40	4.38	0.38	11.28	1.38	0.69	54
12	0.48	0.65	13.20	14.00	0.40	4.38	0.38	13.38	1.42	0.71	66
	0.70	0.76	13.20	14.00	0.40	4.38	0.38	13.38	1.62	0.81	74
14	0.48	0.69	15.30	16.10	0.40	4.50	0.50	15.52	1.46	0.73	78
	0.75	0.81	15.30	16.10	0.40	4.50	0.50	15.52	1.70	0.88	97
16	0.50	0.73	17.40	18.40	0.50	4.50	0.50	17.62	1.54	0.77	96
	0.79	0.85	17.40	18.40	0.50	4.50	0.50	17.62	1.75	0.93	114
18	0.54	0.79	19.50	20.50	0.50	4.50	0.50	19.72	1.64	0.82	114
	0.85	0.92	19.50	20.50	0.50	4.50	0.50	19.72	1.85	0.99	137
20	0.57	0.84	21.60	22.60	0.50	4.50	0.50	21.82	1.74	0.87	133
	0.91	0.98	21.60	22.60	0.50	4.50	0.50	21.82	1.95	1.05	161
24	0.63	0.92	25.80	26.80	0.50	4.50	0.50	26.02	1.94	0.97	179
	0.99	1.07	25.80	26.80	0.50	4.50	0.50	26.02	2.15	1.18	215

* Tolerances for outside diameter, socket diameter *a*, and centering shoulder inside diameter *f* shall be ±0.06 in. or sizes 3–12 in., and ±0.08 in. for sizes 14–24 in.

† For pipe with outside diameters other than the standard diameters shown in this table, consult the manufacturer.

‡ For tolerances, see Sec. 6–7.2.

ASA A21.8
(AWWA C108)

AMERICAN STANDARD FOR CAST-IRON PIPE CENTRIFUGALLY CAST IN SAND-LINED MOLDS, FOR WATER OR OTHER LIQUIDS

ASA A21.8

UDC 621.774.1

ASA A21.8–1962
(AWWA C108–62)
Revision of
A21.8–1953
(AWWA C108–53)

AMERICAN STANDARD

for

CAST-IRON PIPE CENTRIFUGALLY CAST IN SAND-LINED MOLDS, FOR WATER OR OTHER LIQUIDS

PUBLISHED BY AMERICAN WATER WORKS ASSOCIATION, INC.

SPONSORS

American Gas Association
American Society for Testing and Materials
American Water Works Association
New England Water Works Association

Revised Edition Approved by American Standards Association Feb. 26, 1962

AMERICAN WATER WORKS ASSOCIATION
Incorporated
2 Park Avenue, New York, N.Y. 10016

4P—17M—12/65

Table of Contents

Standard—pp. 1–5

	SEC.
Scope	8–1
Definitions	8–2
General Requirements	8–3
Inspection and Certification by Manufacturer	8–4
Inspection by Purchaser	8–5
Delivery and Acceptance	8–6
Tolerance or Permitted Variations	8–7
Coatings and Linings	8–8
Hydrostatic Test	8–9
Marking Pipe	8–10
Weighing	8–11
Acceptance Tests	8–12
Ring Tests and Full-Length Bursting Tests	8–13
Chemical Analyses	8–14
Foundry Records	8–15
Additional Tests Required by Purchaser	8–16
Defective Specimens and Retests	8–17
Rejection of Pipe	8–18
Determining Rejection	8–19

Appendix—pp. 6–9

	SEC.
Talbot Strip Tests	8–A1
Ring Tests	8–A2
Full-Length Bursting Tests	8–A3
Test Bars	8–A4

Tables—pp. 10–27

Table 8.1—Standard Bell-and-Spigot Joint Dimensions for Pipe Centrifugally Cast in Sand-Lined Molds

Table 8.2—Standard Thickness Classes, Thicknesses, Diameters, and Weights of Bell-and-Spigot Pipe Centrifugally Cast in Sand-Lined Molds

Table 8.3—Standard Thicknesses, Diameters, and Weights of Bell-and-Spigot Pipe Centrifugally Cast in Sand-Lined Molds

Table 8.4—Standard Thickness of Pipe Centrifugally Cast in Sand-Lined Molds

Table 8.5—Standard Mechanical-Joint Dimensions for Pipe Centrifugally Cast in Sand-Lined Molds

Table 8.6—Standard Thickness Classes, Thicknesses, Diameters, and Weights of Mechanical-Joint Pipe Centrifugally Cast in Sand-Lined Molds

Table 8.7—Standard Thicknesses, Diameters, and Weights of Mechanical-Joint Pipe Centrifugally Cast in Sand-Lined Molds

---

Users of this document should refer to ASA A21.1 (AWWA C101) for complete information concerning the conditions that various thicknesses of pipe are designed to meet.

© Copyright 1962 by the American Water Works Assn.
as part of the March 1962 Journal AWWA
Made in USA

Foreword

This foreword is not a part of ASA A21.8 (AWWA C108)

On Sep. 10 1902, the NEWWA adopted a "Standard Specification for Cast Iron Pipe and Special Castings." This covered bell-and-spigot pit-cast pipe and fittings of ten thickness classes with the class thicknesses based on allowable heads varying by 50 ft.

On May 12, 1908, AWWA adopted a "Standard Specification for Cast-Iron Pipe and Special Castings." This covered bell-and-spigot pit-cast pipe and fittings of eight classes, A–H, with allowable working pressures varying by 100-ft head increments; Class A for 100-ft head to Class H for 800-ft head. Dimensions and weights were given for pipe and fittings.

In 1926, the ASA A21 Sectional Committee on Cast Iron Pipe and Fittings was organized. The sponsor societies were the American Gas Association, the American Society for Testing and Materials, the American Water Works Association, and the New England Water Works Association. Committee A21 was assigned the following scope:

> Unification of specifications for cast-iron pipe, including materials; dimensions; pressure ratings; methods of manufacture (including such new developments as centrifugal casting) insofar as they may be necessary to secure satisfactory specifications; elimination of unnecessary sizes and varieties; consideration of the possibility of developing a coordinated scheme of metallic pipe and fittings applicable to all common mediums; and methods of making up joints insofar as they are determining as to the dimensional design of cast-iron pipe.
>
> The types of cast-iron pipe [are] to include bell-and-spigot pipe, flanged pipe, flanged and bell mouth fittings and wall castings, pipe elbows, tees, Y's, return bends, and other fittings not now included in standard lists; cast-iron pipe threaded for flanges or couplings. The standardization is not to include methods of installing pipe and similar matters, except as to the making up of joints in its relationship to the dimensional standardization of pipe and fittings, as noted above.

The sectional committee made many tests of pipe and fittings; these included tests of pipe under combined earth load and internal pressures on which the design of pipe thicknesses is based, corrosion tests, hydraulic friction loss in fittings, and bursting tests of pipe and fittings. After exhaustive study of the test results and other research work, the committee in 1939 issued the A21.1 "American Standard Practice Manual for the Computation of Strength and Thickness of Cast Iron Pipe." This design method is applicable to pipe of any strength iron, although the pipe specifications are written for 11/31-strength iron for pit-cast pipe and 18/40-strength iron for centrifugally cast pipe.

Discussion and interpretations * † of

* Wiggin, T. H.; Enger, M. L.; & Schlick, W. J. A Proposed New Method for Determining Barrel Thicknesses of Cast-Iron Pipe. *Jour. AWWA*, 31:841 (May 1939).

† Moore, W. D. Discussion of the New Law of Design of Cast-Iron Pipe. *Jour. AWWA*, 31:1655 (Oct. 1939).

the ASA method of design of cast-iron pipe were published in 1939 and presented to AWWA and the American Gas Association. As a result of these publications and general acceptance of the A21.1 manual, a substantial volume of cast-iron pipe was designed by the new method and furnished to manufacturers' standards between 1939 and 1953. Work on standards for centrifugally cast pipe was started after the design was finalized in 1939, but with the advent of war and other causes they were not formally issued until 1953.

In 1958 the A21 sectional committee was reorganized. Subcommittees were established to study each group of standards in accordance with the review and revision policy of ASA.

Subcommittee No. 1 on pipe specifications was organized with the following scope:

> The scope of the committee activity shall include an examination of all present A21 standards for pipe to determine what is needed to bring these up to date. The examination shall include A21.1, A21.2, A21.3, A21.6, A21.7, A21.8, and A21.9, as well as any other matters pertaining to pipe standards.

This subcommittee completed its study of A21.8–1953 and submitted a proposed revision to the A21 sectional committee in 1960.

Major Revisions

The major revisions to the standard are:

Scope. Pipe with mechanical joints are added, as this joint is widely used for water service. Push-on joints are now widely used for water service, and are made to manufacturers' standards. Push-on-joint pipe all have the standard spigot diameters and the weights of the bell and spigot pipe are applicable.

Pipe shorter than nominal lengths. Ten per cent of the pipe on an order is allowed to be 24 in. less than the nominal laying length, as in the previous standard. An additional 10 per cent is allowed to be 3 in. less than the nominal laying lengths.

Weight. No major change is made in weight requirements except to tighten the standard somewhat by requiring the 2 per cent underweight limit to apply not only to any order of 25 tons or more, but also to any one size of 25 tons or more included on any order.

Coating and lining. A minimum of 1-mil thickness of either coal tar or asphalt base bituminous coating is required for either the inside or outside of coated pipe. Cement lining is recommended in accordance with ASA A21.4 (AWWA C104) for all pipe. The previous standard had no requirement for coatings, merely stating it shall be specified at the time of purchase.

Hydrostatic test. A 500-psi hydrostatic test is required for all pipe 24 in. and smaller. Also, the full test pressure must be on the pipe for 10 sec. Suitable control and recording devices must be provided to insure compliance with these requirements. The previous standard permitted a 400-psi test for 14–24-in. pipe of Class 23 and thinner wall thicknesses.

After considerable study, the committee agreed that the requirement of the previous standard for 30 sec under the test pressure was not necessary and that 10 sec is adequate.

Physical test requirements. The only change is to require bursting tests and ring tests from specified grouping of pipe sizes each month.

TABLE 8.7—(*contd.*)

Standard Thicknesses, Diameters, and Weights of Mechanical-Joint Pipe Centrifugally Cast in Sand-Lined Molds

These thicknesses and weights are for pipe laid without blocks, on flat-bottom trench, with tamped backfill (Laying Condition B), under 5 ft of cover. For other conditions see Table 8.4 and 8.6 hereof and ASA A21.1 (AWWA C101).

Size	Thickness	OD	Weight Based on 16-ft Laying Length		Weight Based on 16½-ft Laying Length		Weight Based on 18-ft Laying Length		Weight Based on 20-ft Laying Length	
			Per Length†	Avg. per Foot‡	Per Length†	Avg. per Foot‡	Per Length†	Avg. per Foot‡	Per Length†	Avg. per Foot‡
in.			*lb*							
Working Pressure 200 psi—462 ft Head										
3*	0.32	3.96	195	12.2	200	12.1	215	12.0		
4	0.35	4.80	260	16.4	270	16.3	290	16.2		
6	0.38	6.90	410	25.7	420	25.6	460	25.5	510	25.4
8	0.41	9.05	585	36.7	605	36.6	655	36.4	725	36.2
10	0.44	11.10	775	48.5	800	48.4	870	48.2	960	48.0
12	0.48	13.20	1,005	62.9	1,035	62.8	1,125	62.6	1,245	62.3
14	0.55	15.30	1,350	84.4	1,390	84.2			1,670	83.4
16	0.58	17.40	1,625	101.5	1,670	101.3			2,005	100.3
18	0.63	19.50	1,975	123.5	2,035	123.3			2,445	122.2
20	0.67	21.60	2,335	145.9	2,405	145.7			2,885	144.2
24	0.79	25.80	3,275	204.8	3,375	204.4			4,050	202.6
30	0.92	32.00	4,770	298.1	4,910	297.6				
36	1.02	38.30	6,360	397.4						
42	1.13	44.50	8,195	512.3						
48	1.23	50.80	10,205	637.9						
Working Pressure 250 psi—577 ft Head										
3*	0.32	3.96	195	12.2	200	12.1	215	12.0		
4	0.35	4.80	260	16.4	270	16.3	290	16.2		
6	0.38	6.90	410	25.7	420	25.6	460	25.5	510	25.4
8	0.41	9.05	585	36.7	605	36.6	655	36.4	725	36.2
10	0.44	11.10	775	48.5	800	48.4	870	48.2	960	48.0
12	0.52	13.20	1,085	67.7	1,115	67.6	1,215	67.4	1,340	67.1
14	0.59	15.30	1,440	90.0	1,480	89.8			1,780	89.0
16	0.63	17.40	1,755	109.6	1,805	109.4			2,165	108.3
18	0.68	19.50	2,120	132.5	2,180	132.2			2,620	131.0
20	0.72	21.60	2,490	155.7	2,565	155.5			3,080	154.1
24	0.79	25.80	3,275	204.8	3,375	204.4			4,050	202.6
30	0.99	32.00	5,100	318.7	5,250	318.2				
36	1.10	38.30	6,815	425.8						
42	1.22	44.50	8,790	549.5						
48	1.33	50.80	10,965	685.2						
Working Pressure 300 psi—693 ft Head										
3*	0.32	3.96	195	12.2	200	12.1	215	12.0		
4	0.35	4.80	260	16.4	270	16.3	290	16.2		
6	0.38	6.90	410	25.7	420	25.6	460	25.5	510	25.4
8	0.41	9.05	585	36.7	605	36.6	655	36.4	725	36.2
10	0.48	11.10	840	52.5	865	52.4	940	52.2	1,040	52.0
12	0.52	13.20	1,085	67.7	1,115	67.6	1,215	67.4	1,340	67.1
14	0.59	15.30	1,440	90.0	1,480	89.8			1,780	89.0
16	0.68	17.40	1,875	117.3	1,935	117.2			2,325	116.2
18	0.73	19.50	2,260	141.4	2,330	141.1			2,800	140.0
20	0.78	21.60	2,680	167.6	2,760	167.3			3,320	165.9
24	0.85	25.80	3,505	219.0	3,605	218.6			4,335	216.8
Working Pressure 350 psi—808 ft Head										
3*	0.32	3.96	195	12.2	200	12.1	215	12.0		
4	0.35	4.80	260	16.4	270	16.3	290	16.2		
6	0.38	6.90	410	25.7	420	25.6	460	25.5	510	25.4
8	0.41	9.05	585	36.7	605	36.6	655	36.4	725	36.2
10	0.52	11.10	900	56.4	930	56.3	1,010	56.1	1,120	55.9
12	0.56	13.20	1,160	72.5	1,195	72.4	1,300	72.2	1,440	71.9
14	0.64	15.30	1,550	96.9	1,595	96.7			1,920	95.9
16	0.68	17.40	1,875	117.3	1,935	117.2			2,325	116.2
18	0.79	19.50	2,430	152.0	2,505	151.7			3,010	150.6
20	0.84	21.60	2,870	179.3	2,955	179.0			3,550	177.6
24	0.92	25.80	3,765	235.4	3,880	235.1			4,665	233.2

* Pipe of 3-in. size also available in 12-ft laying length. Weight per length† is 150 lb; average weight‡ per foot 12.3 lb for all working pressures and heads.

† Including bell. Calculated weight of pipe rounded off to nearest 5 lb.

‡ Including bell. Average weight per foot based on calculated weight of pipe before rounding.

TABLE 8.7

Standard Thicknesses, Diameters, and Weights of Mechanical-Joint Pipe Centrifugally Cast in Sand-Lined Molds

These thicknesses and weights are for pipe laid without blocks, on flat-bottom trench, with tamped backfill (Laying Condition B), under 5 ft of cover. For other conditions see Table 8.4 and 8.6 hereof and ASA A21.1 (AWWA C101).

Size	Thickness	OD	Weight Based on 16-ft Laying Length		Weight Based on 16½-ft Laying Length		Weight Based on 18-ft Laying Length		Weight Based on 20-ft Laying Length	
			Per Length†	Avg. per Foot‡	Per Length†	Avg. per Foot‡	Per Length†	Avg. per Foot‡	Per Length†	Avg. per Foot‡
in.			*lb*							
Working Pressure 50 psi—115 ft Head										
3*	0.32	3.96	195	12.2	200	12.1	215	12.0		
4	0.35	4.80	260	16.4	270	16.3	290	16.2		
6	0.38	6.90	410	25.7	420	25.6	460	25.5	510	25.4
8	0.41	9.05	585	36.7	605	36.6	655	36.4	725	36.2
10	0.44	11.10	775	48.5	800	48.4	870	48.2	960	48.0
12	0.48	13.20	1,005	62.9	1,035	62.8	1,125	62.6	1,245	62.3
14	0.48	15.30	1,195	74.6	1,230	74.4			1,470	73.6
16	0.54	17.40	1,520	95.0	1,565	94.9			1,880	94.0
18	0.54	19.50	1,720	107.5	1,770	107.2			2,120	106.0
20	0.57	21.60	2,015	125.9	2,075	125.7			2,485	124.2
24	0.63	25.80	2,665	166.5	2,740	166.1			3,285	164.2
30	0.79	32.00	4,150	259.5	4,275	259.0				
36	0.87	38.30	5,500	343.9						
42	0.97	44.50	7,130	445.7						
48	1.06	50.80	8,915	557.1						
Working Pressure 100 psi—231 ft Head										
3*	0.32	3.96	195	12.2	200	12.1	215	12.0		
4	0.35	4.80	260	16.4	270	16.3	290	16.2		
6	0.38	6.90	410	25.7	420	25.6	460	25.5	510	25.4
8	0.41	9.05	585	36.7	605	36.6	655	36.4	725	36.2
10	0.44	11.10	775	48.5	800	48.4	870	48.2	960	48.0
12	0.48	13.20	1,005	62.9	1,035	62.8	1,125	62.6	1,245	62.3
14	0.51	15.30	1,260	78.8	1,295	78.6			1,555	77.8
16	0.54	17.40	1,520	95.0	1,565	94.9			1,880	94.0
18	0.58	19.50	1,835	114.7	1,890	114.4			2,265	113.2
20	0.62	21.60	2,175	135.9	2,240	135.7			2,685	134.2
24	0.68	25.80	2,855	178.5	2,940	178.1			3,525	176.2
30	0.79	32.00	4,150	259.5	4,275	259.0				
36	0.87	38.30	5,500	343.9						
42	0.97	44.50	7,130	445.7						
48	1.06	50.80	8,915	557.1						
Working Pressure 150 psi—346 ft Head										
3*	0.32	3.96	195	12.2	200	12.1	215	12.0		
4	0.35	4.80	260	16.4	270	16.3	290	16.2		
6	0.38	6.90	410	25.7	420	25.6	460	25.5	510	25.4
8	0.41	9.05	585	36.7	605	36.6	655	36.4	725	36.2
10	0.44	11.10	775	48.5	800	48.4	870	48.2	960	48.0
12	0.48	13.20	1,005	62.9	1,035	62.8	1,125	62.6	1,245	62.3
14	0.51	15.30	1,260	78.8	1,295	78.6			1,555	77.8
16	0.54	17.40	1,520	95.0	1,565	94.9			1,880	94.0
18	0.58	19.50	1,835	114.7	1,890	114.4			2,265	113.2
20	0.62	21.60	2,175	135.9	2,240	135.7			2,685	134.2
24	0.73	25.80	3,045	190.4	3,135	190.1			3,765	188.2
30	0.85	32.00	4,435	277.3	4,565	276.8				
36	0.94	38.30	5,900	368.9						
42	1.05	44.50	7,665	479.1						
48	1.14	50.80	9,525	595.2						

* Pipe of 3-in. size also available in 12-ft laying length. Weight per length† is 150 lb; average weight‡ per foot is 12.3 lb for all working pressures and heads.
† Including bell. Calculated weight of pipe rounded off to nearest 5 lb.
‡ Including bell. Average weight per foot based on calculated weight of pipe before rounding.

Appendix. The only change is to delete the formula for calculating the modulus of elasticity of the ring, as this is not and has never been specified or required in the specification.

Tables. Mechanical-joint and push-on-joint pipe have only one outside diameter. Since their general acceptance by the water industry, the use of bell-and-spigot pipe to a different outside diameter has decreased to a very small percentage. For this standard a single outside diameter for each size of pipe has been selected in the bell-and-spigot tables. This outside diameter is the smaller of the two diameters shown in the previous standard for sizes 4–24 in.

Tables for mechanical-joint pipe are included showing dimensions, thicknesses, and weights in the same format as the bell-and-spigot tables.

All tables are revised to include the pipe lengths presently being produced.

Options

This standard includes certain options which, if desired, must be specified on the purchase order. Also, a number of items must be specified to describe completely the pipe required. The following summarizes these details and available options, and lists the sections of the standard where they can be found:

Pipe Detail and Option	*Reference*
Size, joint type, thickness or pressure class, and laying length	Tables
Special joints	Sec. 8–3.1.
Certification by manufacturer	Sec. 8–4
Inspection by purchaser	Sec. 8–5
Cement lining	Sec. 8–8.2.
Special coatings and linings	Sec. 8–8.2.
Special marking on pipe	Sec. 8–10
Written transcripts of foundry records	Sec. 8–15
Special tests	Sec. 8–16
Bell-and-spigot with special outside diameter	Table 8.1 (Note)

Committee Personnel

Subcommittee No. 1, which reviewed A21.8–1953 and developed this revision had the following personnel at that time:

J. Thompson Vann, *Chm.*
Edwin B. Cobb, *Vice-Chm.*

User Members	*Producer Members*
Frank E. Dolson	Louis A. Camerota
Richmond C. Holcombe	Carl A. Henrikson
Rolf H. Jensen	Charles C. Salvage
Robert C. Kauffman	Sidney P. Teague
Loring E. Tabor	

The A21 sectional committee on cast-iron pipe and fittings, which reviewed and approved this A21.8 revised standard, had the following personnel at the time of approval.

Edwin B. Cobb, *Chm.*
Herbert W. Stuart, *Vice-Chm.*
Raymond J. Faust, *Secy.*

Organization Represented	*Name of Representative*
American Gas Association	Richmond C. Holcombe
American Society of Civil Engineers	K. W. Henderson
American Society of Mechanical Engineers	Louis R. Howson
American Society for Testing and Materials	Harry P. Hagedorn
American Water Works Association	S. Logan Kerr
Cast Iron Pipe Research Association	Thomas F. Wolfe Herbert W. Stuart J. Thompson Vann
Manufacturers' Standardization Society of the Valve and Fittings Industry	G. A. MacDonald
New England Water Works Association	Edwin B. Cobb
Standardization Division, General Services Administration	W. T. Thomasson
Member at Large	Rolf H. Jensen

TABLE 8.6—(*cont'd.*)

Standard Thickness Classes, Thicknesses, Diameters, and Weights of Mechanical-Joint Pipe Centrifugally Cast in Sand-Lined Molds

Size in.	Thickness Class†	Thickness	OD	ID	Weight of Barrel per Foot	Weight of Bell	Weight Based on 16-ft Laying Length		Weight Based on 16½-ft Laying Length		Weight Based on 18-ft Laying Length		Weight Based on 20-ft Laying Length	
		in.			lb		Per Length‡	Avg. per Foot§	Per Length‡	Avg. per Foot§	Per Length‡	Avg. per Foot§	Per Length‡	Avg. per Foot§
36	21	0.81	38.30	36.68	297.7	395	5,160	322.4						
	22	0.87	38.30	36.56	319.2	395	5,500	343.9						
	23	0.94	38.30	36.42	344.2	395	5,900	368.9						
	24	1.02	38.30	36.26	372.7	395	6,360	397.4						
	25	1.10	38.30	36.10	401.1	395	6,815	425.8						
	26	1.19	38.30	35.92	432.9	395	7,320	457.6						
	27	1.29	38.30	35.72	468.0	395	7,885	492.7						
	28	1.39	38.30	35.52	502.9	395	8,440	527.6						
	29	1.50	38.30	35.30	541.1	395	9,055	565.8						
42	21	0.90	44.50	42.70	384.6	510	6,665	416.5						
	22	0.97	44.50	42.56	413.9	510	7,130	445.7						
	23	1.05	44.50	42.40	447.2	510	7,665	479.1						
	24	1.13	44.50	42.24	480.4	510	8,195	512.3						
	25	1.22	44.50	42.06	517.6	510	8,790	549.5						
	26	1.32	44.50	41.86	558.7	510	9,450	590.6						
	27	1.43	44.50	41.64	603.7	510	10,170	635.6						
	28	1.54	44.50	41.42	648.5	510	10,885	680.4						
	29	1.66	44.50	41.18	697.0	510	11,660	728.9						
48	21	0.98	50.80	48.84	478.6	645	8,305	519.0						
	22	1.06	50.80	48.68	516.8	645	8,915	557.1						
	23	1.14	50.80	48.52	554.9	645	9,525	595.2						
	24	1.23	50.80	48.34	597.6	645	10,205	637.9						
	25	1.33	50.80	48.14	644.9	645	10,965	685.2						
	26	1.44	50.80	47.92	696.7	645	11,790	737.0						
	27	1.56	50.80	47.68	752.9	645	12,690	793.2						
	28	1.68	50.80	47.44	808.9	645	13,585	849.2						
	29	1.81	50.80	47.18	869.1	645	14,550	909.4						

† Heavier thickness classes can be furnished when specified.
‡ Including bell. Calculated weight of pipe rounded off to nearest 5 lb.
§ Including bell. Average weight per foot based on calculated weight of pipe before rounding.

TABLE 8.6—(*contd.*)

Standard Thickness Classes, Thicknesses, Diameters, and Weights of Mechanical-Joint Pipe Centrifugally Cast in Sand-Lined Molds

Size in.	Thickness Class†	Thickness	OD	ID	Weight of Barrel per Foot	Weight of Bell	Weight Based on 16-ft Laying Length		Weight Based on 16½-ft Laying Length		Weight Based on 18-ft Laying Length		Weight Based on 20-ft Laying Length	
							Per Length‡	Avg. per Foot§	Per Length‡	Avg. per Foot§	Per Length‡	Avg. per Foot§	Per Length‡	Avg. per Foot§
		in.			lb									
20	21	0.57	21.60	20.46	117.5	134	2,015	125.9	2,075	125.7			2,485	124.2
	22	0.62	21.60	20.36	127.5	134	2,175	135.9	2,240	135.7			2,685	134.2
	23	0.67	21.60	20.26	137.5	134	2,335	145.9	2,405	145.7			2,885	144.2
	24	0.72	21.60	20.16	147.4	134	2,490	155.7	2,565	155.5			3,080	154.1
	25	0.78	21.60	20.04	159.2	134	2,680	167.6	2,760	167.3			3,320	165.9
	26	0.84	21.60	19.92	170.9	134	2,870	179.3	2,955	179.0			3,550	177.6
	27	0.91	21.60	19.78	184.5	134	3,085	192.9	3,180	192.6			3,825	191.2
	28	0.98	21.60	19.64	198.1	134	3,305	206.5	3,405	206.3			4,095	204.8
24	21	0.63	25.80	24.54	155.4	177	2,665	166.5	2,740	166.1			3,285	164.2
	22	0.68	25.80	24.44	167.4	177	2,855	178.5	2,940	178.1			3,525	176.2
	23	0.73	25.80	24.34	179.4	177	3,045	190.4	3,135	190.1			3,765	188.2
	24	0.79	25.80	24.22	193.7	177	3,275	204.8	3,375	204.4			4,050	202.6
	25	0.85	25.80	24.10	207.9	177	3,505	219.0	3,605	218.6			4,335	216.8
	26	0.92	25.80	23.96	224.4	177	3,765	235.4	3,880	235.1			4,665	233.2
	27	0.99	25.80	23.82	240.8	177	4,030	251.9	4,150	251.5			4,995	249.7
	28	1.07	25.80	23.66	259.4	177	4,325	270.4	4,455	270.1			5,365	268.2
30	21	0.73	32.00	30.54	223.7	285	3,865	241.5	3,975	241.0				
	22	0.79	32.00	30.42	241.7	285	4,150	259.5	4,275	259.0				
	23	0.85	32.00	30.30	259.5	285	4,435	277.3	4,565	276.8				
	24	0.92	32.00	30.16	280.3	285	4,770	298.1	4,910	297.6				
	25	0.99	32.00	30.02	300.9	285	5,100	318.7	5,250	318.2				
	26	1.07	32.00	29.86	324.4	285	5,475	342.2	5,640	341.7				
	27	1.16	32.00	29.68	350.7	285	5,895	368.5	6,070	368.0				
	28	1.25	32.00	29.50	376.8	285	6,315	394.6	6,500	394.0				
	29	1.35	32.00	29.30	405.6	285	6,775	423.4	6,975	422.8				

† Heavier thickness classes can be furnished when specified.
‡ Including bell. Calculated weight of pipe rounded off to nearest 5 lb.
§ Including bell. Average weight per foot based on calculated weight of pipe before rounding.

UDC 621.774.1

ASA A21.8-1962
(AWWA C108-62)
Revision of
A21.8-1953
(AWWA C108-53)

American Standard for

Cast-Iron Pipe Centrifugally Cast in Sand-Lined Molds, for Water or Other Liquids

Sec. 8-1—Scope

This standard covers 3–48-in. cast iron pipe centrifugally cast in sand-lined molds. Characteristics of such pipe with bell-and-spigot joints and mechanical joints are given in the tables. This standard may be used for pipe with such other types of joints as may be agreed upon at the time of purchase.

Sec. 8-2—Definitions

Under this standard, the following definitions shall apply:

8-2.1. *Purchaser.* The party entering into a contract or agreement to purchase pipe according to this standard.

8-2.2. *Manufacturer.* The party that produces the pipe.

8-2.3. *Inspector.* The representative of the purchaser, authorized to inspect in behalf of the purchaser to determine whether or not the pipe meet this standard.

8-2.4. *Heat.* The period during which pipe are cast and the melting unit is operated continuously.

8-2.5. *Bell-and-spigot joint.* The poured or calked joint as detailed in Table 8.1.

8-2.6. *Mechanical Joint.* The gasketed and bolted joint as detailed in Table 8.5.

Sec. 8-3—General Requirements

8-3.1. Pipe with bell-and-spigot joints and mechanical joints shall conform to the dimensions and weights shown in the tables in this standard, unless otherwise agreed upon at the time of purchase. The mechanical joints shall also conform in all respects to ASA A21.11 (AWWA C111), of latest revision. Pipe with other types of joints shall comply with the joint dimensions and weights agreed upon, but in all other respects shall fulfill the requirements hereinafter given.

8-3.2. The nominal laying length of the pipe shall be as shown in the tables. A maximum of 10 per cent of the total number of pipe of each size of an order may be furnished as much as 24 in. shorter than the nominal laying length. An additional 10 per cent may be furnished as much as 3 in. shorter than nominal laying length.

Sec. 8-4—Inspection and Certification by Manufacturer

The manufacturer shall establish the necessary quality control and inspection practice to assure compliance with this standard.

The manufacturer shall, if required on the purchase order, furnish a sworn statement that the inspection and all of the specified tests have been made

and the results thereof comply with the requirements of this standard.

Sec. 8–5—Inspection by Purchaser

8–5.1. When the purchaser desires to inspect pipe at the manufacturer's plant, the purchaser shall so specify on the purchase order, stating the conditions (such as time and extent of the inspection) under which the inspection shall be made.

8–5.2. The inspector shall have free access to those parts of the manufacturer's plant which are necessary to assure compliance with this specification. The manufacturer shall make available for the inspector's use such gages as are necessary for inspection. The manufacturer shall provide the inspector with such handling assistance as necessary.

Sec. 8–6—Delivery and Acceptance

All pipe and accessories shall comply with this standard. Pipe and accessories not complying with this standard shall be replaced by the manufacturer at the agreed point of delivery. The manufacturer shall not be liable for shortages or damaged pipe after acceptance at the agreed point of delivery except as recorded on the delivery receipt or similar document by the carrier's agent.

Sec. 8–7—Tolerances or Permitted Variations

8–7.1. *Dimensions.* Pipe and accessories shall be gaged at sufficiently frequent intervals to determine whether or not they comply with the dimensions listed in the tables shown in this standard. The inside of the sockets and outside of the spigot ends shall be tested with circular gages.

8–7.2. *Thickness.* Tolerances below the standard thicknesses of pipe and bell shall not be more than those shown below:

Pipe Size *in.*	Minus Tolerance *in.*
3– 8	0.05
10–12	0.06
14–24	0.08
30–48	0.10

NOTE: An additional tolerance of 0.02 in. shall be permitted over areas not exceeding 8 in. in any direction.

8–7.3. *Weight.* The weight of any single pipe shall not be less than the nominal tabulated weight by more than 5 per cent for pipe 12 in. or smaller in diameter, nor by more than 4 per cent for pipe larger than 12 in. in diameter. The total weight of any order of 25 tons or more shall not be more than 2 per cent under the total nominal weight. When an order includes 25 tons or more of one size pipe, this one size shall not be more than 2 per cent under the total nominal weight of this size. An order, as used in this section, is defined as including all pipe purchased under a single contract or a single release for shipment under a standing contract. Unless otherwise specified on the purchase order, a ton shall be 2,000 lb avoirdupois.

Sec. 8–8—Coatings and Linings

8–8.1. *Standard outside coating.* The standard outside coating for general use under all normal conditions shall be a bituminous coating of either coal tar or asphalt base approximately 1 mil thick. The standard coating shall be applied to the outside of all pipe unless otherwise specified. The finished coating shall be continuous, smooth, neither brittle when cold nor sticky when exposed to the sun, and shall be strongly adherent to the pipe.

TABLE 8.6—(*contd.*)

Standard Thickness Classes, Thicknesses, Diameters, and Weights of Mechanical-Joint Pipe Centrifugally Cast in Sand-Lined Molds

Size *in.*	Thickness Class†	Thickness	OD	ID	Weight of Barrel per Foot	Weight of Bell	Weight Based on 16-ft Laying Length		Weight Based on 16½-ft Laying Length		Weight Based on 18-ft Laying Length		Weight Based on 20-ft Laying Length	
		in.					Per Length‡	Avg. per Foot§	Per Length‡	Avg. per Foot§	Per Length‡	Avg. per Foot§	Per Length‡	Avg. per Foot§
						lb								
14	21	0.48	15.30	14.34	69.7	78	1,195	74.6	1,230	74.4			1,470	73.6
	22	0.51	15.30	14.28	73.9	78	1,260	78.8	1,295	78.6			1,555	77.8
	23	0.55	15.30	14.20	79.5	78	1,350	84.4	1,390	84.2			1,670	83.4
	24	0.59	15.30	14.12	85.1	78	1,440	90.0	1,480	89.8			1,780	89.0
	25	0.64	15.30	14.02	92.0	78	1,550	96.9	1,595	96.7			1,920	95.9
	26	0.69	15.30	13.92	98.8	78	1,660	103.7	1,710	103.5			2,055	102.7
	27	0.75	15.30	13.80	107.0	78	1,790	111.9	1,845	111.7			2,220	110.9
	28	0.81	15.30	13.68	115.0	78	1,920	119.9	1,975	119.7			2,380	118.9
16	21	0.50	17.40	16.40	82.8	95	1,420	88.7	1,460	88.6			1,750	87.6
	22	0.54	17.40	16.32	89.2	95	1,520	95.0	1,565	94.9			1,880	94.0
	23	0.58	17.40	16.24	95.6	95	1,625	101.5	1,670	101.3			2,005	100.3
	24	0.63	17.40	16.14	103.6	95	1,755	109.6	1,805	109.4			2,165	108.3
	25	0.68	17.40	16.04	111.4	95	1,875	117.3	1,935	117.2			2,325	116.2
	26	0.73	17.40	15.94	119.3	95	2,005	125.2	2,065	125.1			2,480	124.0
	27	0.79	17.40	15.82	128.6	95	2,155	134.6	2,215	134.3			2,665	133.3
	28	0.85	17.40	15.70	137.9	95	2,300	143.8	2,370	143.6			2,855	142.7
18	21	0.54	19.50	18.42	100.4	113	1,720	107.5	1,770	107.2			2,120	106.0
	22	0.58	19.50	18.34	107.6	113	1,835	114.7	1,890	114.4			2,265	113.2
	23	0.63	19.50	18.24	116.5	113	1,975	123.5	2,035	123.3			2,445	122.2
	24	0.68	19.50	18.14	125.4	113	2,120	132.5	2,180	132.2			2,620	131.0
	25	0.73	19.50	18.04	134.3	113	2,260	141.4	2,330	141.1			2,800	140.0
	26	0.79	19.50	17.92	144.9	113	2,430	152.0	2,505	151.7			3,010	150.6
	27	0.85	19.50	17.80	155.4	113	2,600	162.5	2,675	162.2			3,220	161.0
	28	0.92	19.50	17.66	167.5	113	2,795	174.6	2,875	174.3			3,465	173.2

† Heavier thickness classes can be furnished when specified.
‡ Including bell. Calculated weight of pipe, rounded off to nearest 5 lb.
§ Including bell. Average weight per foot based on calculated weight of pipe before rounding.

TABLE 8.6

Standard Thickness Classes, Thicknesses, Diameters, and Weights of Mechanical-Joint Pipe Centrifugally Cast in Sand-Lined Molds

Size in.	Thickness Class†	Thickness	OD	ID	Weight of Barrel per Foot	Weight of Bell	Weight Based on 16-ft Laying Length		Weight Based on 16½-ft Laying Length		Weight Based on 18-ft Laying Length		Weight Based on 20-ft Laying Length	
							Per Length‡	Avg. per Foot§	Per Length‡	Avg. per Foot§	Per Length‡	Avg. per Foot§	Per Length‡	Avg. per Foot§
		in.			lb				lb					
3*	22	0.32	3.96	3.32	11.4	11	195	12.2	200	12.1	215	12.0		
	23	0.35	3.96	3.26	12.4	11	210	13.1	215	13.1	235	13.0		
	24	0.38	3.96	3.20	13.3	11	225	14.0	230	14.0	250	13.9		
4	22	0.35	4.80	4.10	15.3	16	260	16.4	270	16.3	290	16.2		
	23	0.38	4.80	4.04	16.5	16	280	17.6	290	17.5	315	17.4		
	24	0.41	4.80	3.98	17.6	16	300	18.6	305	18.6	335	18.5		
	25	0.44	4.80	3.92	18.8	16	315	19.8	325	19.8	355	19.7		
6	22	0.38	6.90	6.14	24.3	22	410	25.7	420	25.6	460	25.5	510	25.4
	23	0.41	6.90	6.08	26.1	22	440	27.6	455	27.5	490	27.3	545	27.2
	24	0.44	6.90	6.02	27.9	22	470	29.3	480	29.2	525	29.1	580	29.0
	25	0.48	6.90	5.94	30.2	22	505	31.6	520	31.5	565	31.4	625	31.3
	26	0.52	6.90	5.86	32.5	22	540	33.9	560	33.8	605	33.7	670	33.6
8	22	0.41	9.05	8.23	34.7	30	585	36.7	605	36.6	655	36.4	725	36.2
	23	0.44	9.05	8.17	37.1	30	625	39.0	640	38.9	700	38.8	770	38.6
	24	0.48	9.05	8.09	40.3	30	675	42.2	695	42.1	755	42.0	835	41.8
	25	0.52	9.05	8.01	43.5	30	725	45.4	750	45.3	815	45.2	900	45.0
	26	0.56	9.05	7.93	46.6	30	775	48.5	800	48.4	870	48.3	960	48.1
	27	0.60	9.05	7.85	49.7	30	825	51.6	850	51.5	925	51.4	1,025	51.2
10	22	0.44	11.10	10.22	46.0	40	775	48.5	800	48.4	870	48.2	960	48.0
	23	0.48	11.10	10.14	50.0	40	840	52.5	865	52.4	940	52.2	1,040	52.0
	24	0.52	11.10	10.06	53.9	40	900	56.4	930	56.3	1,010	56.1	1,120	55.9
	25	0.56	11.10	9.98	57.9	40	965	60.4	995	60.4	1,080	60.1	1,200	59.9
	26	0.60	11.10	9.90	61.8	40	1,030	64.3	1,060	64.2	1,150	64.0	1,275	63.8
	27	0.65	11.10	9.80	66.6	40	1,105	69.1	1,140	69.0	1,240	68.8	1,370	68.6
12	22	0.48	13.20	12.24	59.8	50	1,005	62.9	1,035	62.8	1,125	62.6	1,245	62.3
	23	0.52	13.20	12.16	64.6	50	1,085	67.7	1,115	67.6	1,215	67.4	1,340	67.1
	24	0.56	13.20	12.08	69.4	50	1,160	72.5	1,195	72.4	1,300	72.2	1,440	71.9
	25	0.60	13.20	12.00	74.1	50	1,235	77.2	1,275	77.1	1,385	76.9	1,530	76.6
	26	0.65	13.20	11.90	80.0	50	1,330	83.1	1,370	83.0	1,490	82.8	1,650	82.5
	27	0.70	13.20	11.80	85.8	50	1,425	89.0	1,465	88.8	1,595	88.6	1,765	88.3
	28	0.76	13.20	11.68	92.7	50	1,535	95.8	1,580	95.7	1,720	95.5	1,905	95.2

* Pipe of 3-in. size also available in 12-ft laying length. Weight (lb) per length for thickness class 22 is 150; for 23, 160; for 24, 170. Average weight per foot for thickness class 22 is 12.3; for 23, 13.3; for 24, 14.2.
† Heavier thickness classes can be furnished when specified.
‡ Including bell. Calculated weight of pipe rounded off to nearest 5 lb.
§ Including bell. Average weight per foot based on calculated weight of pipe before rounding.

8–8.2. *Cement mortar linings.* Cement linings shall be in accordance with ASA A21.4 (AWWA C104). Cement linings are recommended for most waters, and if desired, shall be specified on the purchase order.

For special conditions, other types of coatings and linings may be available. Such special coatings and linings shall be agreed upon at the time of purchase and shall be specified on the purchase order.

8–8.3. *Bituminous inside coating.* The inside coating for pipe not cement lined shall be a bituminous material similar to the standard outside coating, as thick as practicable, at least 1 mil thick. The coating, after drying 48 hr, shall impart no objectionable color, odor, or taste to water in contact with the coating for a minimum of 48 hr. The bituminous inside coating shall be applied to the inside surface of all pipe unless otherwise specified. Experience has indicated that such coating is not complete protection against loss in pipe capacity due to tuberculation.

Sec. 8–9—Hydrostatic Test

Each pipe shall be subjected to a hydrostatic proof test. The test pressures shall be as follows:

Pipe Size—*in.*	Proof Pressure *psi*
3–24 (all thicknesses)	500
30–48 (Class 23 and thinner)	400
(Class 24 and thicker)	500

This test may be made either before or after the standard outside coating and the bituminous inside coating have been applied, but shall be made before the application of cement lining or of a special lining. This requirement is not intended to preclude retesting, at the manufacturer's option, after application of a cement or a special lining.

The pipe shall be under the full test pressure for at least 10 sec. Suitable controls and recording devices shall be provided so that the test pressure and duration may be adequately ascertained. Any pipe that leaks or does not withstand the test pressure shall be rejected.

Sec. 8–10—Marking Pipe

The weight, class designation, and sampling period shall be shown on each pipe. The manufacturer's mark and the year in which the pipe was produced shall be cast or stamped on the pipe. When specified by the purchaser, initials not exceeding four in number shall be cast or stamped on the pipe. All required markings shall be clear and legible, in letters and numerals not less than ½ in. in height.

Sec. 8–11—Weighing

Each pipe shall be weighed before the application of any lining or coating other than the standard coating, and the weight shown on the outside or inside of the bell or spigot end.

Sec. 8–12—Acceptance Tests

The standard acceptance tests for the physical characteristics of the pipe shall be as follows:

Sec. 8–12.1—Talbot Strip Tests

Talbot strip tests shall be used to determine the acceptability of 3–24-in. pipe for modulus of rupture and secant modulus of elasticity.

8–12.1.1. *Sampling.* For sampling, each heat shall be divided into periods of approximately 3 hr; at least one sample shall be taken during each period. The sample for the first period shall be taken during the first hour, or, if casting is direct from the melting

unit, from the first ladle. Samples shall be taken so that each size of pipe cast for 2 hr or longer during the heat and each mixture or source of iron used for 2 hr or longer during the heat shall be fairly represented.

8–12.1.2. *Method of testing.* The method of testing Talbot strips is given in the Appendix.

8–12.1.3. *Acceptance values.* The acceptance values for tests on Talbot strips from 3–24-in. pipe shall be as follows:

Modulus of rupture: 40,000 psi minimum.

Secant modulus of elasticity: 10,000,000 psi, maximum.

If the modulus of elasticity exceeds 10,000,000 psi, the modulus of rupture shall exceed 40,000 psi in at least the same proportion.

Sec. 8–12.2—Test Bar Tests

At the manufacturer's option, test bar tests or Talbot strip tests shall be used to determine the acceptability of 30–48-in. pipe.

The test bars shall be ASTM standard 2-in. diameter bars cast and tested transversely in accordance with ASTM A48–56 specifications. They shall be cast and tested from the first ladle of iron, and at approximately 3-hr intervals throughout the heat. Test bars shall have a minimum breaking load of 6,000 lb and a deflection of 0.15 in. plus 0.01 in. for each 500 lb, that the breaking load exceeds 6,000 lb.

Test bars may be cast in pairs and at least one bar from each pair shall be tested, but the manufacturer shall have the right to test both bars, in which case the better bar shall be taken as representative.

If Talbot strips are tested, they shall meet the requirements of Sec. 8–12.1.3.

Sec. 8–13—Ring Tests and Full-Length Bursting Tests

The manufacturer shall make bursting tests and ring tests in conjunction with strip tests so that he can certify the design values of the modulus of rupture (40,000 psi) and the bursting tensile strength of the iron in the pipe (18,000 psi). These tests shall be made in accordance with dimensions and methods given in the Appendix. At least one sample for these ring and bursting tests shall be selected from each of the following size groups from each calendar month's cast.

Group	Size in.
1	6, 8
2	10, 12
3	14, 16, 18
4	20, 24
5	30, 36, 42, 48

When no pipe in a size group are manufactured during the calendar month, no tests on these sizes are required. Ring tests and bursting tests are not required on 3- and 4-in. pipe. At least three Talbot strips shall be tested from each pipe selected for bursting. Tests and records shall include the modulus of rupture of each strip and ring, and the modulus of elasticity of each strip.

For 30–48-in. pipe, one ring and one Talbot strip shall be cut and tested from each 200 pieces, but from at least one pipe of each size each calendar month. These tests shall meet the requirements of this section for rings, and Sec. 8–12.1.3 for Talbot strips.

Sec. 8–14—Chemical Analyses

Analyses of the iron shall be made at sufficiently frequent intervals dur-

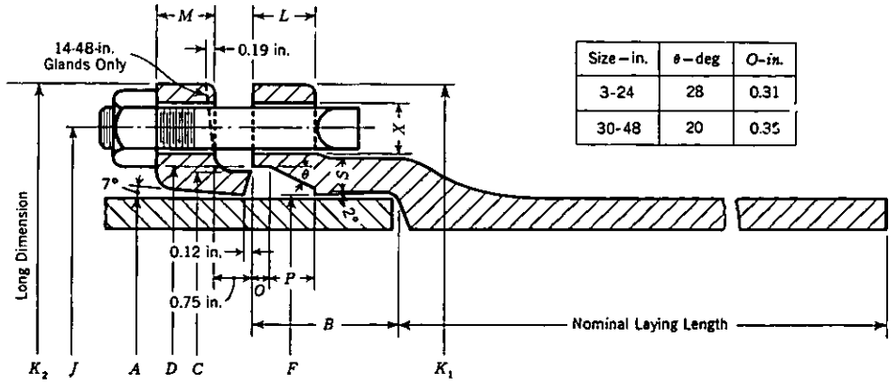

Size–in.	θ–deg	O–in.
3-24	28	0.31
30-48	20	0.35

Standard Mechanical-Joint Dimensions (See Table 8.5)

Notes

1. The thickness of the bell, S, shall in all instances be equal to, and generally exceeds by at least 10 per cent, the nominal wall thickness of the pipe of which it is a part.
2. Cored holes may be tapered an additional 0.06 in. in diameter.
3. In the event of ovalness of the spigot OD, the mean diameter measured by a circumferential tape shall not be less than the minimum diameter shown in the table. The minor axis shall not be less than the minimum diameter shown in the table plus an additional minus tolerance of 0.04 in. for sizes 8–12 in., 0.07 in. for sizes 14–24 in., and 0.10 in. for sizes 30–48 in.
4. K_2 is OD of glands across bolt holes; outside of gland may have polygon shape.
5. This joint conforms to ASA A21.11 (AWWA C111).

TABLE 8.5

Standard Mechanical-Joint Dimensions for Pipe Centrifugally Cast in Sand-Lined Molds

Size	Outside Diam. of Spigot End A	B	C	D	F	X	J	K_1	K_2	L	M	P	S	Bolts No.	Bolts Size	Bolts Length	Weight Bell	Weight Gland, Bolts, & Gasket
	Dimension—in.															in.	lb	
3	3.96 ±.06	2.50	4.84 ±.04	4.94 +.06 −.04	4.06 +.07 −.03	¾ +.06 −.0	6.19 ±.06	7.62 −.06	7.69 −.12	.94 −.06	.62 −.06	.63	.47 −.05	4	⅝	3	11	7
4	4.80 ±.06	2.50	5.92 ±.04	6.02 +.06 −.04	4.90 +.07 −.03	⅞ +.06 −.0	7.50 ±.06	9.06 −.06	9.12 −.12	1.00 −.06	.75 −.06	.75	.55 −.05	4	¾	3½	16	10
6	6.90 ±.06	2.50	8.02 ±.04	8.12 +.06 −.04	7.00 +.07 −.03	⅞ +.06 −.0	9.50 ±.06	11.06 −.06	11.12 −.12	1.06 −.06	.88 −.06	.75	.60 −.05	6	¾	3½	22	16
8	9.05 ±.06	2.50	10.17 ±.04	10.27 +.06 −.04	9.15 +.07 −.03	⅞ +.06 −.0	11.75 ±.06	13.31 −.06	13.37 −.12	1.12 −.08	1.00 −.08	.75	.66 −.05	6	¾	4	30	25
10	11.10 ±.06	2.50	12.22 +.06 −.04	12.34 +.06 −.04	11.20 +.07 −.03	⅞ +.06 −.0	14.00 ±.06	15.62 −.06	15.62 −.12	1.19 −.08	1.00 −.08	.75	.72 −.06	8	¾	4	40	30
12	13.20 ±.06	2.50	14.32 +.06 −.04	14.44 +.06 −.04	13.30 +.07 −.03	⅞ +.06 −.0	16.25 ±.06	17.88 −.06	17.88 −.12	1.25 −.08	1.00 −.08	.75	.79 −.06	8	¾	4	50	40
14	15.30 +.05 −.08	3.50	16.40 +.07 −.05	16.54 +.07 −.05	15.44 +.06 −.07	⅞ +.06 −.0	18.75 ±.06	20.25 −.08	20.25 −.12	1.31 −.12	1.25 −.12	.75	.85 −.08	10	¾	4	78	45
16	17.40 +.05 −.08	3.50	18.50 +.07 −.05	18.64 +.07 −.05	17.54 +.06 −.07	⅞ +.06 −.0	21.00 ±.06	22.50 −.08	22.50 −.12	1.38 −.12	1.31 −.12	.75	.91 −.08	12	¾	4½	95	55
18	19.50 +.05 −.08	3.50	20.60 +.07 −.05	20.74 +.07 −.05	19.64 +.06 −.07	⅞ +.06 −.0	23.25 ±.06	24.75 −.08	24.75 −.15	1.44 −.12	1.38 −.12	.75	.97 −.08	12	¾	4½	113	65
20	21.60 +.05 −.08	3.50	22.70 +.07 −.05	22.84 +.07 −.05	21.74 +.06 −.07	⅞ +.06 −.0	25.50 ±.06	27.00 −.08	27.00 −.15	1.50 −.12	1.44 −.12	.75	1.03 −.08	14	¾	4½	134	85
24	25.80 +.05 −.08	3.50	26.90 +.07 −.05	27.04 +.07 −.05	25.94 +.06 −.07	⅞ +.06 −.0	30.00 ±.06	31.50 −.08	31.50 −.15	1.62 −.12	1.56 −.12	.75	1.08 −.08	16	¾	5	177	105
30	32.00 +.08 −.06	4.00	33.29 +.08 −.06	33.46 +.08 −.06	32.17 +.08 −.06	1¼ +.06 −.0	36.88 ±.06	39.12 −.12	39.12 −.18	1.81 −.12	2.00 −.12	1.00	1.20 −.10	20	1	6	285	220
36	38.30 +.08 −.06	4.00	39.59 +.08 −.06	39.76 +.08 −.06	38.47 +.08 −.06	1⅛ +.06 −.0	43.75 ±.06	46.00 −.12	46.00 −.18	2.00 −.12	2.00 −.12	1.00	1.35 −.10	24	1	6	395	285
42	44.50 +.08 −.06	4.00	45.79 +.08 −.06	45.96 +.08 −.06	44.67 +.08 −.06	1⅜ +.06 −.0	50.62 ±.06	53.12 −.12	53.12 −.18	2.00 −.12	2.00 −.12	1.00	1.48 −.10	28	1¼	6	510	400
48	50.80 +.08 −.06	4.00	52.09 +.08 −.06	52.26 +.08 −.06	50.97 +.08 −.06	1⅜ +.06 −.0	57.50 ±.06	60.00 −.12	60.00 −.18	2.00 −.12	2.00 −.12	1.00	1.61 −.10	32	1¼	6	645	475

ing the heat to determine compliance with the following limits:

Substance	Maximum Limit *per cent*
Phosphorus	0.90
Sulphur	0.12

Control of the other chemical constituents shall be maintained to meet the physical property requirements of this standard. Samples for chemical analyses shall be representative and shall be obtained by drilling either acceptance test specimens or specimens cast for this purpose.

Sec. 8–15—Foundry Records

The results of the following tests shall be recorded and retained for one year and shall be available to the purchaser at the foundry. Written transcripts of the results of these tests shall be furnished when specified on the purchase order:

8–15.1. *Talbot strip tests.* See Sec. 8–12.1.

8–15.2. *Test bar tests.* See Sec. 8–12.2.

8–15.3. *Ring tests and full-length bursting tests.* See Sec. 8–13.

8–15.4. *Chemical analyses.* See Sec. 8–14.

Sec. 8–16—Additional Tests Required by Purchaser

When tests other than those provided in this standard are required by the purchaser, such tests shall be specified in the invitation for bids and on the purchase order.

Sec. 8–17—Defective Specimens and Retests

When any physical test specimen shows defective machining or lack of continuity of metal, it shall be discarded and replaced by another specimen. When any sound test specimen fails to meet the specified requirements, the pipe from which it was taken shall be rejected and a retest may be made on two additional sound specimens from pipe cast in the same sampling period as the specimen which failed. Both of the additional specimens shall meet the prescribed tests to qualify the pipe produced in that sampling period.

If a routine test bar fails to meet the requirements, the manufacturer shall have the right to substitute a Talbot strip cut from a pipe cast with iron represented by the failed test bar tests. If the strip test meets the requirements, the pipe for that period shall be acceptable.

Sec. 8–18—Rejection of Pipe

When any routine chemical analysis fails to meet the requirements of Sec. 8–14 or when any physical acceptance test fails to meet the requirements of Sec. 8–12.1, 8–12.2, or 8–17, the pipe cast in the same sampling period shall be rejected except as subject to the provision of Sec. 8–19.

Sec. 8–19—Determining Rejection

The manufacturer may determine the amount of rejection by making similar additional tests of pipe of the same size as that rejected until the rejected lot is bracketed in order of manufacture by an acceptable test at each end of the interval in question. When pipe of one size is rejected from a sampling period, the acceptability of pipe of different sizes from that same period may be established by making the routine acceptance tests for these sizes.

Appendix *

Table of Contents

Sec. 8–A1—Talbot Strip Tests
Sec. 8–A2—Ring Tests
Sec. 8–A3—Full-Length Bursting Tests
Sec. 8–A4—Test Bars

Tables †

Table 8.1—Standard Bell-and-Spigot Joint Dimensions for Pipe Centrifugally Cast in Sand-Lined Molds.

Table 8.2—Standard Thickness Classes, Thicknesses, Diameters, and Weights of Bell-and-Spigot Pipe Centrifugally Cast in Sand-Lined Molds.

Table 8.3—Standard Thicknesses, Diameters, and Weights of Bell-and-Spigot Pipe Centrifugally Cast in Sand-Lined Molds.

Table 8.4—Standard Thicknesses of Pipe Centrifugally Cast in Sand-Lined Molds.

Table 8.5—Standard Mechanical-Joint Dimensions for Pipe Centrifugally Cast in Sand-Lined Molds.

Table 8.6—Standard Thickness Classes, Thicknesses, Diameters, and Weights of Mechanical-Joint Pipe Centrifugally Cast in Sand-Lined Molds.

Table 8.7—Standard Thicknesses, Diameters, and Weights of Mechanical-Joint Pipe Centrifugally Cast in Sand-Lined Molds.

* This appendix is a part of ASA A21.8—American Standard for Cast-Iron Pipe Centrifugally Cast in Sand-Lined Molds, for Water or Other Liquids.

† Data on thicknesses required for greater depths of cover and conditions of laying other than those assumed in the following tables will be found in Table 2.2 of ASA A21.1 (AWWA C101).

Note that the following tables show only one outside diameter as standard for each size pipe. When bell-and-spigot pipe with special outside diameter is used in sizes of 14 in. and larger, the user is cautioned to specify fittings with socket diameters and spigot outside diameters to fit the special outside-diameter pipe.

TABLE 8.4—(*contd.*)

Standard Thicknesses of Pipe Centrifugally Cast in Sand-Lined Molds*

Laying Condition A—flat-bottom trench, without blocks, untamped backfill
Laying Condition B—flat-bottom trench, without blocks, tamped backfill
Laying Condition C—pipe laid on blocks, untamped backfill
Laying Condition D—pipe laid on blocks, tamped backfill

Size *in.*	Working Pressure *psi*	3½-ft Cover				5-ft Cover				8-ft Cover			
		Laying Condition				Laying Condition				Laying Condition			
		A	B	C	D	A	B	C	D	A	B	C	D
		Thickness*—*in.*											
16	50	0.54	0.50	0.63	0.58	0.58	0.54	0.63	0.58	0.63	0.58	0.73	0.63
	100	0.54	0.54	0.63	0.58	0.58	0.54	0.68	0.58	0.63	0.58	0.73	0.68
	150	0.58	0.54	0.63	0.58	0.58	0.54	0.68	0.63	0.68	0.63	0.79	0.68
	200	0.58	0.58	0.68	0.64	0.63	0.58	0.68	0.63	0.68	0.63	0.79	0.73
	250	0.63	0.58	0.68	0.63	0.63	0.63	0.73	0.68	0.73	0.68	0.79	0.73
	300	0.63	0.63	0.73	0.68	0.68	0.68	0.73	0.68	0.73	0.73	0.85	0.79
	350	0.68	0.68	0.73	0.68	0.73	0.68	0.79	0.73	0.79	0.73	0.85	0.79
18	50	0.58	0.54	0.63	0.58	0.58	0.54	0.68	0.63	0.68	0.63	0.79	0.68
	100	0.58	0.54	0.68	0.63	0.63	0.58	0.73	0.63	0.68	0.63	0.79	0.73
	150	0.63	0.58	0.68	0.63	0.63	0.58	0.73	0.68	0.73	0.68	0.79	0.73
	200	0.63	0.58	0.73	0.68	0.68	0.63	0.73	0.68	0.73	0.68	0.85	0.79
	250	0.68	0.63	0.73	0.68	0.68	0.68	0.79	0.73	0.79	0.73	0.85	0.79
	300	0.68	0.68	0.79	0.73	0.73	0.73	0.79	0.79	0.79	0.79	0.92	0.85
	350	0.79	0.73	0.79	0.79	0.79	0.79	0.85	0.79	0.85	0.85	0.92	0.85
20	50	0.62	0.57	0.72	0.62	0.67	0.57	0.72	0.67	0.72	0.67	0.78	0.72
	100	0.62	0.57	0.72	0.67	0.67	0.62	0.78	0.67	0.72	0.67	0.84	0.78
	150	0.67	0.62	0.72	0.67	0.67	0.62	0.78	0.72	0.78	0.72	0.84	0.78
	200	0.67	0.62	0.78	0.72	0.72	0.67	0.78	0.72	0.78	0.72	0.91	0.84
	250	0.72	0.67	0.78	0.72	0.78	0.72	0.84	0.78	0.84	0.78	0.91	0.84
	300	0.78	0.72	0.84	0.78	0.78	0.78	0.84	0.84	0.84	0.84	0.98	0.91
	350	0.84	0.78	0.84	0.84	0.84	0.84	0.91	0.84	0.91	0.84	0.98	0.91
24	50	0.68	0.63	0.79	0.68	0.73	0.63	0.79	0.73	0.79	0.73	0.85	0.79
	100	0.73	0.63	0.79	0.73	0.73	0.68	0.85	0.79	0.85	0.73	0.92	0.85
	150	0.73	0.68	0.79	0.79	0.79	0.73	0.85	0.79	0.85	0.79	0.92	0.85
	200	0.79	0.73	0.85	0.79	0.79	0.79	0.92	0.85	0.92	0.85	0.99	0.92
	250	0.79	0.79	0.85	0.85	0.85	0.79	0.92	0.85	0.92	0.85	0.99	0.99
	300	0.85	0.85	0.92	0.85	0.92	0.85	0.99	0.92	0.99	0.92	1.07	0.99
	350	0.92	0.92	0.99	0.92	0.99	0.92	0.99	0.99	1.07	0.99	1.07	1.07
30	50	0.85	0.73	0.85	0.85	0.85	0.79	0.92	0.85	0.92	0.85	0.99	0.92
	100	0.85	0.79	0.92	0.85	.92	0.79	0.99	0.92	0.99	0.85	1.07	0.99
	150	0.92	0.79	0.92	0.92	0.92	0.85	0.99	0.92	0.99	0.92	1.07	0.99
	200	0.92	0.85	0.99	0.92	0.99	0.92	1.07	0.99	1.07	0.99	1.16	1.07
	250	0.99	0.92	1.07	0.99	1.07	0.99	1.07	1.07	1.16	1.07	1.16	1.16
36	50	0.94	0.81	1.02	0.94	1.02	0.87	1.10	0.94	1.10	0.94	1.19	1.02
	100	0.94	0.87	1.02	0.94	1.02	0.87	1.10	1.02	1.10	1.02	1.19	1.10
	150	1.02	0.87	1.10	1.02	1.10	0.94	1.10	1.02	1.19	1.02	1.19	1.19
	200	1.10	0.94	1.10	1.02	1.10	1.02	1.19	1.10	1.19	1.10	1.29	1.19
	250	1.10	1.02	1.19	1.10	1.19	1.10	1.29	1.19	1.29	1.19	1.39	1.29
42	50	1.05	0.90	1.13	1.05	1.13	0.97	1.13	1.05	1.22	1.05	1.32	1.13
	100	1.05	0.97	1.13	1.05	1.13	0.97	1.22	1.13	1.22	1.13	1.32	1.22
	150	1.13	0.97	1.22	1.13	1.22	1.05	1.22	1.13	1.32	1.13	1.32	1.32
	200	1.22	1.05	1.22	1.13	1.22	1.13	1.32	1.22	1.32	1.22	1.43	1.32
	250	1.32	1.13	1.32	1.22	1.32	1.22	1.43	1.32	1.43	1.32	1.54	1.43
48	50	1.14	0.98	1.23	1.14	1.23	1.06	1.33	1.14	1.33	1.14	1.44	1.33
	100	1.23	1.06	1.23	1.14	1.23	1.06	1.33	1.23	1.33	1.23	1.44	1.33
	150	1.23	1.14	1.33	1.23	1.33	1.14	1.44	1.33	1.44	1.33	1.56	1.44
	200	1.33	1.14	1.44	1.33	1.44	1.23	1.44	1.33	1.56	1.33	1.56	1.44
	250	1.44	1.33	1.44	1.33	1.44	1.33	1.56	1.44	1.56	1.44	1.68	1.56

* Thicknesses include allowances for foundry practice, corrosion, and either water hammer or truck load.

TABLE 8.4

Standard Thicknesses of Pipe Centrifugally Cast in Sand-Lined Molds*

Laying Condition A—flat-bottom trench, without blocks, untamped backfill
Laying Condition B—flat-bottom trench, without blocks, tamped backfill
Laying Condition C—pipe laid on blocks, untamped backfill
Laying Condition D—pipe laid on blocks, tamped backfill

Size *in.*	Working Pressure *psi*	3½-ft Cover				5-ft Cover				8-ft Cover			
		Laying Condition				Laying Condition				Laying Condition			
		A	B	C	D	A	B	C	D	A	B	C	D
		Thickness—*in.*											
3†	50	0.32	0.32	0.32	0.32	0.32	0.32	0.32	0.32	0.32	0.32	0.38	0.32
	100	0.32	0.32	0.32	0.32	0.32	0.32	0.32	0.32	0.32	0.32	0.38	0.32
	150	0.32	0.32	0.32	0.32	0.32	0.32	0.32	0.32	0.32	0.32	0.38	0.32
	200	0.32	0.32	0.32	0.32	0.32	0.32	0.32	0.32	0.32	0.32	0.38	0.32
	250	0.32	0.32	0.32	0.32	0.32	0.32	0.35	0.32	0.32	0.32	0.38	0.32
	300	0.32	0.32	0.32	0.32	0.32	0.32	0.35	0.32	0.32	0.32	0.38	0.32
	350	0.32	0.32	0.32	0.32	0.32	0.32	0.35	0.32	0.32	0.32	0.38	0.32
4†	50	0.35	0.35	0.35	0.35	0.35	0.35	0.35	0.35	0.35	0.35	0.41	0.35
	100	0.35	0.35	0.35	0.35	0.35	0.35	0.35	0.35	0.35	0.35	0.41	0.35
	150	0.35	0.35	0.35	0.35	0.35	0.35	0.38	0.35	0.35	0.35	0.41	0.35
	200	0.35	0.35	0.35	0.35	0.35	0.35	0.38	0.35	0.35	0.35	0.44	0.35
	250	0.35	0.35	0.35	0.35	0.35	0.35	0.38	0.35	0.35	0.35	0.44	0.35
	300	0.35	0.35	0.35	0.35	0.35	0.35	0.38	0.35	0.35	0.35	0.44	0.35
	350	0.35	0.35	0.38	0.35	0.35	0.35	0.38	0.35	0.35	0.35	0.44	0.35
6†	50	0.38	0.38	0.41	0.38	0.38	0.38	0.44	0.38	0.38	0.38	0.48	0.38
	100	0.38	0.38	0.41	0.38	0.38	0.38	0.44	0.38	0.38	0.38	0.48	0.38
	150	0.38	0.38	0.41	0.38	0.38	0.38	0.44	0.38	0.38	0.38	0.48	0.38
	200	0.38	0.38	0.41	0.38	0.38	0.38	0.44	0.38	0.38	0.38	0.52	0.38
	250	0.38	0.38	0.44	0.38	0.38	0.38	0.44	0.38	0.38	0.38	0.52	0.38
	300	0.38	0.38	0.44	0.38	0.38	0.38	0.44	0.38	0.38	0.38	0.52	0.38
	350	0.38	0.38	0.44	0.38	0.38	0.38	0.48	0.38	0.38	0.38	0.52	0.38
8†	50	0.41	0.41	0.44	0.41	0.41	0.41	0.48	0.41	0.41	0.41	0.52	0.41
	100	0.41	0.41	0.48	0.41	0.41	0.41	0.48	0.41	0.41	0.41	0.56	0.41
	150	0.41	0.41	0.48	0.41	0.41	0.41	0.48	0.41	0.41	0.41	0.56	0.41
	200	0.41	0.41	0.48	0.41	0.41	0.41	0.52	0.41	0.41	0.41	0.56	0.44
	250	0.41	0.41	0.48	0.41	0.41	0.41	0.52	0.41	0.44	0.41	0.56	0.44
	300	0.41	0.41	0.48	0.41	0.41	0.41	0.52	0.41	0.44	0.44	0.60	0.44
	350	0.41	0.41	0.52	0.41	0.52	0.41	0.52	0.44	0.48	0.44	0.60	0.48
10	50	0.44	0.44	0.48	0.44	0.44	0.44	0.52	0.44	0.44	0.44	0.60	0.48
	100	0.44	0.44	0.52	0.44	0.44	0.44	0.52	0.44	0.48	0.44	0.60	0.48
	150	0.44	0.44	0.52	0.44	0.44	0.44	0.56	0.44	0.48	0.44	0.60	0.48
	200	0.44	0.44	0.52	0.44	0.44	0.44	0.56	0.44	0.48	0.48	0.60	0.52
	250	0.44	0.44	0.56	0.44	0.48	0.44	0.56	0.48	0.52	0.48	0.65	0.52
	300	0.48	0.44	0.56	0.48	0.48	0.48	0.56	0.48	0.52	0.52	0.65	0.56
	350	0.48	0.48	0.56	0.48	0.52	0.52	0.60	0.52	0.56	0.52	0.65	0.56
12	50	0.48	0.48	0.52	0.48	0.48	0.48	0.56	0.48	0.52	0.48	0.65	0.52
	100	0.48	0.48	0.56	0.48	0.48	0.48	0.56	0.48	0.52	0.48	0.65	0.52
	150	0.48	0.48	0.56	0.48	0.48	0.48	0.56	0.48	0.52	0.52	0.65	0.56
	200	0.48	0.48	0.56	0.48	0.48	0.48	0.60	0.52	0.56	0.52	0.65	0.56
	250	0.52	0.48	0.60	0.52	0.52	0.52	0.60	0.52	0.56	0.56	0.70	0.60
	300	0.52	0.52	0.60	0.52	0.56	0.52	0.60	0.56	0.60	0.56	0.70	0.60
	350	0.56	0.56	0.60	0.56	0.56	0.56	0.65	0.60	0.60	0.60	0.76	0.65
14	50	0.51	0.48	0.59	0.51	0.51	0.48	0.59	0.55	0.59	0.55	0.69	0.59
	100	0.51	0.48	0.59	0.55	0.55	0.51	0.64	0.55	0.59	0.55	0.69	0.64
	150	0.55	0.51	0.59	0.55	0.55	0.51	0.64	0.59	0.64	0.59	0.75	0.64
	200	0.55	0.51	0.64	0.59	0.55	0.55	0.64	0.59	0.64	0.59	0.75	0.69
	250	0.59	0.55	0.64	0.59	0.59	0.59	0.69	0.59	0.64	0.64	0.75	0.69
	300	0.59	0.59	0.69	0.59	0.64	0.59	0.69	0.64	0.69	0.64	0.81	0.69
	350	0.64	0.64	0.69	0.64	0.64	0.64	0.75	0.69	0.75	0.69	0.81	0.75

* Thicknesses include allowances for foundry practice, corrosion, and either water hammer or truck load.
† Pipe of the thickness shown for C condition are safe as beams for only the most favorable block spacing. See ASA A21.1 (AWWA C101).

Sec. 8-A1—Talbot Strip Tests

Talbot strips (Fig. 8.1) shall be machined longitudinally from each pipe specimen selected for testing by this method. These Talbot strips may be cut from a part of the ring little stressed in the ring test—that is, near one of the elements marked *a* in the ilustration of the ring test (Fig. 8.2). The strips in any case will be in cross section as indicated in Fig. 8.1—that is, will have for their width the thickness of the pipe and for their depth 0.50 in. Their length shall be at least 10½ in. These strips shall be tested as beams on supports 10 in. apart with loads applied perpendicularly to the machined faces at two points 3¼ in. from the supports. The breaking load

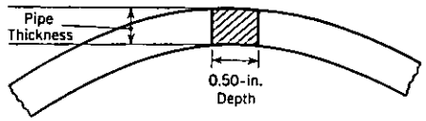

Fig. 8.1. Position From Which Talbot Strip is Cut

and the deflection shall be observed and recorded.

The strip shall be accurately calibrated at the point of rupture and the modulus of rupture, R, shall be calculated by the usual beam formula, which for this case reduces to the expression:

$$R = \frac{10W}{td^2}$$

The secant modulus of elasticity, E_s, in pounds per square inch, shall be computed by the formula:

$$E_s = \frac{21.3R}{dy}$$

In the above formulas, R is the modulus of rupture (psi); E_s the secant modulus of elasticity (psi); W, the breaking load (lb); d, the depth (in.) of the strip (intended to be 0.50 in.); t, the width (in.) of the strip (pipe thickness); and y, the deflection (in.) of the strip at the center at breaking load.

Deflection measurements shall be that of the specimen and shall not include any compression of the supports or loading blocks, or backlash or distortion of the testing machine.

Sec. 8-A2—Ring Tests

The maximum length of any ring shall not exceed 12 in.; for pipe 14 in. and larger, the minimum length shall

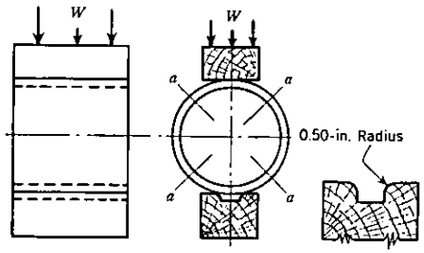

Fig. 8.2. Assembly for Ring Test

be 10½ in.; for pipe 12 in. and smaller, the minimum length shall be one-half the nominal diameter of the pipe. Each ring shall be tested by the three-edge bearing method as indicated in Fig. 8.2. The lower bearing for the ring shall consist of two strips with vertical sides having their interior top edges rounded to a radius of approximately ½ in. The strips shall be of hard wood or of metal. If of metal, a piece of fabric or leather approximately $\frac{3}{16}$ in. thick shall be laid over them. They shall be straight and shall be securely fastened to a rigid block, with their interior vertical faces the following distances apart:

Pipe Size in.	Bearing Strip Spacing in.
3–12	½
14–24	1
30–48	2

The upper bearing shall be a hard wood block, straight and true from end to end. The upper and lower bearings shall extend the full length of the ring. The ring shall be placed symmetrically between the two bearings, and the center of application of the load shall be so placed that the vertical deformation at the two ends of the ring shall be approximately equal. If the ring is not uniform in thickness, it shall be so placed that the thick and thin portions are near the ends of the horizonal diameter.

For purposes of Sec. 8–15, a record of the breaking load of each ring tested shall be made. The modulus of rupture is computed from the formula:

$$R = 0.954 \frac{W(d + t)}{bt^2}$$

in which R is the modulus of rupture (psi); W, the breaking load (lb); d, the average inside diameter (in.) of the ring; t, the average thickness (in.) of metal along the line of fracture; and b, the length (in.) of the ring.

Sec. 8–A3—Full-Length Bursting Tests

The bursting tensile strength shall be determined by testing full-length pipe (less the amount cut off for ring and strip test specimens) to destruction by hydraulic pressure. Bells may be removed to facilitate testing. A suitable means for holding the end thrust shall be used which will not subject the pipe to endwise tension or compression, or other parasitic stresses. A calibrated pressure gage shall be used for determining the bursting pressure. This gage shall be connected to the interior of the test pipe by a separate connection from that which supplies water for the test. The unit tensile strength in bursting shall be obtained by the use of the formula:

$$S = \frac{Pd}{2t}$$

in which S is the bursting tensile strength (psi) of the iron; P, the internal pressure (psi) at bursting; d, the average inside diameter (in.) of the pipe; and t, the minimum average thickness (in.) of the pipe along the principal line of break.

Measurements of thickness shall be taken along the principal line of break at 1-ft intervals.

The minimum average thickness along the principal line of break shall be obtained by averaging the measurements at the thinnest section at a weight of two and at the adjacent sections on each side at a weight of one each; or, if the thinnest section is at the end of the break, by averaging this thinnest-section measurement at a weight of two and the measurements of the adjacent section and the next section at a weight of one each.

Sec. 8–A4—Test Bars

8–A4.1. *Dimensions.* Test bars for pipe of 30–48-in. diameter shall be 2 in. in diameter and not less than 26 in. long. Individual test bars may vary as much as 3 per cent from the standard diameter.

8–A4.2. *Method of casting.* The bars shall be cast vertically in well faced, dry sand molds provided with

TABLE 8.3—(*contd.*)

Standard Thicknesses, Diameters, and Weights of Bell-and-Spigot Pipe Centrifugally Cast in Sand-Lined Molds

Size	Thickness	OD	Weight Based on 16-ft Laying Length		Weight Based on 16½-ft Laying Length		Weight Based on 18-ft Laying Length		Weight Based on 20-ft Laying Length	
			Per Length†	Avg. per Foot‡	Per Length†	Avg. per Foot‡	Per Length†	Avg. per Foot‡	Per Length†	Avg. per Foot‡
	in.		lb							
Working Pressure 200 psi—462-ft Head										
3*	0.32	3.96	195	12.4	205	12.3	220	12.2		
4	0.35	4.80	265	16.5	270	16.4	295	16.4		
6	0.38	6.90	415	25.9	425	25.8	465	25.7	510	25.5
8	0.41	9.05	590	37.0	610	36.9	660	36.8	730	36.6
10	0.44	11.10	785	49.1	810	49.0	880	48.8	970	48.5
12	0.48	13.20	1,020	63.7	1,050	63.6	1,140	63.3	1,260	63.0
14	0.55	15.30	1,350	84.4	1,390	84.3			1,670	83.4
16	0.58	17.40	1,625	101.6	1,675	101.4			2,010	100.4
18	0.63	19.50	1,980	123.7	2,035	123.4			2,445	122.2
20	0.67	21.60	2,335	145.9	2,405	145.7			2,885	144.2
24	0.79	25.80	3,290	205.6	3,385	205.3			4,065	203.2
30	0.92	32.00	4,765	297.8	4,905	297.3				
36	1.02	38.30	6,355	397.1						
42	1.13	44.50	8,195	512.3						
48	1.23	50.80	10,195	637.2						
Working Pressure 250 psi—577-ft Head										
3*	0.32	3.96	195	12.4	205	12.3	220	12.2		
4	0.35	4.80	265	16.5	270	16.4	295	16.4		
6	0.38	6.90	415	25.9	425	25.8	465	25.7	510	25.5
8	0.41	9.05	590	37.0	610	36.9	660	36.8	730	36.6
10	0.44	11.10	785	49.1	810	49.0	880	48.8	970	48.5
12	0.52	13.20	1,095	68.5	1,130	68.4	1,225	68.1	1,355	67.8
14	0.59	15.30	1,450	90.6	1,490	90.4			1,790	89.4
16	0.63	17.40	1,765	110.4	1,815	110.1			2,180	108.9
18	0.68	19.50	2,135	133.4	2,195	133.1			2,635	131.7
20	0.72	21.60	2,505	156.7	2,580	156.4			3,095	154.7
24	0.79	25.80	3,290	205.6	3,385	205.3			4,065	203.2
30	0.99	32.00	5,095	318.4	5,245	317.9				
36	1.10	38.30	6,810	425.5						
42	1.22	44.50	8,790	549.5						
48	1.33	50.80	10,950	684.5						
Working Pressure 300 psi—693-ft Head										
3*	0.32	3.96	195	12.4	205	12.3	220	12.2		
4	0.35	4.80	265	16.5	270	16.4	295	16.4		
6	0.38	6.90	415	25.9	425	25.8	465	25.7	510	25.5
8	0.41	9.05	590	37.0	610	36.9	660	36.8	730	36.6
10	0.48	11.10	850	53.1	875	53.0	950	52.8	1,050	52.5
12	0.52	13.20	1,095	68.5	1,130	68.4	1,225	68.1	1,355	67.8
14	0.59	15.30	1,450	90.6	1,490	90.4			1,790	89.4
16	0.68	17.40	1,890	118.2	1,945	117.9			2,335	116.7
18	0.73	19.50	2,275	142.3	2,345	142.1			2,815	140.7
20	0.78	21.60	2,695	168.5	2,775	168.2			3,335	166.7
24	0.85	25.80	3,515	219.8	3,620	219.5			4,350	217.5
Working Pressure 350 psi—808-ft Head										
3*	0.32	3.96	195	12.4	205	12.3	220	12.2		
4	0.35	4.80	265	16.5	270	16.4	295	16.4		
6	0.38	6.90	415	25.9	425	25.8	465	25.7	510	25.5
8	0.41	9.05	590	37.0	610	36.9	660	36.8	730	36.6
10	0.52	11.10	920	57.4	945	57.3	1,025	57.0	1,135	56.7
12	0.56	13.20	1,180	73.8	1,215	73.7	1,320	73.3	1,460	73.0
14	0.64	15.30	1,560	97.5	1,605	97.3			1,930	96.4
16	0.68	17.40	1,890	118.2	1,945	117.9			2,335	116.7
18	0.79	19.50	2,445	152.9	2,520	152.7			3,025	151.3
20	0.84	21.60	2,885	180.2	2,970	179.9			3,565	178.3
24	0.92	25.80	3,780	236.3	3,895	236.0			4,680	234.0

* Pipe of 3-in. size also available in 12-ft laying length. Weight per length† is 150 lb; average weight per foot is 12.7 lb for all working pressures and heads.

† Including bell. Calculated weight of pipe rounded off to nearest 5 lb.

‡ Including bell. Average weight per foot based on calculated weight of pipe before rounding.

TABLE 8.3

Standard Thicknesses, Diameters, and Weights of Bell-and-Spigot Pipe Centrifugally Cast in Sand-Lined Molds

These thicknesses and weights are for pipe laid without blocks, on flat-bottom trench, with tamped backfill (Laying Condition B), under 5 ft of cover. For other conditions see Tables 8.2 and 8.4 hereof and ASA A21.1 (AWWA C101).

Size	Thickness	OD	Weight Based on 16-ft Laying Length		Weight Based on 16½-ft Laying Length		Weight Based on 18-ft Laying Length		Weight Based on 20-ft Laying Length	
			Per Length†	Avg. per Foot‡	Per Length†	Avg. per Foot‡	Per Length†	Avg. per Foot‡	Per Length†	Avg. per Foot‡
in.			*lb*							
Working Pressure 50 psi—115-ft Head										
3*	0.32	3.96	195	12.4	205	12.3	220	12.2		
4	0.35	4.80	265	16.5	270	16.4	295	16.4		
6	0.38	6.90	415	25.9	425	25.8	465	25.7	510	25.5
8	0.41	9.05	590	37.0	610	36.9	660	36.8	730	36.6
10	0.44	11.10	785	49.1	810	49.0	880	48.8	970	48.5
12	0.48	13.20	1,020	63.7	1,050	63.6	1,140	63.3	1,260	63.0
14	0.48	15.30	1,195	74.6	1,230	74.5			1 475	73.7
16	0.54	17.40	1,525	95.2	1,570	95.0			1,880	94.0
18	0.54	19.50	1,720	107.6	1,770	107.4			2,125	106.2
20	0.57	21.60	2,015	125.9	2,075	125.7			2,485	124.2
24	0.63	25.80	2,655	166.0	2,735	165.8			3,280	164.0
30	0.79	32.00	4,120	257.6	4,240	257.1				
36	0.87	38.30	5,455	340.9						
42	0.97	44.50	7,070	442.0						
48	1.06	50.80	8,825	551.6						
Working Pressure 100 psi—231-ft Head										
3*	0.32	3.96	195	12.4	205	12.3	220	12.2		
4	0.35	4.80	265	16.5	270	16.4	295	16.4		
6	0.38	6.90	415	25.9	425	25.8	465	25.7	510	25.5
8	0.41	9.05	590	37.0	610	36.9	660	36.8	730	36.6
10	0.44	11.10	785	49.1	810	49.0	880	48.8	970	48.5
12	0.48	13.20	1,020	63.7	1,050	63.6	1,140	63.3	1,260	63.0
14	0.51	15.30	1,260	78.8	1,300	78.7			1,555	77.8
16	0.54	17.40	1,525	95.2	1,570	95.0			1,880	94.0
18	0.58	19.50	1,835	114.8	1,890	114.6			2,265	113.3
20	0.62	21.60	2,175	135.9	2,240	135.7			2,685	134.2
24	0.68	25.80	2,850	178.1	2,935	177.8			3,520	176.0
30	0.79	32.00	4,120	257.6	4,240	257.1				
36	0.87	38.30	5,455	340.9						
42	0.97	44.50	7,070	442.0						
48	1.06	50.80	8,825	551.6						
Working Pressure 150 psi—346-ft Head										
3*	0.32	3.96	195	12.4	205	12.3	220	12.2		
4	0.35	4.80	265	16.5	270	16.4	295	16.4		
6	0.38	6.90	415	25.9	425	25.8	465	25.7	510	25.5
8	0.41	9.05	590	37.0	610	36.9	660	36.8	730	36.6
10	0.44	11.10	785	49.1	810	49.0	880	48.8	970	48.5
12	0.48	13.20	1,020	63.7	1,050	63.6	1,140	63.3	1,260	63.0
14	0.51	15.30	1,260	78.8	1,300	78.7			1,555	77.8
16	0.54	17.40	1,525	95.2	1,570	95.0			1,880	94.0
18	0.58	19.50	1,835	114.8	1,890	114.6			2,265	113.3
20	0.62	21.60	2,175	135.9	2,240	135.7			2,685	134.2
24	0.73	25.80	3,040	190.1	3,130	189.8			3,760	188.0
30	0.85	32.00	4,405	275.4	4,535	274.9				
36	0.94	38.30	5,855	365.9						
42	1.05	44.50	7,605	475.3						
48	1.14	50.80	9,435	589.6						

* Pipe of 3-in. size also available in 12-ft laying length. Weight per length† is 150 lb; average weight per foot‡ 12.7 lb for all working pressures and heads.
† Including bell. Calculated weight of pipe rounded off to nearest 5 lb.
‡ Including bell. Average weight per foot based on calculated weight of pipe before rounding.

a suitable pouring basin and mounted on a suitable refractory foundation. Metal for the bars shall be obtained by using a small heated ladle taking its metal from the main ladle from which the pipe is to be poured. The metal shall be taken after all alloys and other additional metal, except cast-iron pipe scrap for cooling, have been added to the main ladle and become melted. The bars shall not be removed from the mold before they have cooled to 500°F.

8–A4.3. *Method of testing.* The bars shall be broken as beams by placing them on supports 24 in. apart and applying the load at the center of the span. The breaking load and the corresponding deflection shall be observed and recorded.

8–A4.4. *Correcting observed breaking loads and deflections.* The bars shall be measured at the point of application of the load and the results corrected to standard dimensions by the conventional beam formula (for bars of 2-in. diameter)

$$\text{Corrected } W = \text{Observed } W \times \frac{8}{d_h d_v^2}$$

$$\text{Corrected } y = \text{Observed } y \times \frac{d_v}{2}$$

in which W is the breaking load (lb); d_h, the measured horizontal diameter (in.); d_v, the measured vertical diameter (in.); and y, the deflection (in.) at breaking.

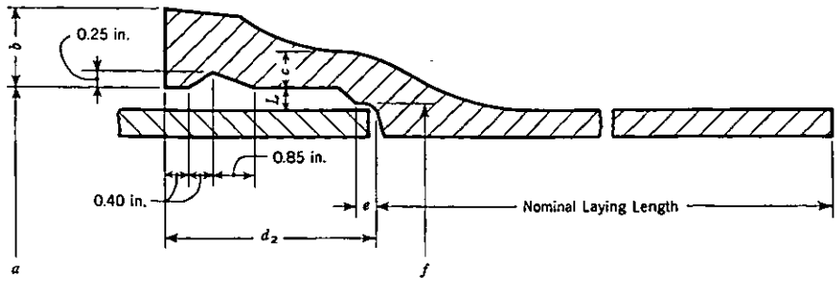

Bell-and-Spigot Pipe With Plain Ends

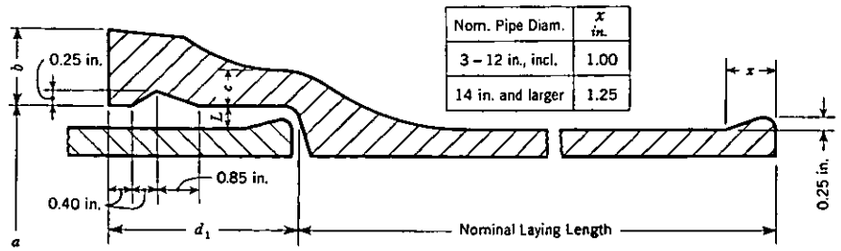

Nom. Pipe Diam.	x in.
3 – 12 in., incl.	1.00
14 in. and larger	1.25

Bell-and-Spigot Pipes With Beaded Ends

TABLE 8.1

Standard Bell-and-Spigot Joint Dimensions for Pipe Centrifugally Cast in Sand-Lined Molds*

Size	Pipe Thickness		Pipe OD†‡	Dimensions of Bells								Weight of Bell
	From	To		Socket Diam. a†	Thickness of Joint L	Socket Depth		Centering Shoulder		b§	c§	
						d_1	d_2	Depth e	ID f†			
	in.											b
3	0.32	0.38	3.96	4.76	0.40	3.50	3.30	0.30	4.10	1.25	0.52	15
4	0.35	0.44	4.80	5.60	0.40	3.50	3.30	0.30	4.94	1.30	0.55	19
6	0.38	0.41	6.90	7.70	0.40	3.50	3.88	0.38	7.06	1.35	0.48	26
	0.44	0.52	6.90	7.70	0.40	3.50	3.88	0.38	7.06	1.35	0.64	29
8	0.41	0.44	9.05	9.85	0.40	4.00	4.38	0.38	9.21	1.45	0.52	37
	0.48	0.60	9.05	9.85	0.40	4.00	4.38	0.38	9.21	1.45	0.68	43
10	0.44	0.48	11.10	11.90	0.40	4.00	4.38	0.38	11.28	1.55	0.56	50
	0.52	0.65	11.10	11.90	0.40	4.00	4.38	0.38	11.28	1.55	0.73	56
12	0.48	0.52	13.20	14.00	0.40	4.00	4.38	0.38	13.38	1.60	0.60	63
	0.56	0.70	13.20	14.00	0.40	4.00	4.38	0.38	13.38	1.60	0.79	71
	0.76		13.20	14.00	0.40	4.00	4.38	0.38	13.38	1.60	0.95	79

* May be furnished with plain ends or beaded ends at the manufacturer's option.
† Tolerances for outside diameter of spigot ends, socket diameter *a*, and centering shoulder inside diameter *f* shall be ±0.06 in. for sizes 3–12 in.; ±0.08 in. for sizes 14–24 in.; ±0.10 in. for sizes 30–36 in.; and ±0.12 in. for sizes 42–48 in.
‡ For pipe with outside diameters other than the standard diameters shown in this table, consult the manufacturer.
§ For tolerances, see Sec. 8-7.2.

TABLE 8.2—*(contd.)*

Standard Thickness Classes, Thicknesses, Diameters, and Weights of Bell-and-Spigot Pipe Centrifugally Cast in Sand-Lined Molds

Size in.	Thickness Class†	Thickness	OD	ID	Weight of Barrel per Foot	Weight of Bell	Weight Based on 16-ft Laying Length		Weight Based on 16½-ft Laying Length		Weight Based on 18-ft Laying Length		Weight Based on 20-ft Laying Length	
							Per Length‡	Avg. per Foot§	Per Length‡	Avg. per Foot§	Per Length‡	Avg. per Foot§	Per Length‡	Avg. per Foot§
		in.			lb									
36	21	0.81	38.30	36.68	297.7	347	5,110	319.4						
	22	0.87	38.30	36.56	319.2	347	5,455	340.9						
	23	0.94	38.30	36.42	344.2	347	5,855	365.9						
	24	1.02	38.30	36.26	372.7	390	6,355	397.1						
	25	1.10	38.30	36.10	401.1	390	6,810	425.5						
	26	1.19	38.30	35.92	432.9	390	7,315	457.3						
	27	1.29	38.30	35.72	468.0	445	7,935	495.8						
	28	1.39	38.30	35.52	502.9	445	8,490	530.7						
42	21	0.90	44.50	42.70	384.6	450	6,605	412.7						
	22	0.97	44.50	42.56	413.9	450	7,070	442.0						
	23	1.05	44.50	42.40	447.2	450	7,605	475.3						
	24	1.13	44.50	42.24	480.4	510	8,195	512.3						
	25	1.22	44.50	42.06	517.6	510	8,790	549.5						
	26	1.32	44.50	41.86	558.7	510	9,450	590.6						
	27	1.43	44.50	41.64	603.7	585	10,245	640.3						
	28	1.54	44.50	41.42	648.5	585	10,960	685.1						
48	21	0.98	50.80	48.84	478.6	556	8,215	513.4						
	22	1.06	50.80	48.68	516.8	556	8,825	551.6						
	23	1.14	50.80	48.52	554.9	556	9,435	589.6						
	24	1.23	50.80	48.34	597.6	634	10,195	637.2						
	25	1.33	50.80	48.14	644.9	634	10,950	684.5						
	26	1.44	50.80	47.92	696.7	634	11,780	736.3						
	27	1.56	50.80	47.68	752.9	735	12,780	798.8						
	28	1.68	50.80	47.44	808.9	735	13,675	854.8						

† Heavier thickness classes can be furnished when specified.
‡ Including bell. Calculated weight of pipe rounded off to nearest 5 lb.
§ Including bell. Average weight per foot based on calculated weight of pipe before rounding.

TABLE 8.2—(*contd.*)

Standard Thickness Classes, Thicknesses, Diameters, and Weights of Bell-and-Spigot Pipe Centrifugally Cast in Sand-Lined Molds

Size *in.*	Thickness Class†	Thickness	OD	ID	Weight of Barrel per Foot	Weight of Bell	Weight Based on 16-ft Laying Length		Weight Based on 16½-ft Laying Length		Weight Based on 18-ft Laying Length		Weight Based on 20-ft Laying Length	
							Per Length‡	Avg. per Foot§	Per Length‡	Avg. per Foot§	Per Length‡	Avg. per Foot§	Per Length‡	Avg. per Foot§
		in.			*lb*									
18	21	0.54	19.50	18.42	100.4	115	1,720	107.6	1,770	107.4			2,125	106.2
	22	0.58	19.50	18.34	107.6	115	1,835	114.8	1,890	114.6			2,265	113.3
	23	0.63	19.50	18.24	116.5	115	1,980	123.7	2,035	123.4			2,445	122.2
	24	0.68	19.50	18.14	125.4	128	2,135	133.4	2,195	133.1			2,635	131.7
	25	0.73	19.50	18.04	134.3	128	2,275	142.3	2,345	142.1			2,815	140.7
	26	0.79	19.50	17.92	144.9	128	2,445	152.9	2,520	152.7			3,025	151.3
	27	0.85	19.50	17.80	155.4	128	2,615	163.4	2,690	163.1			3,235	161.8
	28	0.92	19.50	17.66	167.5	143	2,825	176.5	2,905	176.2			3,495	174.7
20	21	0.57	21.60	20.46	117.5	135	2,015	125.9	2,075	125.7			2,485	124.2
	22	0.62	21.60	20.36	127.5	135	2,175	135.9	2,240	135.7			2,685	134.2
	23	0.67	21.60	20.26	137.5	135	2,335	145.9	2,405	145.7			2,885	144.2
	24	0.72	21.60	20.16	147.4	149	2,505	156.7	2,580	156.4			3,095	154.7
	25	0.78	21.60	20.04	159.2	149	2,695	168.5	2,775	168.2			3,335	166.7
	26	0.84	21.60	19.92	170.9	149	2,885	180.2	2,970	179.9			3,565	178.3
	27	0.91	21.60	19.78	184.5	149	3,100	193.8	3,195	193.5			3,840	191.9
	28	0.98	21.60	19.64	198.1	168	3,340	208.6	3,435	208.3			4,130	206.5
24	21	0.63	25.80	24.54	155.4	171	2,655	166.0	2,735	165.8			3,280	164.0
	22	0.68	25.80	24.44	167.4	171	2,850	178.1	2,935	177.8			3,520	176.0
	23	0.73	25.80	24.34	179.4	171	3,040	190.1	3,130	189.8			3,760	188.0
	24	0.79	25.80	24.22	193.7	191	3,290	205.6	3,385	205.3			4,065	203.2
	25	0.85	25.80	24.10	207.9	191	3,515	219.8	3,620	219.5			4,350	217.5
	26	0.92	25.80	23.96	224.4	191	3,780	236.3	3,895	236.0			4,680	234.0
	27	0.99	25.80	23.82	240.8	218	4,070	254.4	4,190	254.0			5,035	251.8
	28	1.07	25.80	23.66	259.4	218	4,370	273.0	4,500	272.6			5,405	270.2
30	21	0.73	32.00	30.54	223.7	254	3,835	239.6	3,945	239.1				
	22	0.79	32.00	30.42	241.7	254	4,120	257.6	4,240	257.1				
	23	0.85	32.00	30.30	259.5	254	4,405	275.4	4,535	274.9				
	24	0.92	32.00	30.16	280.3	280	4,765	297.8	4,905	297.3				
	25	0.99	32.00	30.02	300.9	280	5,095	318.4	5,245	317.9				
	26	1.07	32.00	29.86	324.4	280	5,470	341.9	5,635	341.4				
	27	1.16	32.00	29.68	350.7	318	5,930	370.6	6,105	370.0				
	28	1.25	32.00	29.50	376.8	318	6,345	396.7	6,535	396.1				

† Heavier thickness classes can be furnished when specified.
‡ Including bell. Calculated weight of pipe rounded off to nearest 5 lb.
§ Including bell. Average weight per foot based on calculated weight of pipe before rounding.

TABLE 8.1 (*contd.*)

Standard Bell-and-Spigot Joint Dimensions for Pipe Centrifugally Cast in Sand-Lined Molds*

Size	Pipe Thickness		Dimensions of Bells									Weight of Bell
	From	To	Pipe OD†‡	Socket Diam. d_1	Thickness of Joint L	Socket Depth d_1	Socket Depth d_2	Centering Shoulder Depth e	Centering Shoulder ID f_1	b§	c§	
			in.									*lb*
14	0.48	0.55	15.30	16.10	0.40	4.00	4.50	0.50	15.52	1.70	0.64	79
	0.59	0.75	15.30	16.10	0.40	4.00	4.50	0.50	15.52	1.70	0.85	88
	0.81		15.30	16.10	0.40	4.00	4.50	0.50	15.52	1.70	1.01	97
16	0.50	0.58	17.40	18.40	0.50	4.00	4.50	0.50	17.62	1.75	0.67	96
	0.63	0.79	17.40	18.40	0.50	4.00	4.50	0.50	17.62	1.75	0.89	108
	0.85		17.40	18.40	0.50	4.00	4.50	0.50	17.62	1.75	1.06	120
18	0.54	0.63	19.50	20.50	0.50	4.00	4.50	0.50	19.72	1.80	0.72	115
	0.68	0.85	19.50	20.50	0.50	4.00	4.50	0.50	19.72	1.80	0.95	128
	0.92		19.50	20.50	0.50	4.00	4.50	0.50	19.72	1.80	1.14	143
20	0.57	0.67	21.60	22.60	0.50	4.00	4.50	0.50	21.82	1.90	0.76	135
	0.72	0.91	21.60	22.60	0.50	4.00	4.50	0.50	21.82	1.90	1.01	149
	0.98		21.60	22.60	0.50	4.00	4.50	0.50	21.82	1.90	1.21	168
24	0.63	0.73	25.80	26.80	0.50	4.00	4.50	0.50	26.02	2.05	0.85	171
	0.79	0.92	25.80	26.80	0.50	4.00	4.50	0.50	26.02	2.05	1.04	191
	0.99	1.07	25.80	26.80	0.50	4.00	4.50	0.50	26.02	2.05	1.29	218
30	0.73	0.85	32.00	33.00	0.50	4.50				2.25	0.97	254
	0.92	1.07	32.00	33.00	0.50	4.50				2.25	1.20	280
	1.16	1.25	32.00	33.00	0.50	4.50				2.25	1.49	318
36	0.81	0.94	38.30	39.30	0.50	4.50				2.45	1.09	347
	1.02	1.19	38.30	39.30	0.50	4.50				2.45	1.35	390
	1.29	1.39	38.30	39.30	0.50	4.50				2.45	1.67	445
42	0.90	1.05	44.50	45.50	0.50	5.00				2.65	1.20	450
	1.13	1.32	44.50	45.50	0.50	5.00				2.65	1.48	510
	1.43	1.54	44.50	45.50	0.50	5.00				2.65	1.83	585
48	0.98	1.14	50.80	51.80	0.50	5.00				2.85	1.29	556
	1.23	1.44	50.80	51.80	0.50	5.00				2.85	1.61	634
	1.56	1.68	50.80	51.80	0.50	5.00				2.85	1.99	735

* May be furnished with plain ends or beaded ends at the manufacturer's option.
† Tolerances for outside diameter of spigot ends, socket diameter d_1 and centering shoulder inside diameter f shall be ±0.06 in. for sizes 3–12 in.; ±0.08 in. for sizes 14–24 in.; +0.10 in. for sizes 30–36 in.; and ±0.12 in. for sizes 42–48 in.
‡ For pipe with outside diameters other than the standard diameters shown in this table, consult the manufacturer.
§ For tolerances, see Sec. 8–7.2.

TABLE 8.2

Standard Thickness Classes, Thicknesses, Diameters, and Weights of Bell-and-Spigot Pipe Centrifugally Cast in Sand-Lined Molds

Size *in.*	Thickness Class†	Thickness	OD	ID	Weight of Barrel per Foot	Weight of Bell	Weight Based on 16-ft Laying Length		Weight Based on 16½-ft Laying Length		Weight Based on 18-ft Laying Length		Weight Based on 20-ft Laying Length	
							Per Length‡	Avg. per Foot§	Per Length‡	Avg. per Foot§	Per Length‡	Avg. per Foot§	Per Length‡	Avg. per Foot§
		in.			*lb*									
3*	22	0.32	3.96	3.32	11.4	15	195	12.4	205	12.3	220	12.2		
	23	0.35	3.96	3.26	12.4	15	215	13.4	220	13.3	240	13.2		
	24	0.38	3.96	3.20	13.3	15	230	14.3	235	14.2	255	14.1		
4	22	0.35	4.80	4.10	15.3	19	265	16.5	270	16.4	295	16.4		
	23	0.38	4.80	4.04	16.5	19	285	17.7	290	17.6	315	17.6		
	24	0.41	4.80	3.98	17.6	19	300	18.8	310	18.7	335	18.7		
	25	0.44	4.80	3.92	18.8	19	320	20.0	330	19.9	355	19.8		
6	22	0.38	6.90	6.14	24.3	26	415	25.9	425	25.8	465	25.7	510	25.5
	23	0.41	6.90	6.08	26.1	26	445	27.7	455	27.6	495	27.5	550	27.4
	24	0.44	6.90	6.02	27.9	29	475	29.7	490	29.6	530	29.5	585	29.2
	25	0.48	6.90	5.94	30.2	29	510	32.0	525	31.9	575	31.9	635	31.6
	26	0.52	6.90	5.86	32.5	29	550	34.3	565	34.3	615	34.1	680	33.9
8	22	0.41	9.05	8.23	34.7	37	590	37.0	610	36.9	660	36.8	730	36.6
	23	0.44	9.05	8.17	37.1	37	630	39.5	650	39.4	705	39.2	780	39.0
	24	0.48	9.05	8.09	40.3	43	690	43.0	710	42.9	770	42.7	850	42.4
	25	0.52	9.05	8.01	43.5	43	740	46.2	760	46.1	825	45.9	915	45.7
	26	0.56	9.05	7.93	46.6	43	790	49.3	810	49.2	880	49.0	975	48.8
	27	0.60	9.05	7.85	49.7	43	840	52.4	865	52.3	940	52.1	1,035	51.8
10	22	0.44	11.10	10.22	46.0	50	785	49.1	810	49.0	880	48.8	970	48.5
	23	0.48	11.10	10.14	50.0	50	850	53.1	875	53.0	950	52.8	1,050	52.5
	24	0.52	11.10	10.06	53.9	56	920	57.4	945	57.3	1,025	57.0	1,135	56.7
	25	0.56	11.10	9.98	57.9	56	980	61.4	1,010	61.3	1,100	61.0	1,215	60.7
	26	0.60	11.10	9.90	61.8	56	1,045	65.3	1,075	65.2	1,170	64.9	1,290	64.6
	27	0.65	11.10	9.80	66.6	56	1,120	70.1	1,155	70.0	1,255	69.7	1,390	69.4

* Pipe of 3-in. size also available in 12-ft laying length. Weight (lb) per length‡ for thickness class 22 is 150; for 23, 165; for 24, 175. Average weight (lb) per foot§ for thickness class 22 is 12.7; for 23, 13.7; for 24, 14.6.
† Heavier thickness classes can be furnished when specified.
‡ Including bell. Calculated weight of pipe rounded off to nearest 5 lb.
§ Including bell. Average weight per foot based on calculated weight of pipe before rounding.

TABLE 8.2—(*contd.*)

Standard Thickness Classes, Thicknesses, Diameters, and Weights of Bell-and-Spigot Pipe Centrigufally Cast in Sand-Lined Molds

Size *in.*	Thickness Class†	Thickness	OD	ID	Weight of Barrel per Foot	Weight of Bell	Weight Based on 16-ft Laying Length		Weight Based on 16½-ft Laying Length		Weight Based on 18-ft Laying Length		Weight Based on 20-ft Laying Length	
							Per Length‡	Avg. per Foot§	Per Length‡	Avg. per Foot§	Per Length‡	Avg. per Foot§	Per Length‡	Avg. per Foot§
		in.			*lb*									
12	22	0.48	13.20	12.24	59.8	63	1,020	63.7	1,050	63.6	1,140	63.3	1,260	63.0
	23	0.52	13.20	12.16	64.6	63	1,095	68.5	1,130	68.4	1,225	68.1	1,355	67.8
	24	0.56	13.20	12.08	69.4	71	1,180	73.8	1,215	73.7	1,320	73.3	1,460	73.0
	25	0.60	13.20	12.00	74.1	71	1,255	78.5	1,295	78.4	1,405	78.0	1,555	77.7
	26	0.65	13.20	11.90	80.0	71	1,350	84.4	1,390	84.3	1,510	83.9	1,670	83.6
	27	0.70	13.20	11.80	85.8	71	1,445	90.2	1,485	90.1	1,615	89.7	1,785	89.3
	28	0.76	13.20	11.68	92.7	79	1,560	97.6	1,610	97.5	1,750	97.1	1,935	96.7
14	21	0.48	15.30	14.34	69.7	79	1,195	74.6	1,230	74.5			1,475	73.7
	22	0.51	15.30	14.28	73.9	79	1,260	78.8	1,300	78.7			1,555	77.8
	23	0.55	15.30	14.20	79.5	79	1,350	84.4	1,390	84.3			1,670	83.4
	24	0.59	15.30	14.12	85.1	88	1,450	90.6	1,490	90.4			1,790	89.4
	25	0.64	15.30	14.02	92.0	88	1,560	97.5	1,605	97.3			1,930	96.4
	26	0.69	15.30	13.92	98.8	88	1,670	104.3	1,720	104.1			2,065	103.2
	27	0.75	15.30	13.80	107.0	88	1,800	112.5	1,855	112.3			2,230	111.4
	28	0.81	15.30	13.68	115.0	97	1,935	121.0	1,995	120.9			2,395	119.8
16	21	0.50	17.40	16.40	82.8	96	1,420	88.8	1,460	88.6			1,750	87.6
	22	0.54	17.40	16.32	89.2	96	1,525	95.2	1,570	95.0			1,880	94.0
	23	0.58	17.40	16.24	95.6	96	1,625	101.6	1,675	110.4			2,010	100.4
	24	0.63	17.40	16.14	103.6	108	1,765	110.4	1,815	110.1			2,180	108.9
	25	0.68	17.40	16.04	111.4	108	1,890	118.2	1,945	117.9			2,335	116.7
	26	0.73	17.40	15.94	119.3	108	2,015	126.0	2,075	125.8			2,495	124.7
	27	0.79	17.40	15.82	128.6	108	2,165	135.4	2,230	135.1			2,680	134.0
	28	0.85	17.40	15.70	137.9	120	2,325	145.4	2,395	145.2			2,880	143.9

† Heavier thickness classes can be furnished when specified.
‡ Including bell. Calculated weight of pipe rounded off to nearest 5 lb.
§ Including bell. Average wight per foot based on calculated weight of pipe before rounding.

ASA A21.10
(AWWA C110)

AMERICAN STANDARD FOR CAST-IRON FITTINGS, 2-IN. THROUGH 48-IN., FOR WATER AND OTHER LIQUIDS

For old-style fittings, see AWWA C100-55. This document presents in slightly revised form the "special castings" portion of "Standard Specifications for CAST-IRON WATER PIPES and SPECIAL CASTINGS—7C.1-1908," which was adopted by AWWA on May 12, 1908. Although it has been superseded for new installations by various American Standards for cast-iron pipe and fittings, it is still valid as a basis for replacing fittings in existing pipe lines.

ASA A21.10

UDC 621.774.1

ASA A21.10-1964
(AWWA C110-64)
Revision of A21.10-1952
(AWWA C110-52)

AMERICAN STANDARD

for

CAST-IRON FITTINGS, 2 in. THROUGH 48 in., FOR WATER AND OTHER LIQUIDS

PUBLISHED BY AMERICAN WATER WORKS ASSOCIATION, INC.

SPONSORS

American Gas Association
American Society for Testing and Materials
American Water Works Association
New England Water Works Association

Approved by American Standards Association Jun. 9, 1964

AMERICAN WATER WORKS ASSOCIATION
Incorporated
2 Park Avenue, New York, N.Y. 10016

2P—17M—12/65

TABLE 10.28

Flanged Reducers

Size—in. Large	Size—in. Small	Pressure Rating psi	Iron Strength psi (1,000's)	Dimensions—in. T	Dimensions—in. T_1	Dimensions—in. L	Wgt. lb
3	2	250	25	0.48	0.35	6	16
4	2	250	25	0.52	0.35	7	25
4	3	250	25	0.52	0.48	7	30
6	2	250	25	0.55	0.35	9	30
6	3	250	25	0.55	0.48	9	40
6	4	250	25	0.55	0.52	9	45
8	4	250	25	0.60	0.52	11	65
8	6	250	25	0.60	0.55	11	75
10	4	250	25	0.68	0.52	12	85
10	6	250	25	0.68	0.55	12	90
10	8	250	25	0.68	0.60	12	110
12	4	250	25	0.75	0.52	14	120
12	6	250	25	0.75	0.55	14	130
12	8	250	25	0.75	0.60	14	145
12	10	250	25	0.75	0.68	14	170
14	6	150	25	0.66	0.55	16	155
14	6	250	25	0.82	0.55	16	165
14	6	250	DI*	0.66	0.55	16	155
14	8	150	25	0.66	0.60	16	175
14	8	250	25	0.82	0.60	16	185
14	8	250	DI	0.66	0.60	16	175
14	10	150	25	0.66	0.68	16	190
14	10	250	25	0.82	0.68	16	205
14	10	250	DI	0.66	0.68	16	190
14	12	150	25	0.66	0.75	16	220
14	12	250	25	0.82	0.75	16	235
14	12	250	DI	0.66	0.75	16	220
16	6	150	30	0.70	0.55	18	190
16	6	250	30	0.89	0.55	18	210
16	6	250	DI	0.70	0.55	18	190
16	8	150	30	0.70	0.60	18	210
16	8	250	30	0.89	0.60	18	230
16	8	250	DI	0.70	0.60	18	210
16	10	150	30	0.70	0.68	18	235
16	10	250	30	0.89	0.68	18	255
16	10	250	DI	0.70	0.68	18	235
16	12	150	30	0.70	0.75	18	265
16	12	250	30	0.89	0.75	18	285
16	12	250	DI	0.70	0.75	18	265
16	14	150	30	0.70	0.66	18	280
16	14	250	30	0.89	0.82	18	315
16	14	250	DI	0.70	0.66	18	280
18	8	150	30	0.75	0.60	19	240
18	8	250	30	0.96	0.60	19	265
18	8	250	DI	0.75	0.60	19	240
18	10	150	30	0.75	0.68	19	265
18	10	250	30	0.96	0.68	19	290
18	10	250	DI	0.75	0.68	19	265
18	12	150	30	0.75	0.75	19	295
18	12	250	30	0.96	0.75	19	320
18	12	250	DI	0.75	0.75	19	295
18	14	150	30	0.75	0.66	19	310
18	14	250	30	0.96	0.82	19	350
18	14	250	DI	0.75	0.66	19	310
18	16	150	30	0.75	0.70	19	340
18	16	250	30	0.96	0.89	19	385
18	16	250	DI	0.75	0.70	19	340
20	10	150	30	0.80	0.68	20	310
20	10	250	30	1.03	0.68	20	340
20	10	250	DI	0.80	0.68	20	310
20	12	150	30	0.80	0.75	20	345
20	12	250	30	1.03	0.75	20	375
20	12	250	DI	0.80	0.75	20	345
20	14	150	30	0.80	0.66	20	355
20	14	250	30	1.03	0.82	20	405
20	14	250	DI	0.80	0.66	20	355
20	16	150	30	0.80	0.70	20	390
20	16	250	30	1.03	0.89	20	445
20	16	250	DI	0.80	0.70	20	390
20	18	150	30	0.80	0.75	20	410
20	18	250	30	1.03	0.96	20	470
20	18	250	DI	0.80	0.75	20	410
24	12	150	30	0.89	0.75	24	480
24	12	250	30	1.16	0.75	24	535
24	12	250	DI	0.89	0.75	24	480
24	14	150	30	0.89	0.66	24	490
24	14	250	30	1.16	0.82	24	565
24	14	250	DI	0.89	0.66	24	490
24	16	150	30	0.89	0.70	24	525
24	16	250	30	1.16	0.89	24	610
24	16	250	DI	0.89	0.70	24	525
24	18	150	30	0.89	0.75	24	550
24	18	250	30	1.16	0.96	24	645
24	18	250	DI	0.89	0.75	24	550
24	20	150	30	0.89	0.80	24	590
24	20	250	30	1.16	1.03	24	695
24	20	250	DI	0.89	0.80	24	590
30	18	150	30	1.03	0.75	30	810
30	18	250	30	1.37	0.96	30	970
30	18	250	DI	1.03	0.75	30	810
30	20	150	30	1.03	0.80	30	870
30	20	250	30	1.37	1.03	30	1,035
30	20	250	DI	1.03	0.80	30	870
30	24	150	30	1.03	0.89	30	970
30	24	250	30	1.37	1.16	30	1,155
30	24	250	DI	1.03	0.89	30	970
36	20	150	30	1.15	0.80	36	1,230
36	20	250	30	1.58	1.03	36	1,495
36	20	250	DI	1.15	0.80	36	1,230
36	24	150	30	1.15	0.89	36	1,345
36	24	250	30	1.58	1.16	36	1,635
36	24	250	DI	1.15	0.89	36	1,345
36	30	150	30	1.15	1.03	36	1,555
36	30	250	30	1.58	1.37	36	1,905
36	30	250	DI	1.15	1.03	36	1,555
42	24	150	30	1.28	0.89	42	1,820
42	24	250	30	1.78	1.16	42	2,235
42	24	250	DI	1.28	0.89	42	1,820
42	30	150	30	1.28	1.03	42	2,060
42	30	250	30	1.78	1.37	42	2,555
42	30	250	DI	1.28	1.03	42	2,060
42	36	150	30	1.28	1.15	42	2,345
42	36	250	30	1.78	1.58	42	2,935
42	36	250	DI	1.28	1.15	42	2,345
48	30	150	30	1.42	1.03	48	2,625
48	30	250	30	1.96	1.37	48	3,270
48	30	250	DI	1.42	1.03	48	2,625
48	36	150	30	1.42	1.15	48	2,950
48	36	250	30	1.96	1.58	48	3,710
48	36	250	DI	1.42	1.15	48	2,950
48	42	150	30	1.42	1.28	48	3,320
48	42	250	30	1.96	1.78	48	4,190
48	42	250	DI	1.42	1.28	48	3,320

Dimension details of flanges are given in Table 10.23. Eccentric reducers with the same dimensions and weights given for concentric reducers are available from most manufacturers if specified on the purchase order.

* Ductile iron.

American Standard

An American Standard implies a consensus of those substantially concerned with its scope and provisions. The consensus principle extends to the initiation of work under the procedure of the American Standards Association, to the method of work to be followed, and to the final approval of the standard.

An American Standard is intended as a guide to aid the manufacturer, the consumer, and the general public. The existence of an American Standard does not in any respect preclude any party who has approved of the standard from manufacturing, selling, or using products, processes, or procedures not conforming to the standard.

An American Standard defines a product, process, or procedure with reference to one or more of the following: nomenclature, composition, construction, dimensions, tolerances, safety, operating characteristics, performance, quality, rating, certification, testing, and the service for which designed.

American Standards are subject to periodic review. They are reaffirmed or revised to meet changing economic conditions and technologic progress. Users of American Standards are cautioned to secure the latest editions.

Producers of goods made in conformity with an American Standard are encouraged to state on their own responsibility in advertising, promotion materials, or on tags or labels, that the goods are produced in conformity with particular American Standards. The inclusion in such advertising and promotion media, or on tags or labels, of information concerning the characteristics covered by the standard to define its scope is also encouraged.

Committee Personnel

Subcommittee 3, which reviewed A21.10–1952 and developed this revision, had the following personnel at that time:

HERBERT W. STUART, *Chairman*
S. LOGAN KERR, *Vice-Chairman*

User Members	*Producer Members*
JOHN W. CARROLL	CARL A. HENRIKSON
RICHMOND C. HOLCOMBE	L. HUNTER PHILLIPS
VANCE C. LISCHER	LLOYD C. MCNEILL
ROY RUGGLES	EDWARD C. SEARS
ARTHUR RYNDERS	
RUSSELL A. SEIFERT (*deceased*)	

Sectional Committee A21 on cast-iron pipe and fittings, which reviewed and approved this revision, had the following personnel at the time of approval:

EDWIN B. COBB, *Chairman*
HERBERT W. STUART, *Vice-Chairman*
JAMES B. RAMSEY, *Secretary*

Organization Represented	*Name of Representative*
American Gas Association	RICHMOND C. HOLCOMBE
American Society of Civil Engineers	KENNETH W. HENDERSON
American Society of Mechanical Engineers	LOUIS R. HOWSON
American Society for Testing and Materials	HARRY P. HAGEDORN
American Water Works Association	S. LOGAN KERR
Cast Iron Pipe Research Association	WALLACE T. MILLER
	HERBERT W. STUART
	J. THOMPSON VANN
Manufacturers' Standardization Society of the Valve and Fittings Industry	E. J. BARTHOLET
New England Water Works Association	EDWIN B. COBB
Standardization Division, General Services Administration	
Member at Large	ROLF H. JENSEN

TABLE 10.27—*Flanged Base Fittings (contd.)*

Size *in.*	Pressure Rating *psi*	Iron Strength *psi* (*1,000's*)	Dimensions—*in.*				Weight—*lb*	
			R†	*S* Diam.	*T*	*U*	Base Fitting	Base Only
Flanged Base Bends								
2	250	25	4.12	4.62	0.50	0.50	19	5
3	250	25	4.88	5.00	0.56	0.50	35	10
4	250	25	5.50	6.00	0.62	0.50	55	10
6	250	25	7.00	7.00	0.69	0.62	85	20
8	250	25	8.38	9.00	0.94	0.88	145	40
10	250	25	9.75	9.00	0.94	0.88	210	45
12	250	25	11.25	11.00	1.00	1.00	300	65
14	150	25	12.50	11.00	1.00	1.00	360	70
14	250	25	12.50	11.00	1.00	1.00	400	70
14	250	DI*	12.50	11.00	1.00	1.00	360	70
16	150	30	13.75	11.00	1.00	1.00	445	75
16	250	30	13.75	11.00	1.00	1.00	505	75
16	250	DI	13.75	11.00	1.00	1.00	445	75
18	150	30	15.00	13.50	1.12	1.12	565	115
18	250	30	15.00	13.50	1.12	1.12	645	115
18	250	DI	15.00	13.50	1.12	1.12	565	115
20	150	30	16.00	13.50	1.12	1.12	700	120
20	250	30	16.00	13.50	1.12	1.12	805	120
20	250	DI	16.00	13.50	1.12	1.12	700	120
24	150	30	18.50	13.50	1.12	1.12	1,030	130
24	250	30	18.50	13.50	1.12	1.12	1,215	130
24	250	DI	18.50	13.50	1.12	1.12	1,030	130
30	150	30	23.00	16.00	1.19	1.15	1,625	190
30	250	30	23.00	16.00	1.19	1.15	1,945	190
30	250	DI	23.00	16.00	1.19	1.15	1,625	190
36	150	30	26.00	19.00	1.25	1.15	2,385	250
36	250	30	26.00	19.00	1.25	1.15	2,940	250
36	250	DI	26.00	19.00	1.25	1.15	2,385	250
42	150	30	30.00	23.50	1.44	1.28	3,465	410
42	250	30	30.00	23.50	1.44	1.28	4,290	410
42	250	DI	30.00	23.50	1.44	1.28	3,465	410
48	150	30	34.00	25.00	1.56	1.42	4,610	515
48	250	30	34.00	25.00	1.56	1.42	5,725	515
48	250	DI	34.00	25.00	1.56	1.42	4,610	515

† Dimension *R* is a finished dimension; unfinished bases will be ⅛ in. longer; details for base drilling are given in Table 10.24.
* Ductile iron.

Fig. 10.27. Flanged Base Bends and Tees (See Table 10.27)

For flanged-bend dimensions, see Table 10.25; for other flanged-tee dimensions, see Table 10.26.

TABLE 10.27

Flanged Base Fittings

Size *in.*	Pressure Rating *psi*	Iron Strength *psi* (*1,000's*)	Dimensions—*in.*				Weight—*lb*	
			R†	*S* Diam.	*T*	*U*	Base Fitting	Base Only
Flanged Base Tees								
2	250	25	4.12	4.62	0.50	0.50	25	5
3	250	25	4.88	5.00	0.56	0.50	45	5
4	250	25	5.50	6.00	0.62	0.50	75	10
6	250	25	7.00	7.00	0.69	0.62	110	15
8	250	25	8.38	9.00	0.94	0.88	185	30
10	250	25	9.75	9.00	0.94	0.88	300	30
12	250	25	11.25	11.00	1.00	1.00	430	45
14	150	25	12.50	11.00	1.00	1.00	550	50
14	250	30	12.50	11.00	1.00	1.00	550	50
14	250	DI*	12.50	11.00	1.00	1.00	485	50
16	150	30	13.75	11.00	1.00	1.00	685	50
16	250	35	13.75	11.00	1.00	1.00	685	50
16	250	DI	13.75	11.00	1.00	1.00	600	50
18	150	30	15.00	13.50	1.12	1.12	860	75
18	250	35	15.00	13.50	1.12	1.12	860	75
18	250	DI	15.00	13.50	1.12	1.12	740	75
20	150	35	16.00	13.50	1.12	1.12	1,080	75
20	250	DI	16.00	13.50	1.12	1.12	930	75
24	150	35	18.50	13.50	1.12	1.12	1,665	80
24	250	DI	18.50	13.50	1.12	1.12	1,410	80
30	150	35	23.00	16.00	1.19	1.15	2,735	120
30	250	DI	23.00	16.00	1.19	1.15	2,270	120
36	150	35	26.00	19.00	1.25	1.15	4,090	160
36	250	DI	26.00	19.00	1.25	1.15	3,320	160
42	150	DI	30.00	23.50	1.44	1.28	4,740	270
42	250	DI	30.00	23.50	1.44	1.28	5,850	270
48	150	DI	34.00	25.00	1.56	1.42	6,235	335
48	250	DI	34.00	25.00	1.56	1.42	7,720	335

† Dimension *R* is a finished dimension; unfinished bases will be ½ in. longer; details for base drilling are given in Table 10.24.
* Ductile iron.

Table of Contents

SEC.	PAGE
10–1—Scope	1
10–2—Definitions	1
10–3—General Requirements	1
10–4—Inspection and Certification by Manufacturer	1
10–5—Inspection by Purchaser	2
10–6—Delivery and Acceptance	2
10–7—Tolerances or Permitted Variations	2
10–8—Coatings and Linings	2
10–9—Marking on Fittings	3
10–10—Acceptance Tests	3
10–11—Chemical Analyses of Gray-Iron Fittings	4
10–12—Additional Tests Required by Purchaser	4
10–13—Defective Specimens and Retests	4
Index to Tables	5

Foreword

This foreword is not a part of A21.10 American Standard for Cast-Iron Fittings, 2 in. Through 48 in., for Water and Other Liquids.

As part of the activities of the reorganized ASA Sectional Committee A21 (Cast-Iron Pipe and Fittings), various subcommittees were set up to handle the different aspects of the standard for such materials.

Subcommittee 3 was charged with the examination of the existing standards for cast-iron fittings and was made responsible for the development of any new standards or revisions of old standards that might be necessary as determined by their review and other studies.

The assignment of Subcommittee 3 was limited to cast-iron fittings for cast-iron pipe; thus, cast-iron fittings used or adapted to pipe of materials other than cast iron were excluded from consideration.

History

The earliest record of an AWWA standard for cast-iron pipe is contained in the *Proceedings* for 1890 and consists of a proposed standard and specifications. Three pipe classifications, A, B, and C, were designated. Class B pipe was used as a standard on the basis of weight as determined from average weight used in a large number of United States cities and towns.

Class A pipe was defined as weighing 10 per cent less than Class B, and Class C pipe as weighing 10 per cent more. Standard length was 12 ft, the material was "neutral" pig iron, and the pipe was cast in vertical molds. Test bars and pressure tests were required, cleaning and coating of the pipe were described, and a further test called for a series of smart blows at various points throughout its length with a 3-lb hammer attached to a handle 16 in. long.

In this standard the subject of fittings was dealt with in a single section in the following words:

All special castings, such as "ells," "tees," "wyes," bends, crosses, etc., shall be made from the same mixture of pig iron as has been approved for pipe; and all such casting shall be submitted to the same care in cleaning and heating, and the bath shall be used under the same conditions as for straight pipe.

A more detailed standard was adopted by NEWWA, Sep. 10, 1902, Sec. 5 of which provided that special castings be made in accordance with a series of tables of dimensions and Sec. 19 that the pipe and other castings (fittings) be in all respects sound and conformable to these specifications.

The next AWWA standard for fittings, C100–08, was approved May 12, 1908. A second edition, C100–52T, was approved by AWWA Dec. 31, 1952, and by NEWWA Jan. 22, 1953. The third edition, C100–54T, was approved by AWWA, Oct. 25, 1954, and finally issued as C100–55, having been advanced from tentative to standard without change on Jun. 17, 1955.

Standard C100–55 covered fittings in the size range of 4 in. to 60 in., which were all of the so-called long-radius design.

The principal difference between C100–08 and C100–55 apparently rests in the quality of the iron, which has been increased in tensile strength from 20,000 to 25,000 psi, owing to new and improved foundry practices.

TABLE 10.26—*Flanged Tees and Crosses (contd.)*

Size—*in.*		Pressure Rating *psi*	Iron Strength *psi* (*1,000's*)	Dimensions—*in.*				Weight—*lb*	
Run	Branch			T	T_1	H	J	Tee	Cross
36	20	250	DI*	1.15	0.80	20.0	26.0	2,210	2,325
36	24	150	30	1.15	0.89	20.0	26.0	2,255	2,405
36	24	250	35	1.58	1.16	20.0	26.0	2,750	2,880
36	24	250	DI	1.15	0.89	20.0	26.0	2,255	2,405
36	30	150	35	1.58	1.37	28.0	28.0	3,745	4,025
36	30	250	DI	1.15	1.03	28.0	28.0	3,000	3,300
36	36	150	35	1.58	1.58	28.0	28.0	3,930	4,405
36	36	250	DI	1.15	1.15	28.0	28.0	3,160	3,620
42	12	150	30	1.28	0.75	23.0	30.0	3,165	3,240
42	12	250	30	1.78	0.75	23.0	30.0	3,950	4,005
42	12	250	DI	1.28	0.75	23.0	30.0	3,165	3,240
42	14	150	30	1.28	0.66	23.0	30.0	3,170	3,240
42	14	250	30	1.78	0.82	23.0	30.0	3,960	4,020
42	14	250	DI	1.28	0.66	23.0	30.0	3,170	3,240
42	16	150	30	1.28	0.70	23.0	30.0	3,180	3,270
42	16	250	30	1.78	0.89	23.0	30.0	3,970	4,045
42	16	250	DI	1.28	0.70	23.0	30.0	3,180	3,270
42	18	150	30	1.28	0.75	23.0	30.0	3,185	3,275
42	18	250	30	1.78	0.96	23.0	30.0	3,970	4,045
42	18	250	DI	1.28	0.75	23.0	30.0	3,185	3,275
42	20	150	30	1.28	0.80	23.0	30.0	3,205	3,320
42	20	250	30	1.78	1.03	23.0	30.0	3,990	4,080
42	20	250	DI	1.28	0.80	23.0	30.0	3,205	3,320
42	24	150	30	1.78	1.16	23.0	30.0	4,020	4,135
42	24	250	DI	1.28	0.89	23.0	30.0	3,245	3,395
42	30	150	30	1.78	1.37	31.0	31.0	5,225	5,445
42	30	250	DI	1.28	1.03	31.0	31.0	4,125	4,375
42	36	150	DI	1.28	1.15	31.0	31.0	4,265	4,655
42	36	250	DI	1.78	1.58	31.0	31.0	5,360	5,720
42	42	150	DI	1.28	1.28	31.0	31.0	4,470	5,065
42	42	250	DI	1.78	1.78	31.0	31.0	5,580	6,155
48	12	150	30	1.42	0.75	26.0	34.0	4,315	4,390
48	12	250	30	1.96	0.75	26.0	34.0	5,425	5,480
48	12	250	DI	1.42	0.75	26.0	34.0	4,315	4,390
48	14	150	30	1.42	0.66	26.0	34.0	4,315	4,385
48	14	250	30	1.96	0.82	26.0	34.0	5,435	5,495
48	14	250	DI	1.42	0.66	26.0	34.0	4,315	4,385
48	16	150	30	1.42	0.70	26.0	34.0	4,330	4,415
48	16	250	30	1.96	0.89	26.0	34.0	5,445	5,515
48	16	250	DI	1.42	0.70	26.0	34.0	4,330	4,415
48	18	150	30	1.42	0.75	26.0	34.0	4,330	4,420
48	18	250	30	1.96	0.96	26.0	34.0	5,445	5,515
48	18	250	DI	1.42	0.75	26.0	34.0	4,330	4,420
48	20	150	30	1.42	0.80	26.0	34.0	4,350	4,460
48	20	250	30	1.96	1.03	26.0	34.0	5,460	5,545
48	20	250	DI	1.42	0.80	26.0	34.0	4,350	4,460
48	24	150	30	1.42	0.89	26.0	34.0	4,385	4,535
48	24	250	30	1.96	1.16	26.0	34.0	5,485	5,595
48	24	250	DI	1.42	0.89	26.0	34.0	4,385	4,535
48	30	150	30	1.96	1.37	26.0	34.0	5,540	5,705
48	30	250	DI	1.42	1.03	26.0	34.0	4,455	4,670
48	36	150	30	1.96	1.58	34.0	34.0	7,035	7,310
48	36	250	DI	1.42	1.15	34.0	34.0	5,555	5,880
48	42	150	DI	1.42	1.28	34.0	34.0	5,720	6,215
48	42	250	DI	1.96	1.78	34.0	34.0	7,195	7,630
48	48	150	DI	1.42	1.42	34.0	34.0	5,900	6,570
48	48	250	DI	1.96	1.96	34.0	34.0	7,385	8,005

Dimension details of flanges are in Table 10.23. * Ductile iron.

TABLE 10.26—*Flanged Tees and Crosses (contd.)*

Size—*in.*		Pressure Rating *psi*	Iron Strength *psi* (*1,000's*)	Dimensions—*in.*				Weight—*lb*	
Run	Branch			*T*	T_1	*H*	*J*	Tee	Cross
24	6	150	30	0.89	0.55	15.0	19.0	845	875
24	6	250	30	1.16	0.55	15.0	19.0	1,000	1,025
24	6	250	DI*	0.89	0.55	15.0	19.0	845	875
24	8	150	30	0.89	0.60	15.0	19.0	860	895
24	8	250	30	1.16	0.60	15.0	19.0	1,010	1,045
24	8	250	DI	0.89	0.60	15.0	19.0	860	895
24	10	150	30	0.89	0.68	15.0	19.0	880	930
24	10	250	30	1.16	0.68	15.0	19.0	1,020	1,065
24	10	250	DI	0.89	0.68	15.0	19.0	880	930
24	12	150	30	0.89	0.75	15.0	19.0	890	960
24	12	250	30	1.16	0.75	15.0	19.0	1,040	1,100
24	12	250	DI	0.89	0.75	15.0	19.0	890	960
24	14	150	30	0.89	0.66	15.0	19.0	900	975
24	14	250	30	1.16	0.82	15.0	19.0	1,050	1,125
24	14	250	DI	0.89	0.66	15.0	19.0	900	975
24	16	150	30	0.89	0.70	15.0	19.0	915	1,010
24	16	250	35	1.16	0.89	15.0	19.0	1,070	1,160
24	16	250	DI	0.89	0.70	15.0	19.0	915	1,010
24	18	150	30	0.89	0.75	22.0	22.0	1,220	1,365
24	18	250	35	1.16	0.96	22.0	22.0	1,470	1,620
24	18	250	DI	0.89	0.75	22.0	22.0	1,220	1,365
24	20	150	35	1.16	1.03	22.0	22.0	1,510	1,695
24	20	250	DI	0.89	0.80	22.0	22.0	1,255	1,430
24	24	150	35	1.16	1.16	22.0	22.0	1,585	1,850
24	24	250	DI	0.89	0.89	22.0	22.0	1,330	1,570
30	12	150	30	1.03	0.75	18.0	23.0	1,490	1,565
30	12	250	30	1.37	0.75	18.0	23.0	1,780	1,840
30	12	250	DI	1.03	0.75	18.0	23.0	1,490	1,565
30	14	150	30	1.03	0.66	18.0	23.0	1,490	1,570
30	14	250	30	1.37	0.82	18.0	23.0	1,790	1,865
30	14	250	DI	1.03	0.66	18.0	23.0	1,490	1,570
30	16	150	30	1.03	0.70	18.0	23.0	1,505	1,605
30	16	250	30	1.37	0.89	18.0	23.0	1,810	1,900
30	16	250	DI	1.03	0.70	18.0	23.0	1,505	1,605
30	18	150	30	1.03	0.75	18.0	23.0	1,515	1,615
30	18	250	35	1.37	0.96	18.0	23.0	1,815	1,910
30	18	250	DI	1.03	0.75	18.0	23.0	1,515	1,615
30	20	150	30	1.03	0.80	18.0	23.0	1,540	1,670
30	20	250	35	1.37	1.03	18.0	23.0	1,840	1,960
30	20	250	DI	1.03	0.80	18.0	23.0	1,540	1,670
30	24	150	35	1.37	1.16	25.0	25.0	2,475	2,695
30	24	250	DI	1.03	0.89	25.0	25.0	2,025	2,245
30	30	150	35	1.37	1.37	25.0	25.0	2,615	2,980
30	30	250	DI	1.03	1.03	25.0	25.0	2,150	2,500
36	12	150	30	1.15	0.75	20.0	26.0	2,170	2,240
36	12	250	30	1.58	0.75	20.0	26.0	2,670	2,725
36	12	250	DI	1.15	0.75	20.0	26.0	2,170	2,240
36	14	150	30	1.15	0.66	20.0	26.0	2,175	2,240
36	14	250	30	1.58	0.82	20.0	26.0	2,680	2,740
36	14	250	DI	1.15	0.66	20.0	26.0	2,175	2,240
36	16	150	30	1.15	0.70	20.0	26.0	2,185	2,270
36	16	250	30	1.58	0.89	20.0	26.0	2,690	2,765
36	16	250	DI	1.15	0.70	20.0	26.0	2,185	2,270
36	18	150	30	1.15	0.75	20.0	26.0	2,190	2,280
36	18	250	30	1.58	0.96	20.0	26.0	2,695	2,770
36	18	250	DI	1.15	0.75	20.0	26.0	2,190	2,280
36	20	150	30	1.15	0.80	20.0	26.0	2,210	2,325
36	20	250	35	1.58	1.03	20.0	26.0	2,715	2,810

Dimension details of flanges are in Table 10.23. * Ductile iron.

It is significant in C100–55 that all types of fittings up to 12 in. in diameter were designed to Class D specifications, which correspond to a pipe rating of 400 ft of head, or 173 psi.

From 14 in. to 24 in. two classes, B, corresponding to 200 ft of head, or 86 psi, and D were specified. For 30–60-in. pipe sizes all four classes, A, B, C, and D, with respective head ratings increasing in increments of 100 ft, were included.

In all these standards, the wall thickness for pipe of a corresponding size was applied to the fittings. Thus the wall thickness of each branch of standard tees coresponded to the thickness and class of the pipe.

In the AWWA standard of 1908 for cast-iron water pipe and special castings it is interesting to note that tees and crosses were called "standard branches" and designated as "3-way branches" and "4-way branches," respectively. Elbows were designated as "curves" and were of the long-radius type.

AWWA C100–08 was not adopted by ASA, but continued as a standard for AWWA and NEWWA only.

ASA A21.10 (AWWA C110)

Under ASA Sectional Committee A21, an American Standard, A21.10, was developed for the so-called "short-body cast-iron fittings." This was for 3–12 in. sizes only and was designed for 250 psi plus water hammer. The AWWA designation, C110–52, was approved by the four sponsors on the following dates: American Gas Association, Jan. 18, 1952; American Society for Testing and Materials, Feb. 28, 1952; American Water Works Association, May 4, 1951; New England Water Works Association, Jan. 17, 1952. It was approved by ASA on Sep. 30, 1952.

In accord with the practices and policy of Committee A21, the radical change in design for the "short-body fittings" was the subject of extensive investigation and research. The strength of the fittings was tested by bursting tests, and hydraulic losses were determined and compared with those found with current AWWA "long-body" patterns.

The rated pressure for this standard, based on these bursting tests, provided a factor of safety of 2.5 plus water hammer. By setting a practical value for pressure ratings, rather than using a purely theoretical approach related to pipe design, Committee A21 established a significant precedent. Cost studies were also made. American Standard A21.10 has remained unchanged since its initial adoption.

Extension of Included Sizes

It was apparent that the American Standard A21.10–1952 for 3–12-in. fittings of 250-psi working pressure was inadequate in scope, and that the extension of the standard to include larger sizes at higher pressure ratings was essential. AWWA C100–52 was limited to fittings designed for 173 psi, or 400 ft of head.

It was also evident that the design of the larger size of fittings was on a purely empirical basis. Although it is possible to compute the working and bursting pressures of straight pipe with some degree of accuracy, the stress calculations called for in the design of a large cast-iron fitting are so involved and require so many assumptions that, in cooperation with the Cast Iron Pipe Research Association, Committee A21 decided upon a program of bursting tests on various types of fittings in the 14–48-in. size ranges. This program included the

test to destruction of a large number of fittings made of various grades of cast iron with various thicknesses and differences in details of construction.

As a result, the revised American Standard A21.10 is in effect two standards: the earlier one for 12-in. and smaller sizes rated at 250-psi working pressure with 2-in. and 2¼-in. mechanical-joint fittings and 2-in. flange fittings added, and a completely new one for 14–48-in. sizes of 150 and 250 psi. There is no standard for 2-in. and 2¼-in. bell-and-spigot fittings.

Ratings of the 14–48-in. fittings were determined by burst tests on fittings representative of two major groups of fittings with inherently different relative strength. The inherently stronger group includes bends, reducers, and reducing tees and crosses with second and smaller reducing branches. The inherently weaker group consists of full-opening and first-reducing branch tees and crosses. Testing was concentrated on the largest and inherently weakest fitting in each type and size, such as 16-, 24-, 36-, and 48-in. full opening crosses and 24×16-, 36×24-, and 48×36-in. reducing crosses.

In these tests, it was found that wall thickness and iron strength were controlling factors in the bursting strengths of individual fittings of standard design. Therefore, in this revision of A21.10 the wall thickness and iron strength of 14–48-in. fittings are adjusted in combination, as shown necessary by tests, to obtain the required fitting strength. For example, to obtain the same rating, full-opening and first-reducing branch tees and crosses have greater thickness or higher iron strength, or both, than bends, reducers,

TABLE A

Range of Bu sting Pressure and Safety Factor for Some Sizes and Types of Cast-Iron Pipe Fittings

Size *in.*	Type	Standard Requirements			Range of Burst Pressure *psi*	Range of Safety Factor*	Equivalent Pipe Thickness† *in.*
		Pressure Rating *psi*	Iron Strength *psi* (*1,000's*)	Body Thickness *in.*			
24	90-deg bend	150	30	0.89	960–640	6.4–4.3	0.73
24 × 16	Tee	150	30	0.89 × 0.70	540–485	3.6–3.2	0.73 × 0.54
24 × 24	Cross	150	30	1.16	520–415	3.5–2.8	0.73
24 × 24	Tee	150	30	1.16	570–375	3.8–2.5	0.73
36 × 24	Tee	150	30	1.15 × 0.89	680–500	4.5–3.3	0.94 × 0.73
36 × 36	Tee	150	30	1.58	475–380	3.2–2.5	0.94
48 × 36	Tee	150	30	1.42 × 1.15	430–330	2.9–2.2	1.14 × 0.94
48 × 48	Tee	150	30	1.96	370–315	2.5–2.1	1.14
16 × 16	Tee	250	30	0.89	840–630	3.4–2.5	0.63
24 × 24	Tee	250	30	1.31	630–545	2.5–2.2	0.79
24 × 24	Tee	250	40	1.16	650–510	2.6–2.0	0.79
24 × 24	Tee	250	DI‖	0.89	1,020	4.1	0.79
36 × 24	Tee	250	DI	1.15	905	3.6	1.10
48 × 48	Tee	250	DI	1.42	620	2.5	1.33

* Safety factor equals the burst pressure divided by the rated working pressure.
† Thickness of pipe with same pressure rating per A21.6 or A21.8 for 5 ft of cover, Laying Condition B.
‖ Ductile iron with 60,000-psi yield strength.

TABLE 10.26—*Flanged Tees and Crosses (contd.)*

Size—*in.*		Pressure Rating *psi*	Iron Strength *psi* (*1,000's*)	Dimensions—*in.*				Weight—*lb*	
Run	Branch			T	T_1	H	J	Tee	Cross
16	8	250	DI*	0.70	0.60	15.0	15.0	475	520
16	10	150	30	0.70	0.68	15.0	15.0	495	555
16	10	250	30	0.89	0.68	15.0	15.0	565	620
16	10	250	DI	0.70	0.68	15.0	15.0	495	555
16	12	150	30	0.70	0.75	15.0	15.0	520	605
16	12	250	30	0.89	0.75	15.0	15.0	590	665
16	12	250	DI	0.70	0.75	15.0	15.0	520	605
16	14	150	30	0.89	0.82	15.0	15.0	610	700
16	14	250	35	0.89	0.82	15.0	15.0	610	700
16	14	250	DI	0.70	0.66	15.0	15.0	530	620
16	16	150	30	0.89	0.89	15.0	15.0	635	755
16	16	250	35	0.89	0.89	15.0	15.0	635	755
16	16	250	DI	0.70	0.70	15.0	15.0	550	665
18	6	150	30	0.75	0.55	13.0	15.5	480	505
18	6	250	30	0.96	0.55	13.0	15.5	560	585
18	6	250	DI	0.75	0.55	13.0	15.5	480	505
18	8	150	30	0.75	0.60	13.0	15.5	495	535
18	8	250	30	0.96	0.60	13.0	15.5	570	605
18	8	250	DI	0.75	0.60	13.0	15.5	495	535
18	10	150	30	0.75	0.68	13.0	15.5	510	560
18	10	250	30	0.96	0.68	13.0	15.5	585	630
18	10	250	DI	0.75	0.68	13.0	15.5	510	560
18	12	150	30	0.75	0.75	13.0	15.5	535	610
18	12	250	30	0.96	0.75	13.0	15.5	605	670
18	12	250	DI	0.75	0.75	13.0	15.5	535	610
18	14	150	30	0.75	0.66	16.5	16.5	630	720
18	14	250	30	0.96	0.82	16.5	16.5	740	830
18	14	250	DI	0.75	0.66	16.5	16.5	630	720
18	16	150	30	0.96	0.89	16.5	16.5	760	880
18	16	250	35	0.96	0.89	16.5	16.5	760	880
18	16	250	DI	0.75	0.70	16.5	16.5	650	765
18	18	150	30	0.96	0.96	16.5	16.5	785	915
18	18	250	35	0.96	0.96	16.5	16.5	785	915
18	18	250	DI	0.75	0.75	16.5	16.5	665	795
20	6	150	30	0.80	0.55	14.0	17.0	610	635
20	6	250	30	1.03	0.55	14.0	17.0	710	735
20	6	250	DI	0.80	0.55	14.0	17.0	610	635
20	8	150	30	0.80	0.60	14.0	17.0	620	665
20	8	250	30	1.03	0.60	14.0	17.0	720	755
20	8	250	DI	0.80	0.60	14.0	17.0	620	665
20	10	150	30	0.80	0.68	14.0	17.0	635	685
20	10	250	30	1.03	0.68	14.0	17.0	735	780
20	10	250	DI	0.80	0.68	14.0	17.0	635	685
20	12	150	30	0.80	0.75	14.0	17.0	660	735
20	12	250	30	1.03	0.75	14.0	17.0	755	820
20	12	250	DI	0.80	0.75	14.0	17.0	660	735
20	14	150	30	0.80	0.66	14.0	17.0	665	745
20	14	250	35	1.03	0.82	14.0	17.0	770	850
20	14	250	DI	0.80	0.66	14.0	17.0	665	745
20	16	150	30	0.80	0.70	18.0	18.0	810	915
20	16	250	35	1.03	0.89	18.0	18.0	950	1,065
20	16	250	DI	0.80	0.70	18.0	18.0	810	915
20	18	150	35	1.03	0.96	18.0	18.0	965	1,100
20	18	250	DI	0.80	0.75	18.0	18.0	820	945
20	20	150	35	1.03	1.03	18.0	18.0	1,005	1,175
20	20	250	DI	0.80	0.80	18.0	18.0	855	1,015

Dimension details of flanges are in Table 10.23. * Ductile iron.

Fig. 10.26. Flanged Tees and Crosses (See Table 10.26)

TABLE 10.26

Flanged Tees and Crosses

Size—*in.*		Pressure Rating *psi*	Iron Strength *psi* (*1,000's*)	Dimensions—*in.*				Weight—*lb*	
Run	Branch			*T*	T_1	*H*	*J*	Tee	Cross
2	2	250	25	0.35	0.35	4.5	4.5	20	25
3	2	250	25	0.48	0.35	5.5	5.5	35	40
3	3	250	25	0.48	0.48	5.5	5.5	40	50
4	2	250	25	0.52	0.35	6.5	6.5	50	60
4	3	250	25	0.52	0.48	6.5	6.5	60	70
4	4	250	25	0.52	0.52	6.5	6.5	65	80
6	2	250	25	0.55	0.35	8.0	8.0	80	85
6	3	250	25	0.55	0.48	8.0	8.0	85	95
6	4	250	25	0.55	0.52	8.0	8.0	90	110
6	6	250	25	0.55	0.55	8.0	8.0	95	120
8	4	250	25	0.60	0.52	9.0	9.0	140	155
8	6	250	25	0.60	0.55	9.0	9.0	145	165
8	8	250	25	0.60	0.60	9.0	9.0	155	195
10	4	250	25	0.68	0.52	11.0	11.0	205	220
10	6	250	25	0.68	0.55	11.0	11.0	215	240
10	8	250	25	0.68	0.60	11.0	11.0	225	265
10	10	250	25	0.80	0.80	11.0	11.0	270	330
12	4	250	25	0.75	0.52	12.0	12.0	290	310
12	6	250	25	0.75	0.55	12.0	12.0	295	320
12	8	250	25	0.75	0.60	12.0	12.0	310	345
12	10	250	25	0.87	0.80	12.0	12.0	360	415
12	12	250	25	0.87	0.87	12.0	12.0	385	460
14	6	150	25	0.66	0.55	14.0	14.0	375	400
14	6	250	25	0.82	0.55	14.0	14.0	420	450
14	6	250	DI*	0.66	0.55	14.0	14.0	375	400
14	8	150	25	0.66	0.60	14.0	14.0	390	425
14	8	250	25	0.82	0.60	14.0	14.0	435	475
14	8	250	DI	0.66	0.60	14.0	14.0	390	425
14	10	150	25	0.66	0.68	14.0	14.0	400	460
14	10	250	25	0.82	0.68	14.0	14.0	450	505
14	10	250	DI	0.66	0.68	14.0	14.0	400	460
14	12	150	25	0.82	0.75	14.0	14.0	470	555
14	12	250	30	0.82	0.75	14.0	14.0	470	555
14	12	250	DI	0.66	0.75	14.0	14.0	425	505
14	14	150	25	0.82	0.82	14.0	14.0	500	595
14	14	250	30	0.82	0.82	14.0	14.0	500	595
14	14	250	DI	0.66	0.66	14.0	14.0	435	530
16	6	150	30	0.70	0.55	15.0	15.0	465	490
16	6	250	30	0.89	0.55	15.0	15.0	540	565
16	6	250	DI	0.70	0.55	15.0	15.0	465	490
16	8	150	30	0.70	0.60	15.0	15.0	475	520
16	8	250	30	0.89	0.60	15.0	15.0	555	590

Dimension details of flanges are in Table 10.23. * Ductile iron.

TABLE B

Changes in Wall Thicknesses and Iron Strengths of Fittings to Increase the Safety Factor From 2 to 3

Size *in.*	Type of Fittings	Pressure Rating—*psi*	
		150	250
12 & smaller	All fittings	not involved in changes	not involved in changes
14	Fittings other than full-opening and first-reduction tees and crosses	no change: iron strength remained 25,000 psi; thickness remained 0.66 in.	no change: iron strength remained either 25,000 psi or ductile, with thicknesses remaining 0.82 in. and 0.66 in., respectively
14	Full-opening and first-reduction tees and crosses	no change: iron strength remained 25,000 psi; thickness remained 0.82 in.	no change: iron strength remained either 30,000 psi or ductile, with thicknesses remaining 0.82 in. and 0.66 in., respectively
16	Fittings other than full-opening and first-reduction tees and crosses	increased iron strength from 25,000 psi to 30,000 psi; thickness remained 0.70 in.	increased iron strength from 25,000 psi to 30,000 psi; thickness remained 0.89 in.; no change from ductile with thickness of 0.70 in.
16	Full-opening and first-reduction tees and crosses	increased iron strength from 25,000 psi to 30,000 psi; thickness remained 0.89 in.	increased iron strength from 30,000 psi to 35,000 psi, with thickness remaining 0.89 in.; no change from ductile with thickness of 0.70 in.
18	Fittings other than full-opening and first-reduction tees and crosses	no change: iron strength remained 30,000 psi; thickness remained 0.75 in.	no change: iron strengths remained either 30,000 psi or ductile, with thicknesses remaining 0.96 in. and 0.75 in., respectively
18	Full-opening and first-reduction tees and crosses	no change: iron strength remained 30,000 psi; thickness remained 0.96 in.	eliminated iron strength of 30,000 psi and 40,000 psi; added iron strength of 35,000 psi; thickness remained 0.96 in.; no change from ductile with thickness of 0.75 in.
20	Fittings other than full-opening, first-, second- and third-reduction tees and crosses	no change: iron strength remained 30,000 psi; thickness remained 0.80 in.	no change: iron strength remained either 30,000 psi or ductile, with thicknesses remaining 1.03 in. and 0.80 in., respectively
20	Second- and third-reduction tees and crosses	no change: iron strength remained 30,000 psi; thickness remained 0.80 in.	increased iron strength from 30,000 psi to 35,000 psi; thickness remained 1.03 in.; no change from ductile with thickness of 0.80 in.
20	Full-opening and first-reduction tees and crosses	increased iron strength from 30,000 psi to 35,000 psi; thickness remained 1.03 in.	eliminated iron strength of 30,000 and 40,000 psi and changed to ductile only; thickness remained 0.80 in.
24	Fittings other than full-opening, first-, second- and third-reduction tees and crosses	no change: iron strength remained 30,000 psi; thickness remained 0.89 in.	no change: iron strength remained either 30,000 psi or ductile, with thicknesses remaining 1.16 in. and 0.89 in., respectively
24	Second- and third-reduction tees and crosses	no change: iron strength remained 30,000 psi; thickness remained 0.89 in.	increased iron strength from 30,000 psi to 35,000 psi; thickness remained 1.16 in.; no change from ductile with thickness of 0.89 in.
24	Full-opening and first-reduction tees and crosses	increased iron strength from 30,000 psi to 35,000 psi; thickness remained 1.16 in.	eliminated iron strength of 30,000 and 40,000 psi and changed to ductile only; thickness remained 0.89 in.
30	Fittings other than full-opening, first-, second- and third-reduction tees and crosses	no change: iron strength remained 30,000 psi; thickness remained 1.03 in.	no change: iron strength remained either 30,000 psi or ductile, with thicknesses remaining 1.37 in. and 1.03 in., respectively
30	Second- and third-reduction tees and crosses	no change: iron strength remained 30,000 psi; thickness remained 1.03 in.	increased iron strength from 30,000 psi to 35,000 psi; thickness remained 1.37 in.; no change from ductile with thickness of 1.03 in.
30	Full-opening and first-reduction tees and crosses	increased iron strength from 30,000 psi to 35,000 psi; thickness remained 1.37 in.	no change: remained ductile only with thickness of 1.03 in.

TABLE B—*Changes to Increase Safety Factor From 2 to 3 (contd.)*

Size *in.*	Type of Fittings	Pressure Rating—*psi* 150	Pressure Rating—*psi* 250
36	Fitting other than full-opening, first-, second- and third-reduction tees and crosses	no change: iron strength remained 30,000 psi; thickness remained 1.15 in.	no change: iron strength remained either 30,000 psi or ductile, with thicknesses remaining 1.58 in. and 1.15 in., respectively
36	Second- and third-reduction tees and crosses	no change: iron strength remained 30,000 psi; thickness remained 1.15 in.	increased iron strength from 30,000 psi to 35,000 psi; thickness remained 1.58 in.; no change from ductile with thickness of 1.15 in.
36	Full-opening and first-reduction tees and crosses	increased iron strength from 30,000 psi to 35,000 psi; thickness remained 1.58 in.	no change: remained ductile only with thickness of 1.15 in.
42	Fittings other than full-opening, first-, second- and third-reduction tees and crosses	no change: iron strength remained 30,000 psi; thickness remained 1.28 in.	no change: iron strength remained either 30,000 psi or ductile, with thicknesses remaining 1.78 in. and 1.28 in., respectively
42	Second- and third-reduction tees and crosses	increased thickness from 1.28 in. to 1.78 in.; iron strength remained 30,000 psi	change to ductile only; thickness remained 1.28 in.
42	Full-opening and first-reduction tees and crosses	eliminated iron strength of 30 000 psi and changed to ductile only; thickness remained 1.28 in.	increased thickness from 1.28 in. to 1.78 in.; remained ductile only
48	Fittings other than full-opening, first-, second- and third-reduction tees and crosses	no change: iron strength remained 30,000 psi; thickness remained 1.42 in.	no change: iron strength remained either 30,000 psi or ductile, with thicknesses remaining 1.96 in. and 1.42 in., respectively
48	Second- and third-reduction tees and crosses	increased thickness from 1.42 in. to 1.96 in.; iron strength remained 30,000 psi	eliminated iron strength of 30 000 psi and changed to ductile only; thickness remained 1.42 in.
48	Full-opening and first-reduction tees and crosses	eliminated iron strength of 30 000 psi and changed to ductile only; thickness remained 1.42 in.	increased thickness from 1.42 in. to 1.96 in.; remained ductile only

and reducing tees and crosses with second and smaller reducing branches.

In 1962, a proposed "American Standard for Cast-Iron Fittings, 2-in. Through 48-in. for Water and Other Liquids" (revision of A21.10–1952) was unanimously approved by Subcommittee 3 and submitted to ASA Sectional Committee A21 for consideration. This proposed American Standard provided for a minimum safety factor of two times the rated working pressure. The safety factor was based on fitting burst strengths developed in tests. Most of the tests were made on weaker fitting types; however, the majority of fitting types are stronger than those tested, and, therefore, have substantially higher safety factors than the minimum.

Table A shows the range of bursting pressure and safety factor for some of the sizes and types of fittings tested in order to establish the ratings in the proposed American Standard submitted to Sectional Committee A21 in 1962.

The minimum grade of cast iron, 25,000-psi iron strength, was retained in the proposed American Standard with higher grades up to 40,000-psi iron strength being used to secure

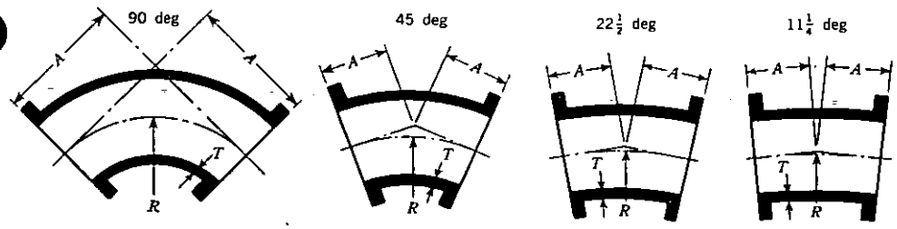

Fig. 10.25. Flanged Bends (See Table 10.25)

TABLE 10.25

Flanged Bends

Size *in.*	PR† *psi*	IS‡ *psi* (1,000's)	*T*	90 deg *A*	90 deg *R*	45 deg *A*	45 deg *R*	22½ deg *A*	22½ deg *R*	11¼ deg *A*	11¼ deg *R*	90 deg	45 deg	22½ deg	11¼ deg
			Dimensions—*in.*									Weight—*lb*			
2	250	25	0.35	4.5	3.0	2.5	2.44	2.5	5.03	2.5	10.15	14	12	11	11
3	250	25	0.48	5.5	4.0	3.0	3.62	3.0	7.56	3.0	15.25	25	20	20	20
4	250	25	0.52	6.5	4.5	4.0	4.81	4.0	10.06	4.0	20.31	45	40	40	40
6	250	25	0.55	8.0	6.0	5.0	7.25	5.0	15.06	5.0	30.50	65	55	55	55
8	250	25	0.60	9.0	7.0	5.5	8.44	5.5	17.62	5.5	35.50	105	90	90	90
10	250	25	0.68	11.0	9.0	6.5	10.88	6.5	22.62	6.5	45.69	165	130	135	135
12	250	25	0.75	12.0	10.0	7.5	13.25	7.5	27.62	7.5	55.81	235	195	205	205
14	150	25	0.66	14.0	11.5	7.5	12.06	7.5	25.12	7.5	50.75	290	220	225	225
14	250	25	0.82	14.0	11.5	7.5	12.06	7.5	25.12	7.5	50.75	330	245	250	255
14	250	DI*	0.66	14.0	11.5	7.5	12.06	7.5	25.12	7.5	50.75	290	220	225	225
16	150	30	0.70	15.0	12.5	8.0	13.25	8.0	27.62	8.0	55.81	370	280	285	285
16	250	30	0.89	15.0	12.5	8.0	13.25	8.0	27.62	8.0	55.81	430	315	325	325
16	250	DI	0.70	15.0	12.5	8.0	13.25	8.0	27.62	8.0	55.81	370	280	285	285
18	150	30	0.75	16.5	14.0	8.5	14.50	8.5	30.19	8.5	60.94	450	325	335	335
18	250	30	0.96	16.5	14.0	8.5	14.50	8.5	30.19	8.5	60.94	530	375	385	385
18	250	DI	0.75	16.5	14.0	8.5	14.50	8.5	30.19	8.5	60.94	450	325	335	335
20	150	30	0.80	18.0	15.5	9.5	16.88	9.5	35.19	9.5	71.06	580	430	435	435
20	250	30	1.03	18.0	15.5	9.5	16.88	9.5	35.19	9.5	71.06	685	485	505	505
20	250	DI	0.80	18.0	15.5	9.5	16.88	9.5	35.19	9.5	71.06	580	430	435	435
24	150	30	0.89	22.0	18.5	11.0	18.12	11.0	37.69	11.0	76.12	900	630	640	645
24	250	30	1.16	22.0	18.5	11.0	18.12	11.0	37.69	11.0	76.12	1,085	730	755	760
24	250	DI	0.89	22.0	18.5	11.0	18.12	11.0	37.69	11.0	76.12	900	630	640	645
30	150	30	1.03	25.0	21.5	15.0	27.75	15.0	57.81	15.0	116.75	1,430	1,120	1,135	1,150
30	250	30	1.37	25.0	21.5	15.0	27.75	15.0	57.81	15.0	116.75	1,755	1,335	1,385	1,395
30	250	DI	1.03	25.0	21.5	15.0	27.75	15.0	57.81	15.0	116.75	1,430	1,120	1,135	1,150
36	150	30	1.15	28.0	24.5	18.0	35.00	18.0	72.88	18.0	147.25	2,135	1,755	1,790	1,805
36	250	30	1.58	28.0	24.5	18.0	35.00	18.0	72.88	18.0	147.25	2,690	2,155	2,235	2,250
36	250	DI	1.15	28.0	24.5	18.0	35.00	18.0	72.88	18.0	147.25	2,135	1,755	1,790	1,805
42	150	30	1.28	31.0	27.5	21.0	42.25	21.0	88.00	21.0	177.69	3,055	2,600	2,665	2,680
42	250	30	1.78	31.0	27.5	21.0	42.25	21.0	88.00	21.0	177.69	3,880	3,240	3,365	3,390
42	250	DI	1.28	31.0	27.5	21.0	42.25	21.0	88.00	21.0	177.69	3,055	2,600	2,665	2,680
48	150	30	1.42	34.0	30.5	24.0	49.50	24.0	103.06	24.0	208.12	4,095	3,580	3,665	3,695
48	250	30	1.96	34.0	30.5	24.0	49.50	24.0	103.06	24.0	208.12	5,210	4,485	4,660	4,690
48	250	DI	1.42	34.0	30.5	24.0	49.50	24.0	103.06	24.0	208.12	4,095	3,580	3,665	3,695

Dimension details of flanges are shown in Table 10.23.
† Pressure rating.
‡ Iron strength.
* Ductile iron

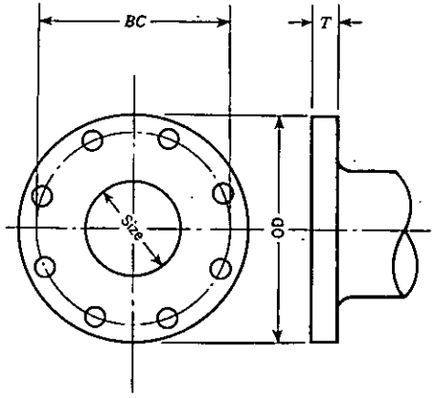

Fig. 10.23. Flange Details (See Table 10.23)

TABLE 10.23

Flange Details

Size *in.*	Dimensions—*in.*					No. of Bolts
	OD	*BC*	*T*	Bolt Hole Dia.	Bolt Diam. & Length	
2	6.00	4.75	0.62 ±.12	¾	¾ × 2¼	4
3	7.50	6.00	0.75 ±.12	¾	¾ × 2½	4
4	9.00	7.50	0.94 ±.12	¾	¾ × 3	8
6	11.00	9.50	1.00 ±.12	¾	¾ × 3¼	8
8	13.50	11.75	1.12 ±.12	¾	¾ × 3½	8
10	16.00	14.25	1.19 ±.12	1	¾ × 3¾	12
12	19.00	17.00	1.25 ±.12	1	¾ × 3¾	12
14	21.00	18.75	1.38 ±.19	1⅛	1 × 4¼	12
16	23.50	21.25	1.44 ±.19	1⅛	1 × 4½	16
18	25.00	22.75	1.56 ±.19	1¼	1⅛ × 4¾	16
20	27.50	25.00	1.69 ±.19	1¼	1⅛ × 5	20
24	32.00	29.50	1.88 ±.19	1⅜	1¼ × 5½	20
30	38.75	36.00	2.12 ±.25	1⅜	1¼ × 6¼	28
36	46.00	42.75	2.38 ±.25	1½	1½ × 7	32
42	53.00	49.50	2.62 ±.25	1½	1½ × 7½	36
48	59.50	56.00	2.75 ±.25	1½	1½ × 7¾	44

FACING: Flanges are plain faced without projection or raised face and are finished smooth or with shallow serrations.

BACK FACING: Flanges may be back faced or spot faced for compliance with the flange thickness tolerances.

LAYING LENGTH DIMENSIONS: Face-to-face dimensions shall conform to a tolerance of ±0.06 in. for sizes 2–10 in. and ±0.12 in. for sizes 12–48 in. Center-to-face tolerances shall be one half those of face-to-face tolerances. The largest opening shall govern the tolerance for all openings.

FLANGES: The flanges shown above are adequate for water of 250-psi working pressure and should not be confused with flanges covered by ASA B16.2, which are rated for steam of 250 psi working pressure. The bolt circle and the bolt holes shown match those of the ASA standard for flanges, B16.1. If flanges are required to be made in accordance with ASA B16.2 or some other standard, this shall be specified on the purchase order.

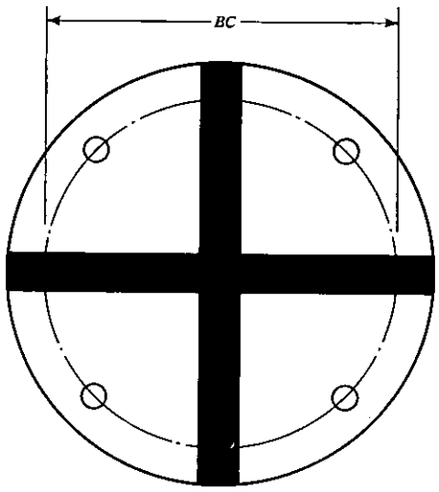

Fig. 10.24. Base Drilling Details (See Table 10.24)

TABLE 10.24

Base Drilling Detail

Nom. Diam. *in.*	Dimensions—*in.*			Approx. Wgt. of Base—*lb*	
	BC	Bolt Hole Diam.	No. of Bolts	Bends	Tees
2	3.50	⅝	4	5	5
3	3.88	⅝	4	10	5
4	4.75	¾	4	10	10
6	5.50	¾	4	20	15
8	7.50	¾	4	40	30
10	7.50	¾	4	45	30
12	9.50	⅞	4	65	45
14	9.50	⅞	4	70	50
16	9.50	⅞	4	75	50
18	11.75	⅞	4	115	75
20	11.75	⅞	4	120	75
24	11.75	⅞	4	130	80
30	14.25	1	4	190	120
36	17.00	1	4	250	160
42	21.25	1⅛	4	410	270
48	22.75	1¼	4	515	335

Bases are not faced or drilled unless so specified in the purchase order; the dimensions not shown are contained in Table 10.27.

higher pressure ratings without radically changing the thickness of the castings. A further development was the use of ductile iron with a 60,000-psi yield strength, which permitted thinner walls in the castings.

Sectional Committee A21 received copies of the proposed American Standard and comments from the AWWA Standardization Committee and from individual members of Sectional Committee A21 prior to the June 1962 meeting. These comments were discussed at the June meeting, and some of the sectional committee members objected to the use of a minimum safety factor of 2.0 based on bursting tests on representative fittings of the weakest type. The objections were based on the omission of the standard water hammer allowance and the use of 2.0 as a safety factor instead of 2.5, as used in the design of cast-iron pipe. Although Subcommittee 3 had presented considerable evidence to show that fittings of similar design had favorable long-term records, Sectional Committee A21 decided to return the proposed American Standard to Subcommittee 3 to determine whether revisions could be made to increase the minimum safety factor.

TABLE C

Design Details That Must Be Listed and Those Whose Listing Is Optional on Purchase Order

Design Detail	Section in Standard
Size, joint type, thickness or pressure rating	tables
Special joints	10–3.1
Type of iron	10–3.2
Certification by manufacturer	10–4
Inspection by purchaser	10–5
Cement lining	10–8.2
Special coatings and linings	10–8.4
Special tests	10–12

It was agreed that Subcommittee 3 would review all of the comments discussed at the June 1962 meeting and would submit a second draft of the proposed American Standard to Sectional Committee A21. This second draft of the proposed American Standard was generally the same as the first draft except that the minimum safety factor was increased to three times the rated working pressure. Table B summarizes the changes from the first draft, which consist primarily of provisions for increases in iron strengths and thicknesses, where necessary, and for the addition of more ductile-iron fittings.

The second draft of the proposed American Standard was approved by Sectional Committee A21 in December 1963 as A21.10, "American Standard for Cast Iron Fittings, 2 in. Through 48 in., for Water and Other Liquids."

Complete tables of dimensions for mechanical-joints fittings, bell-and-spigot fittings, and flanged fittings are included in this standard.

Information Required From the Purchaser

This standard includes certain options which, if desired, *must* be specified on the purchase order. The options are listed in Table C.

The standard acceptance tests (Sec. 10–10) for fittings relate to the material tests and dimensional tests only. It is not the practice of producers to conduct hydrostatic tests on fittings, particularly those of large diameters. If the purchaser desires hydrostatic tests, this requirement must be stated in advance (Sec. 10–12) in the invitation for bids and on the purchase order.

Also, see the section, "Special Service Requirements," below.

Water Hammer

As noted above, the pressure ratings of the fittings are based on providing a minimum safety factor of 3. The so-called "standard allowances for water hammer" have not been applied to this safety factor. If the normal operating pressure plus the estimated water hammer exceeds the normal pressure rating of the 150-psi fitting, the higher pressure rating should be used—that is, 250 psi. If this pressure is not sufficient, it may be necessary to have special fittings designed or to provide remedial devices to limit the water hammer pressures so that the total internal pressure will not exceed the specified rating.

Special-Service Requirements

The following special-service requirements should be noted:

1. The fittings for which this standard is intended are those normally used in water and sanitary service systems. Fittings for other services may require special consideration by the purchaser.

2. Although this standard does not specifically orient the bolt holes in the flanges of the mechanical joint, it is at times convenient or necessary to have the bolt holes oriented. The usual but not universal practice is to have the bolt holes straddle the vertical centerline of the fittings, valves, and hydrants. (The vertical centerline of a fitting is determined when the fitting is in the position to change the direction of fluid flow in a horizontal direction; with standard base bends and standard base tees the vertical centerline is determined when the fitting is in a position to change the fluid flow in a vertical direction.) If orientation is known to be necessary, it should be stated on the purchase order.

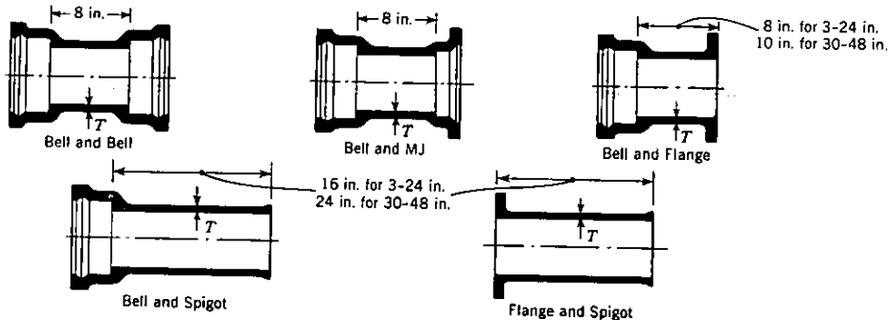

Fig. 10.22. Bell-and-Spigot Connecting Pieces (See Table 10.22)

TABLE 10.22

Connecting Pieces

Size *in.*	Pressure Rating *psi*	Iron Strength *psi* (*1,000's*)	*T* *in.*	Weight—*lb*				
				Bell & Bell	Bell & Spigot	Bell & MJ	Bell & Flange	Flange & Spigot
3	250	25	0.48	50	40	40	35	30
4	250	25	0.52	65	55	55	50	40
6	250	25	0.55	95	80	80	70	60
8	250	25	0.60	130	115	115	105	85
10	250	25	0.68	170	155	150	140	120
12	250	25	0.75	215	195	190	180	165
14	150	25	0.66	240	215	230	205	180
14	250	25	0.82	270	240	255	230	195
14	250	DI*	0.66	240	215	230	205	180
16	150	30	0.70	305	270	290	255	220
16	250	30	0.89	345	300	320	290	240
16	250	DI	0.70	305	270	290	255	220
18	150	30	0.75	360	320	340	295	255
18	250	30	0.96	420	385	385	335	305
18	250	DI	0.75	360	320	340	295	255
20	150	30	0.80	420	375	405	355	310
20	250	30	1.03	510	435	465	410	340
20	250	DI	0.80	420	375	405	355	310
24	150	30	0.89	545	490	530	465	415
24	250	30	1.16	675	580	620	555	460
24	250	DI	0.89	545	490	530	465	415
30	150	30	1.03	805	925	820	740	815
30	250	30	1.37	1,090	1,165	1,005	935	945
30	250	DI	1.03	805	925	820	740	815
36	150	30	1.15	1,170	1,290	1,170	1,070	1,115
36	250	30	1.58	1,525	1,615	1,410	1,320	1,315
36	250	DI	1.15	1,170	1,290	1,170	1,070	1,115
42	150	30	1.28	1,535	1,675	1,515	1,430	1,480
42	250	30	1,78	2,070	2,145	1,870	1,800	1,755
42	250	DI	1.28	1,535	1,675	1,515	1,430	1,480
48	150	30	1.42	1,950	2,125	1,930	1,790	1,855
48	250	30	1.96	2,670	2,740	2,395	2,280	2,190
48	250	DI	1.42	1,950	2,125	1,930	1,790	1,855

Dimension details for mechanical-joint bells are given in Table 10.1; calking bells, Table 10.12; spigots, Table 10.13; flanges, Table 10.23. Bell and spigot, flange and spigot, and bell and flange connecting pieces may be furnished from centrifugally cast pipe with plain ends, if applicable.

* Ductile iron.

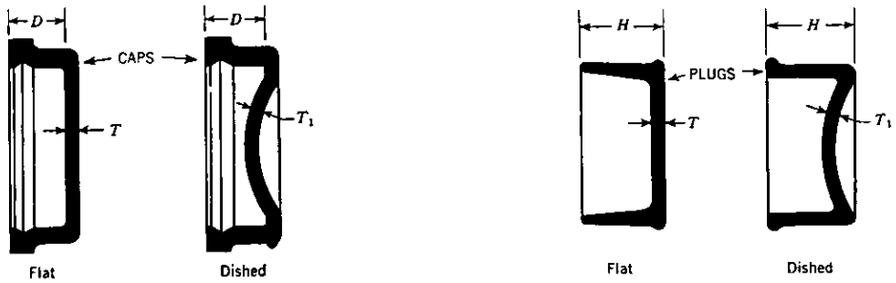

Fig. 10.21. Bell-and-Spigot Caps and Plugs (See Table 10.21)

TABLE 10.21

Bell-and-Spigot Caps and Plugs

Size *in.*	Pressure Rating *psi*	Iron Strength *psi* (1,000's)	Caps					Plugs				
			Dimension *in.*			Wgt. *lb*		Dimensions *in.*			Wgt. *lb*	
			T	T_1	*D*	Flat	Dished	*T*	T_1	*H*	Flat	Dished
3	250	25	0.50		3.50	20		0.50		5.50	6	
4	250	25	0.60		4.00	25		0.60		5.50	10	
6	250	25	0.65		4.00	40		0.65		5.50	15	
8	250	25	0.70		4.00	55		0.70		5.50	25	
10	250	25	0.75		4.00	75		0.75		6.00	40	
12	250	25	0.75		4.00	100		0.75		6.00	50	
14	250	30	1.00	0.82	4.00	140	135	1.00	0.82	6.00	75	75
14	250	DI*	0.82	0.66	4.00	125	115	0.82	0.66	6.00	65	65
16	250	30	1.11	0.89	4.00	185	175	1.11	0.89	6.50	105	115
16	250	DI	0.89	0.70	4.00	165	150	0.89	0.70	6.50	90	90
18	250	30	1.25	0.96	4.00	240	220	1.25	0.96	6.50	140	135
18	250	DI	0.96	0.75	4.00	200	180	0.96	0.75	6.50	115	110
20	250	30	1.40	1.03	4.00	310	280	1.40	1.03	6.50	180	175
20	250	DI	1.03	0.80	4.00	245	220	1.03	0.80	6.50	145	140
24	250	30	1.50	1.16	4.00	440	400	1.50	1.16	8.00	375	415
24	250	DI	1.16	0.89	4.00	345	310	1.16	0.89	8.00	290	315
30	150	30		1.37	4.50		715		1.37	8.00		595
30	250	DI		1.03	4.50		515		1.03	8.00		440
36	150	30		1.58	4.50		1,100		1.58	8.00		900
36	250	DI		1.15	4.50		790		1.15	8.00		670
42	150	30		1.78	5.00		1,610		1,78	9.00		1,375
42	250	DI		1.28	5.00		1,110		1,28	9.00		965
48	150	30		1.96	5.00		2,215		1.96	9.00		1,875
48	250	DI		1.42	5.00		1,520		1.42	9.00		1,310

* Ductile iron.

UDC 621.774.1

ASA A21.10-1964
(AWWA C110-64)
Revision of A21.10-1952
(AWWA C110-52)

American Standard for

Cast-Iron Fittings, 2 in. Through 48 in., for Water and Other Liquids

Sec. 10-1—Scope

This standard covers 2-48-in. cast-iron fittings to be used with cast-iron pipe for water and other liquids at rated working pressures of 150 and 250 psi. Specifications for such fittings with mechanical joints, bell-and-spigot joints, and flange joints are given in the tables. This standard may also be used for fittings with such other joints as may be agreed upon at the time of purchase.

Sec. 10-2—Definitions

Under this standard the following definitions shall apply:

10-2.1. *Purchaser.* The party entering into a contract or agreement to purchase fittings according to this standard.

10-2.2. *Manufacturer.* The party that produces the fittings.

10-2.3. *Inspector.* The representative of the purchaser, authorized to inspect in behalf of the purchaser to determine whether or not the fittings meet this standard.

10-2.4. *Heat.* The period during which fittings are cast and the melting unit is operated continuously.

10-2.5. *Mechanical joint.* A bolted joint of the stuffing box type as detailed in Table 10.1 and as described in ASA A21.11-1964 (AWWA C111-64).

10-2.6. *Bell-and-spigot joint.* The poured or calked joint as detailed in Table 10.12.

10-2.7. *Flange joint.* The flanged and bolted joint as detailed in Table 10.23.

Sec. 10-3—General Requirements

10-3.1. Fittings with mechanical joints, bell-and-spigot joints, and flange joints shall conform to the dimensions and weights shown in the tables in this standard, unless otherwise agreed upon at the time of purchase. The mechanical joint shall also conform in all respects to ASA A21.11-1964 (AWWA C111-64). Fittings with other types of joints shall comply with the joint dimensions and weights agreed upon, but in all other respects shall fulfill the requirements hereinafter given.

10-3.2. Fittings shall be cast from gray iron or ductile iron, as shown in the tables. When both are shown in the tables, either may be used at the manufacturer's option unless otherwise specified on the purchase order.

10-3.3. Standard fittings shall be furnished with end combinations shown in the tables. When fittings of other design and dimensions are purchased under this standard, it is the obligation of the purchaser to supply with each order specific details for each size, pressure rating, or kind of fitting.

[NOTE: Fittings without spigot ends or plain ends are preferred.]

Sec. 10-4—Inspection and Certification by Manufacturer

10-4.1. The manufacturer shall establish the necessary quality control,

cleaning, and inspection practice to insure compliance with this standard.

10–4.2. The manufacturer shall, if required on the purchase order, furnish a sworn statement that the inspection and all the specified tests have been made and the results thereof comply with the requirements of this standard.

Sec. 10–5—Inspection by Purchaser

10–5.1. If the purchaser desires to inspect fittings at the manufacturer's plant, the purchaser shall so specify on the purchase order, stating the conditions (such as time and the extent of the inspection) under which the inspection shall be made.

10–5.2. The inspector shall have free access to those parts of the manufacturer's plant which are necessary to insure compliance with this standard. The manufacturer shall make available for the inspector's use such gages as are necessary for inspection. The manufacturer shall provide the inspector with such handling assistance as necessary.

Sec. 10–6—Delivery and Acceptance

All fittings and accessories shall comply with this standard. Fittings or accessories not complying with this standard shall be replaced by the manufacturer at the agreed point of delivery. The manufacturer shall not be liable for shortages or damaged fittings or accessories after acceptance at the agreed point of delivery except as recorded on the delivery receipt or similar document by the carrier's agent.

Sec. 10–7—Tolerances or Permitted Variations

10–7.1. *Dimensions.* The fittings shall be gaged at sufficiently frequent intervals to determine whether the dimensions are in accordance with the tables shown in this standard. The inside diameter of the sockets and outside diameters of the spigot ends shall be tested with circular gages.

10–7.2. *Thickness.* Minus tolerances for T, body thickness of the run, and T_1, body thickness of the branch in a tee or cross fitting, shall not be more than those shown below:

Pipe Size *in.*	Minus Tolerance *in.*
<3	0.07
3–6	0.10
8–20	0.12
24–48	0.15

An additional tolerance shall be permitted over areas not exceeding 8 in. in any direction, as follows: for 3–12-in. fittings, 0.02 in.; for 14–48-in. fittings, 0.03 in.

10–7.3. *Weight.* The weight of any fitting shall not be less than the nominal tabulated weight by more than 10 per cent for fittings 12 in. or smaller in diameter, or by more than 8 per cent for fittings larger than 12 in. in diameter. Each fitting shall be weighed before the application of any lining or coating other than the standard coating, and the weight shall be shown on the outside.

Sec. 10–8—Coatings and Linings

10–8.1. *Standard outside coating.* The standard outside coating for general use under all normal conditions shall be a bituminous coating of either coal tar or asphalt base approximately 1 mil thick. The standard coating shall be applied to the outside of all fittings, unless otherwise specified. The finished coating shall be continuous, smooth, neither brittle when cold nor sticky when exposed to the sun, and shall be strongly adherent to the fitting.

10–8.2. *Cement-mortar linings.* Cement linings shall be in accordance with ASA A21.4—1964 (AWWA

TABLE 10.19

Bell-and-Spigot Tapped Tees

Size *in.*	Pressure Rating *psi*	T *in.*	L *in.*	Max. Tap in Boss *in.*	Wgt. *lb*
3	250	0.48	8	2½	55
4	250	0.52	8	2½	65
6	250	0.55	8	2½	95
8	250	0.60	8	2½	130
10	250	0.68	8	2½	170
12	250	0.75	8	2½	215

Two bosses can be used to make a tapped cross. Dimension details of bells are given in Table 10.12.

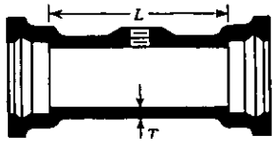

Fig. 10.19. Bell-and-Spigot Tapped Tees (See Table 10.19)

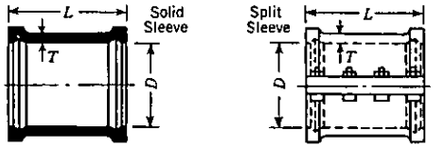

Fig. 10.20. Bell-and-Spigot Sleeves at 250-psi Pressure Rating (See Table 10.20)

TABLE 10.20

Bell-and-Spigot Sleeves at 250 psi Pressure Rating

S* in.	1S† psi (1,000's)	D in.	T in.	L in.		Sleeve Wgt.—*lb*			
						Solid		Split #	
				S§	L‖	S§	L‖	S§	L‖
3	25	4.76	0.65	10	15	35	50	55	80
4	25	5.80	0.65	10	15	45	65	65	100
6	25	7.90	0.70	10	15	65	90	90	130
8	25	10.10	0.75	12	15	100	120	135	165
10	25	12.20	0.80	12	18	130	180	165	245
12	25	14.30	0.85	14	18	185	225	230	295
14	25	16.20	0.85	15	18	215	255	275	310
16	30	18.50	0.90	15	24	270	400	330	510
18	30	20.60	0.95	15	24	320	470	380	585
20	30	22.70	1.03	15	24	380	555		
24	30	26.90	1.16	15	24	510	750		
30	30	33.10	1.37	15	24	725	1,075		
36	30	39.40	1.58	15	24	1,015	1,490		
42	30	45.60	1.78	15	24	1,310	1,870		
48	30	51.90	1.96	15	24	1,645	2,415		

* Size.
† Iron strength.
§ Short.
‖ Long.
\# Split sleeves are furnished in Class 150 only and can be furnished with boss and tap for service connection, manufacturers should be consulted for details.

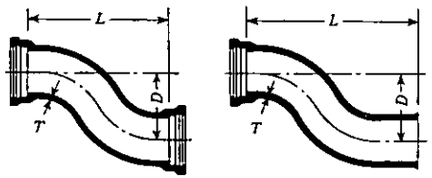

B and B B and S

Fig. 10.18. Bell-and-Spigot Offsets (See Table 10.18)

TABLE 10.18

Bell-and-Spigot Offsets

Size in.	BD†	PR‡ psi	IS§ psi (1,000's)	D in.	T in.	B&B L in.	B&B Wgt. lb	B&S L in.	B&S Wgt. lb
3		250	25	6	0.48	19	70	27	60
3		250	25	12	0.48	22	80	30	70
3		250	25	18	0.48	30	90	38	80
4		250	25	6	0.52	19	90	27	80
4		250	25	12	0.52	22	100	30	90
4		250	25	18	0.52	30	120	38	110
6		250	25	6	0.55	20	135	28	120
6		250	25	12	0.55	26	160	34	145
6		250	25	18	0.55	33	190	41	175
8		250	25	6	0.60	21	195	29	180
8		250	25	12	0.60	28	235	36	220
8		250	25	18	0.60	35	275	43	260
10		250	25	6	0.68	22	265	30	245
10		250	25	12	0.68	30	325	38	305
10		250	25	18	0.68	38	385	46	365
12		250	25	6	0.75	26	370	34	350
12		250	25	12	0.75	37	470	45	450
12		250	25	18	0.75	48	570	56	550
14	I	150	25	6	0.66	27	400	35	375
14	II	250	25	6	0.82	27	465	35	435
14	I	250	DI*	6	0.66	27	400	35	375
14	I	150	25	12	0.66	38	500	46	475
14	II	250	25	12	0.82	38	590	46	560
14	I	250	DI	12	0.66	38	500	46	475
14	I	150	25	18	0.66	49	605	57	580
14	II	250	25	18	0.82	49	710	57	680
14	I	250	DI	18	0.66	49	605	57	580
16	I	150	30	6	0.70	27	495	35	460
16	II	250	30	6	0.89	27	595	35	545
16	I	250	DI	6	0.70	27	495	35	460
16	I	150	30	12	0.70	40	635	48	600
16	II	250	30	12	0.89	40	770	48	720
16	I	250	DI	12	0.70	40	635	48	600
16	I	150	30	18	0.70	50	745	58	710
16	II	250	30	18	0.89	50	910	58	860
16	I	250	DI	18	0.70	50	745	58	710

Dimension details of bells are given in Table 10.12; those of spigots, Table 10.13.
† Bell design.
‡ Pressure rating.
§ Iron strength.
* Ductile iron.

C104–64). Cement linings, if desired, shall be specified on the purchase order.

[NOTE: Cement linings are recommended for most waters.]

10–8.3. *Bituminous inside coating.* The inside coating for fittings not cement lined shall be a bituminous material similar to the standard outside coating and as thick as practicable (at least 1 mil). The coating, after drying 48 hr, shall impart no objectionable color, odor, or taste to water in contact with the coating for a minimum of 48 hr. The bituminous inside coating shall be applied to the inside surface of all fittings unless otherwise specified.

[NOTE: Experience has indicated that such coating is not complete protection against loss in flow capacity due to tuberculation.]

10–8.4. *Special coatings and linings.* For special conditions, other types of coatings and linings may be available. Such special coatings and linings shall be agreed upon at the time of purchase and shall be specified on the purchase order.

Sec. 10–9—Markings on Fittings

Fittings 3 in. and larger shall be marked with the weight and shall have distinctly cast upon them the pressure rating, the manufacturer's identification, nominal diameter of openings, and the number of degrees or fraction of the circle on all bends. In addition, flanged fittings of less than 3-in. diameter shall have the pressure rating cast upon them. Ductile-iron fittings shall have the letters "DI" or "Ductile" cast or stamped on them. Cast letters and figures shall be on the outside and shall have dimensions no smaller than those shown below:

Size in.	Height of Letters in.	Relief in.
Less than 3	As large as practical	As large as practical
3–10	$\frac{3}{4}$	$\frac{3}{32}$
12–48	$1\frac{1}{4}$	$\frac{3}{32}$

Sec. 10–10—Acceptance Tests

10–10.1. *Physical test—gray-iron fittings.* The standard acceptance test for the physical characteristics of gray-iron fittings shall be one of the following:

1. Transverse test conducted in accordance with ASTM A438–62.
2. Tensile test conducted in accordance with ASTM A48–62.

10–10.2. *Choice of tests.* Unless specified by the purchaser, either the tensile test or the transverse test, at the option of the manufacturer, shall be used as the acceptance test. For sampling, each heat shall be divided into periods of approximately 3 hr, and at least one sample shall be taken during each period. The acceptance values for tensile and transverse tests shall be as shown in the following table:

IS* psi (1,000's)	Fitting Size in.	Bar Diam. in.	Span‡ in.	Min.‡ Breaking Load lb	Min. Tensile Strength† psi (1,000's)
25	2–14	1.20	18	2,000	25
30	14–24	1.20	18	2,200	30
30	20–48	2.00	24	7,600	30
35	16–24	1.20	18	2,400	35
35	20–36	2.00	24	8,300	35

* Iron strength.
† ASTM A48-62.
‡ ASTM A438-62.

For 20- and 24-in. fittings with a body thickness greater than 1 in., a 2-in. test bar shall be used.

10–10.3. *Physical tests—ductile-iron fittings.* The standard acceptance test

for the physical characteristics of ductile-iron fittings shall be a tensile test from coupons cast from the same iron as the fittings. The coupons shall be cast and the tests made in accordance with ASTM A 339–55, Grade 80–60–03. Either the keel block or "Y" block shall be used as the test coupons, at the option of the manufacturer. The acceptance values shall be as follows: minimum tensile strength, 80,000 psi; minimum yield strength, 60,000 psi; minimum elongation, 3 per cent.

Sec. 10–11—Chemical Analyses of Gray-Iron Fittings

Analyses of the iron in gray-iron fittings shall be made at sufficiently frequent intervals during the heat to assure compliance with the following limits: phosphorus, 0.90 per cent maximum; and sulfur, 0.12 per cent maximum.

Control of the other chemical constituents shall be maintained to meet the physical property requirements of this standard. Samples for chemical analyses shall be representative and shall be obtained by drilling either acceptance test specimens or specimens cast for this purpose.

Sec. 10–12—Additional Tests Required by Purchaser

If tests other than those provided in this standard are required by the purchaser, such tests shall be specified in the invitation for bids and on the purchase order. Although it is not customary to make hydrostatic proof tests of fittings at the foundry, such tests may be made on special order at additional cost.

Sec. 10–13—Defective Specimens and Retests

When any physical-test specimen shows defective machining or lack of continuity of metal, it shall be discarded and replaced by another specimen cast in the same sampling period as the specimen that failed.

TABLE 10.17—*Bell-and-Spigot Reducers (contd.)*

End Size *in.*		Bell Design	Pressure Rating *psi*	Iron Strength *psi* (*1,000's*)	Thickness *in.*		Bell & Bell		Small-End Bell		Large-End Bell		Spigot & Spigot	
Lg.	Sm.				*T*	T_1	*L* *in.*	Wgt. *lb*	*L* *in.*	Wgt. *lb*	*L* *in.*	Wgt. *lb*	*L* *in.*	Wgt. *lb*
24	16	I	250	DI*	0.89	0.70	24	645	32	595	32	610	40	560
24	18	I	150	30	0.89	0.75	24	690	32	640	32	650	40	600
24	18	II	250	30	1.16	0.96	24	850	32	755	32	795	40	700
24	18	I	250	DI	0.89	0.75	24	690	32	640	32	650	40	600
24	20	I	150	30	0.89	0.80	24	735	32	685	32	690	40	640
24	20	II	250	30	1.16	1.03	24	920	32	825	32	845	40	750
24	20	I	250	DI	0.89	0.80	24	735	32	685	32	690	40	640
30	18	I	150	30	1.03	0.75	30	990	38	905	38	950	46	865
30	18	II	250	30	1.37	0.96	30	1,285	38	1,090	38	1,225	46	1,030
30	18	I	250	DI	1.03	0.75	30	990	38	905	38	950	46	865
30	20	I	150	30	1.03	0.80	30	1,050	38	965	38	1,005	46	920
30	20	II	250	30	1.37	1.03	30	1,365	38	1,170	38	1,290	46	1,095
30	20	I	250	DI	1.03	0.80	30	1,050	38	965	38	1,005	46	920
30	24	I	150	30	1.03	0.89	30	1,160	38	1,075	38	1,110	46	1,025
30	24	II	250	30	1.37	1.16	30	1,515	38	1,320	38	1,415	46	1,220
30	24	I	250	DI	1.03	0.89	30	1,160	38	1,075	38	1,110	46	1,025
36	20	I	150	30	1.15	0.80	36	1,465	44	1,305	44	1,425	52	1,260
36	20	II	250	30	1.58	1.03	36	1,900	44	1,610	44	1,830	52	1,540
36	20	I	250	DI	1.15	0.80	36	1,465	44	1,305	44	1,425	52	1,260
36	24	I	150	30	1.15	0.89	36	1,595	44	1,435	44	1,545	52	1,380
36	24	II	250	30	1.58	1.16	36	2,075	44	1,785	44	1,975	52	1,685
36	24	I	250	DI	1.15	0.89	36	1,595	44	1,435	44	1,545	52	1,380
36	30	I	150	30	1.15	1.03	36	1,840	44	1,675	44	1,755	52	1,590
36	30	II	250	30	1.58	1.37	36	2,445	44	2,155	44	2,250	52	1,960
36	30	I	250	DI	1.15	1.03	36	1,840	44	1,675	44	1,755	52	1,590
42	20	I	150	30	1.28	0.80	42	1,940	50	1,720	50	1,895	58	1,675
42	20	II	250	30	1.78	1.03	42	2,580	50	2,160	50	2,505	58	2,085
42	20	I	250	DI	1.28	0.80	42	1,940	50	1,720	50	1,895	58	1,675
42	24	I	150	30	1.28	0.89	42	2,090	50	1,870	50	2,040	58	1,820
42	24	II	250	30	1.78	1.16	42	2,770	50	2,350	50	2,675	58	2,255
42	24	I	250	DI	1.28	0.89	42	2,090	50	1,870	50	2,040	58	1,820
42	30	I	150	30	1.28	1.03	42	2,370	50	2,150	50	2,285	58	2,065
42	30	II	250	30	1.78	1.37	42	3,195	50	2,775	50	3,000	58	2,580
42	30	I	250	DI	1.28	1.03	42	2,370	50	2,150	50	2,285	58	2,065
42	36	I	150	30	1.28	1.15	42	2,710	50	2,495	50	2,550	58	2,330
42	36	II	250	30	1.78	1.58	42	3,655	50	3,235	50	3,365	58	2,945
42	36	I	250	DI	1.28	1.15	42	2,710	50	2,495	50	2,550	58	2,330
48	30	I	150	30	1.42	1.03	48	3,010	56	2,730	56	2,925	64	2,645
48	30	II	250	30	1.96	1.37	48	4,070	56	3,510	56	3,875	64	3,315
48	30	I	250	DI	1.42	1.03	48	3,010	56	2,730	56	2,925	64	2,645
48	36	I	150	30	1.42	1.15	48	3,390	56	3,110	56	3,230	64	2,950
48	36	II	250	30	1.96	1.58	48	4,585	56	4,025	56	4,295	64	3,735
48	36	I	250	DI	1.42	1.15	48	3,390	56	3,110	56	3,230	64	2,950
48	42	I	150	30	1.42	1.28	48	3,785	56	3,505	56	3,565	64	3,295
48	42	II	250	30	1.96	1.78	48	5,170	56	4,610	56	4,750	64	4,190
48	42	I	250	DI	1.42	1.28	48	3,785	56	3,505	56	3,565	64	3,295

Eccentric reducers with the same dimensions and weights given for concentric reducers are available from most manufacturers if specified on the purchase order. Dimension details for bells are shown in Table 10.12; for spigots, in Table 10.13.

* Ductile iron.

TABLE 10.17—*Bell-and-Spigot Reducers (contd.)*

End Size in.		Bell Design	Pressure Rating psi	Iron Strength psi (1,000's)	Thickness in.		Bell & Bell		Small-End Bell		Large-End Bell		Spigot & Spigot	
Lg.	Sm.				T	T_1	L in.	Wgt. lb	L in.	Wgt. lb	L in.	Wgt. lb	L in.	Wgt. lb
16	6	I	150	30	0.70	0.55	18	260	26	225	26	245	34	210
16	6	II	250	30	0.89	0.55	18	290	26	245	26	280	34	230
16	6	I	250	DI*	0.70	0.55	18	260	26	225	26	245	34	210
16	8	I	150	30	0.70	0.60	18	285	26	250	26	270	34	235
16	8	II	250	30	0.89	0.60	18	320	26	270	26	300	34	255
16	8	I	250	DI	0.70	0.60	18	285	26	250	26	270	34	235
16	10	I	150	30	0.70	0.68	18	320	26	285	26	300	34	265
16	10	II	250	30	0.89	0.68	18	350	26	300	26	330	34	280
16	10	I	250	DI	0.70	0.68	18	320	26	285	26	300	34	265
16	12	I	150	30	0.70	0.75	18	345	26	315	26	330	34	295
16	12	II	250	30	0.89	0.75	18	380	26	330	26	360	34	315
16	12	I	250	DI	0.70	0.75	18	345	26	315	26	330	34	295
16	14	I	150	30	0.70	0.66	18	360	26	325	26	340	34	305
16	14	II	250	30	0.89	0.82	18	415	26	365	26	385	34	340
16	14	I	250	DI	0.70	0.66	18	360	26	325	26	340	34	305
18	8	I	150	30	0.75	0.60	19	330	27	290	27	310	35	275
18	8	II	250	30	0.96	0.60	19	375	27	315	27	355	35	300
18	8	I	250	DI	0.75	0.60	19	330	27	290	27	310	35	275
18	10	I	150	30	0.75	0.68	19	360	27	325	27	345	35	305
18	10	II	250	30	0.96	0.68	19	405	27	350	27	385	35	330
18	10	I	250	DI	0.75	0.68	19	360	27	325	27	345	35	305
18	12	I	150	30	0.75	0.75	19	390	27	350	27	375	35	335
18	12	II	250	30	0.96	0.75	19	440	27	380	27	420	35	365
18	12	I	250	DI	0.75	0.75	19	390	27	350	27	375	35	335
18	14	I	150	30	0.75	0.66	19	405	27	365	27	380	35	345
18	14	II	250	30	0.96	0.82	19	475	27	415	27	445	35	390
18	14	I	250	DI	0.75	0.66	19	405	27	365	27	380	35	345
18	16	I	150	30	0.75	0.70	19	450	27	410	27	415	35	375
18	16	II	250	30	0.96	0.89	19	530	27	470	27	480	35	425
18	16	I	250	DI	0.75	0.70	19	450	27	410	27	415	35	375
20	10	I	150	30	0.80	0.68	20	410	28	370	28	395	36	350
20	10	II	250	30	1.03	0.68	20	475	28	400	28	455	36	385
20	10	I	250	DI	0.80	0.68	20	410	28	370	28	395	36	350
20	12	I	150	30	0.80	0.75	20	445	28	400	28	430	36	385
20	12	II	250	30	1.03	0.75	20	510	28	435	28	490	36	420
20	12	I	250	DI	0.80	0.75	20	445	28	400	28	430	36	385
20	14	I	150	30	0.80	0.66	20	455	28	410	28	430	36	390
20	14	II	250	30	1.03	0.82	20	545	28	475	28	515	36	445
20	14	I	250	DI	0.80	0.66	20	455	28	410	28	430	36	390
20	16	I	150	30	0.80	0.70	20	505	28	460	28	470	36	425
20	16	II	250	30	1.03	0.89	20	600	28	530	28	555	36	480
20	16	I	250	DI	0.80	0.70	20	505	28	460	28	470	36	425
20	18	I	150	30	0.80	0.75	20	540	28	500	28	505	36	460
20	18	II	250	30	1.03	0.96	20	655	28	580	28	595	36	525
20	18	I	250	DI	0.80	0.75	20	540	28	500	28	505	36	460
24	12	I	150	30	0.89	0.75	24	590	32	540	32	570	40	520
24	12	II	250	30	1.16	0.75	24	695	32	595	32	675	40	580
24	12	I	250	DI	0.89	0.75	24	590	32	540	32	570	40	520
24	14	I	150	30	0.89	0.66	24	600	32	545	32	575	40	525
24	14	II	250	30	1.16	0.82	24	735	32	635	32	705	40	610
24	14	I	250	DI	0.89	0.66	24	600	32	545	32	575	40	525
24	16	I	150	30	0.89	0.70	24	645	32	595	32	610	40	560
24	16	II	250	30	1.16	0.89	24	795	32	700	32	750	40	650

Eccentric reducers with the same dimensions and weights given for concentric reducers are available from most manufacturers if specified on the purchase order. Dimension details for bells are shown in Table 10.12; for spigots, in Table 10.13.

* Ductile iron.

Index to Tables

Mechanical-Joint Fittings

TABLE PAGE

10.1—Dimensions 6
10.2—Dimensions and Tolerances (Plain End) 7
10.3—Bends 9
10.4—Tees and Crosses 13
10.5—Base Fittings (Bends and Tees) 19
10.6—Reducers 21
10.7—Offsets 24
10.8—Tapped Tees 24
10.9—Sleeves 26
10.10—Caps and Plugs 26
10.11—Connecting Pieces 28

Bell-and-Spigot Fittings

10.12—Bell-and-Spigot Bell Dimensions and Tolerances 29
10.13—Bell-and-Spigot Spigot End Dimensions and Tolerances 30
10.14—Bell-and-Spigot Bends 33
10.15—Bell-and-Spigot Tees and Crosses 37
10.16—Bell-and-Spigot Base Fittings (Bends and Tees) 43
10.17—Bell-and-Spigot Reducers ..45
10.18—Bell-and-Spigot Offsets 48
10.19—Bell-and-Spigot Tapped Tees 49
10.20—Bell-and-Spigot Sleeves 49
10.21—Caps and Plugs 50
10.22—Connecting Pieces 51

Flanged Fittings

10.23—Flange Details 52
10.24—Base Drilling Detail 52
10.25—Flanged Bends 53
10.26—Flanged Tees and Crosses ..54
10.27—Flanged Base Fittings (Tees and Bends) 58
10.28—Flanged Reducers 61

TABLE 10.1—*Standard Mechanical-Joint Dimensions, in Inches*

Size *in.*	Plain End *A*	*B*	*C*	*D*	*F*	ϕ *deg*	*X*	*J*	K_1	K_2	*L*	*M*	*N*	*O*	*P*	*S*	*Y*	Bolts No.	Bolts Size	Bolts Lgth.	Weight—*lb* Bell	Weight—*lb* Gland Bolts Gasket
2	2.50 ±.05	2.50	3.39 ±.05	3.50 ±.05	2.61 ±.05	28	$\frac{3}{8}$ +.06 −.0	4.75 ±.05	6.25 −.10	6.25 −.10	.75 −.05	.62 −.05	.50	.31	.63	.44 −.07	.08	2	$\frac{3}{4}$	$2\frac{1}{2}$	5.5	3.5
$2\frac{1}{2}$	2.75 ±.05	2.50	3.64 ±.05	3.75 ±.05	2.86 ±.05	28	$\frac{3}{8}$ +.06 −.0	5.00 ±.05	6.50 −.10	6.50 −.10	.75 −.05	.62 −.05	.50	.31	.63	.44 −.07	.08	2	$\frac{3}{4}$	$2\frac{1}{2}$	6	4
3	3.96 ±.06	2.50	4.84 ±.04	4.94 +.06 −.04	4.06 +.07 −.03	28	$\frac{3}{8}$ +.06 −.0	6.19 ±.06	7.69 −.12	7.69 −.12	.94 −.06	.62 −.06	.75	.31	.63	.52 −.10	.12	4	$\frac{3}{4}$	3	11	7
4	4.80 ±.06	2.50	5.92 ±.04	6.02 +.06 −.04	4.90 +.07 −.03	28	$\frac{3}{8}$ +.06 −.0	7.50 ±.06	9.12 −.12	9.12 −.12	1.00 −.06	.75 −.06	.75	.31	.75	.65 −.10	.12	4	$\frac{3}{4}$	$3\frac{1}{2}$	16	10
6	6.90 ±.06	2.50	8.02 ±.04	8.12 +.06 −.04	7.00 +.07 −.03	28	$\frac{3}{8}$ +.06 −.0	9.50 ±.06	11.12 −.12	11.12 −.12	1.06 −.06	.88 −.06	.75	.31	.75	.70 −.10	.12	6	$\frac{3}{4}$	$3\frac{1}{2}$	23	16
8	9.05 ±.06	2.50	10.17 ±.04	10.27 +.06 −.04	9.15 +.07 −.03	28	$\frac{3}{8}$ +.06 −.0	11.75 ±.06	13.37 −.12	13.37 −.12	1.12 −.08	1.00 −.08	.75	.31	.75	.75 −.12	.12	6	$\frac{3}{4}$	4	31	25
10	11.10 ±.06	2.50	12.22 +.06 −.04	12.34 +.06 −.04	11.20 +.07 −.03	28	$\frac{3}{8}$ +.06 −.0	14.00 ±.06	15.62 −.12	15.62 −.12	1.19 −.08	1.00 −.08	.75	.31	.75	.80 −.12	.12	8	$\frac{3}{4}$	4	41	30
12	13.20 ±.06	2.50	14.32 +.06 −.04	14.44 +.06 −.04	13.30 +.07 −.03	28	$\frac{3}{8}$ +.06 −.0	16.25 ±.06	17.88 −.12	17.94 −.12	1.25 −.08	1.00 −.08	.75	.31	.75	.85 −.12	.12	8	$\frac{3}{4}$	4	51	40
14	15.30 +.05 −.08	3.50	16.40 +.07 −.05	16.54 +.07 −.05	15.44 +.06 −.07	28	$\frac{3}{8}$ +.06 −.0	18.75 ±.06	20.25 −.12	20.31 −.12	1.31 −.12	1.25 −.12	.75	.31	.75	.89 −.12	.12	10	$\frac{3}{4}$	4	79	45
16	17.40 +.05 −.08	3.50	18.50 +.07 −.05	18.64 +.07 −.05	17.54 +.06 −.07	28	$\frac{3}{8}$ +.06 −.0	21.00 ±.06	22.50 −.12	22.56 −.12	1.38 −.12	1.31 −.12	.75	.31	.75	.97 −.12	.12	12	$\frac{3}{4}$	$4\frac{1}{2}$	97	55
18	19.50 +.05 −.08	3.50	20.60 +.07 −.05	20.74 +.07 −.05	19.64 +.06 −.07	28	$\frac{3}{8}$ +.06 −.0	23.25 ±.06	24.75 −.15	24.83 −.15	1.44 −.12	1.38 −.12	.75	.31	.75	1.05 −.15	.12	12	$\frac{3}{4}$	$4\frac{1}{2}$	117	65
20	21.60 +.05 −.08	3.50	22.70 +.07 −.05	22.84 +.07 −.05	21.74 +.06 −.07	28	$\frac{3}{8}$ +.06 −.0	25.50 ±.06	27.00 −.15	27.08 −.15	1.50 −.12	1.44 −.12	.75	.31	.75	1.12 −.15	.12	14	$\frac{3}{4}$	$4\frac{1}{2}$	140	85
24	25.80 +.05 −.08	3.50	26.90 +.07 −.05	27.04 +.07 −.05	25.94 +.06 −.07	28	$\frac{3}{8}$ +.06 −.0	30.00 ±.06	31.50 −.15	31.58 −.15	1.62 −.12	1.56 −.12	.75	.31	.75	1.22 −.15	.12	16	$\frac{3}{4}$	5	185	105
30	32.00 +.08 −.06	4.00	33.29 +.08 −.06	33.46 +.08 −.06	32.17 +.08 −.06	20	$\frac{1}{2}$ +.06 −.0	36.88 ±.06	39.12 −.18	39.12 −.18	1.81 −.12	2.00 −.12	.75	.38	1.00	1.50 −.15	.12	20	1	6	315	220
36	38.30 +.08 −.06	4.00	39.59 +.08 −.06	39.76 +.08 −.06	38.47 +.08 −.06	20	$\frac{1}{2}$ +.06 −.0	43.75 ±.06	46.00 −.18	46.00 −.18	2.00 −.12	2.00 −.12	.75	.38	1.00	1.80 −.15	.12	24	1	6	445	285
42	44.50 +.08 −.06	4.00	45.79 +.08 −.06	45.96 +.08 −.06	44.67 +.08 −.06	20	$\frac{1}{2}$ +.06 −.0	50.62 ±.06	53.12 −.18	53.12 −.18	2.00 −.12	2.00 −.12	.75	.38	1.00	1.95 −.15	.12	28	$1\frac{1}{4}$	6	570	400
48	50.80 +.08 −.06	4.00	52.09 +.08 −.06	52.26 +.08 −.06	50.97 +.08 −.06	20	$\frac{1}{2}$ +.06 −.0	57.50 ±.06	60.00 −.18	60.00 −.18	2.00 −.12	2.00 −.12	.75	.38	1.00	2.20 −.15	.12	32	$1\frac{1}{4}$	6	725	475

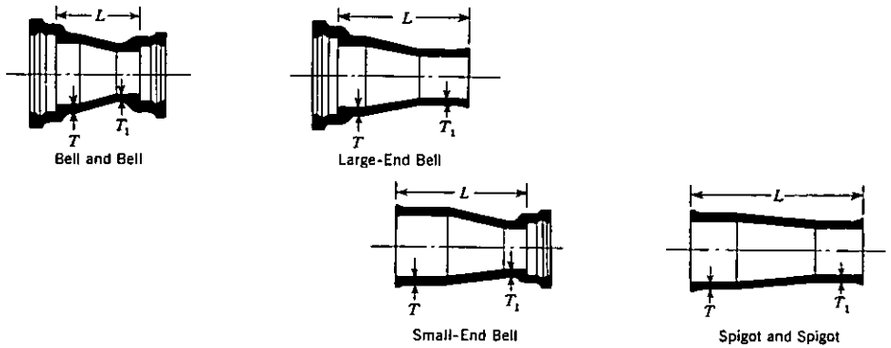

Fig. 10.17. Bell-and-Spigot Reducers (See Table 10.17)

TABLE 10.17

Bell-and-Spigot Reducers

End Size *in.* Lg.	End Size *in.* Sm.	Bell Design	Pressure Rating *psi*	Iron Strength *psi* (*1,000's*)	Thickness *in.* *T*	Thickness *in.* T_1	Bell & Bell *L in.*	Bell & Bell Wgt. *lb*	Small-End Bell *L in.*	Small-End Bell Wgt. *lb*	Large-End Bell *L in.*	Large-End Bell Wgt. *lb*	Spigot & Spigot *L in.*	Spigot & Spigot Wgt. *lb*
4	3		250	25	0.52	0.48	7	55	15	45	15	45	23	35
6	3		250	25	0.55	0.48	9	75	17	60	17	65	25	55
6	4		250	25	0.55	0.52	9	80	17	65	17	70	25	55
8	4		250	25	0.60	0.52	11	110	19	95	19	100	27	80
8	6		250	25	0.60	0.55	11	125	19	110	19	110	27	95
10	4		250	25	0.68	0.52	12	135	20	115	20	125	28	105
10	6		250	25	0.68	0.55	12	150	20	130	20	135	28	120
10	8		250	25	0.68	0.60	12	170	20	150	20	155	28	135
12	4		250	25	0.75	0.52	14	165	22	145	22	155	30	135
12	6		250	25	0.75	0.55	14	185	22	165	22	170	30	155
12	8		250	25	0.75	0.60	14	210	22	190	22	195	30	175
12	10		250	25	0.75	0.68	14	235	22	215	22	215	30	200
14	6	I	150	25	0.66	0.55	16	210	24	190	24	200	32	175
14	6	II	250	25	0.82	0.55	16	230	24	200	24	215	32	185
14	6	I	250	DI*	0.66	0.55	16	210	24	190	24	200	32	175
14	8	I	150	25	0.66	0.60	16	235	24	205	24	220	32	195
14	8	II	250	25	0.82	0.60	16	255	24	225	24	235	32	210
14	8	I	250	DI	0.66	0.60	16	235	24	205	24	220	32	195
14	10	I	150	25	0.66	0.68	16	260	24	235	24	240	32	220
14	10	II	250	25	0.82	0.68	16	280	24	250	24	260	32	235
14	10	I	250	DI	0.66	0.68	16	260	24	235	24	240	32	220
14	12	I	150	25	0.66	0.75	16	290	24	265	24	270	32	250
14	12	II	250	25	0.82	0.75	16	310	24	280	24	290	32	265
14	12	I	250	DI	0.66	0.75	16	290	24	265	24	270	32	250

Eccentric reducers with the same dimensions and weights given for concentric reducers are available from most manufacturers if specified on purchase order. Dimension details for bells are shown in Table 10.12; for spigots, in Table 10.13.

* Ductile iron.

TABLE 10.16—*Bell-and-Spigot Base Fittings (contd.)*

Size *in.*	Bell Design	Pressure Rating *psi*	Iron Strength *psi* (*1,000's*)	Dimensions—*in.*				Weight—*lb*		Weight (Base Only) *lb*
				R†	*S* Diam.	*T*	*U*	*B* & *B*	*B* & *S*	
Base Tees										
3		250	25	4.88	5.00	0.56	0.50	85	75	5
4		250	25	5.50	6.00	0.62	0.50	115	105	10
6		250	25	7.00	7.00	0.69	0.62	175	160	15
8		250	25	8.38	9.00	0.94	0.88	270	255	30
10		250	25	9.75	9.00	0.94	0.88	400	380	30
12		250	25	11.25	11.00	1.00	1.00	530	510	45
14	I	150	25	12.50	11.00	1.00	1.00	680	650	50
14	II	250	30	12.50	11.00	1.00	1.00	680	650	50
14	I	250	DI*	12.50	11.00	1.00	1.00	595	570	50
16	I	150	30	13.75	11.00	1.00	1.00	880	830	50
16	II	250	35	13.75	11.00	1.00	1.00	880	830	50
16	I	250	DI	13.75	11.00	1.00	1.00	745	710	50
18	II	150	30	15.00	13.50	1.12	1.12	1,125	1,065	75
18	II	250	35	15.00	13.50	1.12	1.12	1,125	1,065	75
18	I	250	DI	15.00	13.50	1.12	1.12	940	900	75
20	II	150	35	16.00	13.50	1.12	1.12	1,400	1,355	75
20	I	250	DI	16.00	13.50	1.12	1.12	1,140	1,090	75
24	II	150	35	18.50	13.50	1.12	1.12	2,085	1,980	80
24	I	250	DI	18.50	13.50	1.12	1.12	1,645	1,590	80
30	II	150	35	23.00	16.00	1.19	1.15	3,170	3,080	120
30	I	250	DI	23.00	16.00	1.19	1.15	2,640	2,550	120
36	II	150	35	26.00	19.00	1.25	1.15	4,755	4,575	160
36	I	250	DI	26.00	19.00	1.25	1.15	3,880	3,705	160
42	I	150	DI	30.00	23.50	1.44	1.28	5,365	5,130	270
42	II	250	DI	30.00	23.50	1.44	1.28	6,645	6,410	270
48	I	150	DI	34.00	25.00	1.56	1.42	7,115	6,810	335
48	II	250	DI	34.00	25.00	1.56	1.42	8,815	8,510	335

† Dimension *R* is a finished dimension; unfinished bases will be ⅛ in. longer. Base drilling is shown in Table 10.24.
* Ductile iron.

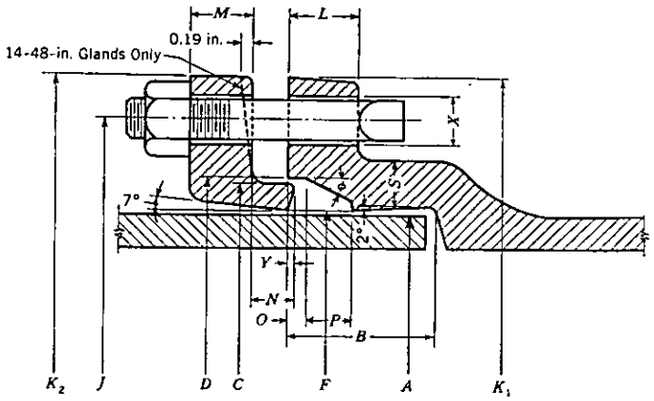

Fig. 10.1. 2–48-in. Standard Mechanical-Joint Dimensions (See Table 10.1)

1. The thickness of the bell, S, shall in all instances be at least equal to and generally exceeds by at least 10 per cent the nominal wall thickness of the fitting of which it is a part.

2. Cored holes may be tapered an additional 0.06 in. in diameter.

3. In the event of ovalness of the plain end OD, the mean diameter measured by a circumferential tape shall not be less than the minimum diameter shown in the table. The minor axis shall not be less than the above minimum diameter plus an additional minus tolerance of 0.04 in. for sizes 8–12 in., 0.07 in. for sizes 14–24 in., and 0.10 in. for sizes 30–48 in.

4. K_1 and K_2 are the dimensions across the bolt holes. For sizes 2 and 2½ in. both flange and gland may be oval shaped. For sizes 3–48 in., the gland may be polygon shaped.

TABLE 10.2

Plain-end Dimensions and Tolerances for Mechanical-Joint Fittings

Size *in.*	*A*—*in.*	T_2—*in.*	Weight of Plain End *lb*
3	3.96±0.06	0.48−0.10	11
4	4.80±0.06	0.47−0.10	13
6	6.90±0.06	0.50−0.10	21
8	9.05±0.06	0.54−0.12	30
10	11.10±0.06	0.60−0.12	41
12	13.20±0.06	0.68−0.12	56
14	$15.30^{+0.05}_{-0.08}$	0.66−0.12	63
16	$17.40^{+0.05}_{-0.08}$	0.70−0.12	76
18	$19.50^{+0.05}_{-0.08}$	0.75−0.12	92
20	$21.60^{+0.05}_{-0.08}$	0.80−0.12	109
24	$25.80^{+0.05}_{-0.08}$	0.89−0.15	145
30	$32.00^{+0.08}_{-0.06}$	1.03−0.15	208
36	$38.30^{+0.08}_{-0.06}$	1.15−0.15	279
42	$44.50^{+0.08}_{-0.06}$	1.28−0.15	361
48	$50.80^{+0.08}_{-0.06}$	1.42−0.15	458

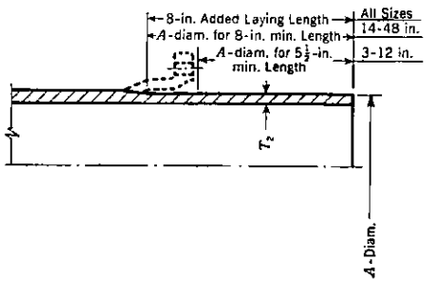

Fig. 10.2. Mechanical-Joint Plain-End Dimensions and Tolerances (See Table 10.2)
Bell contour shown indicates bottom of socket as located in standard all-bell fittings.

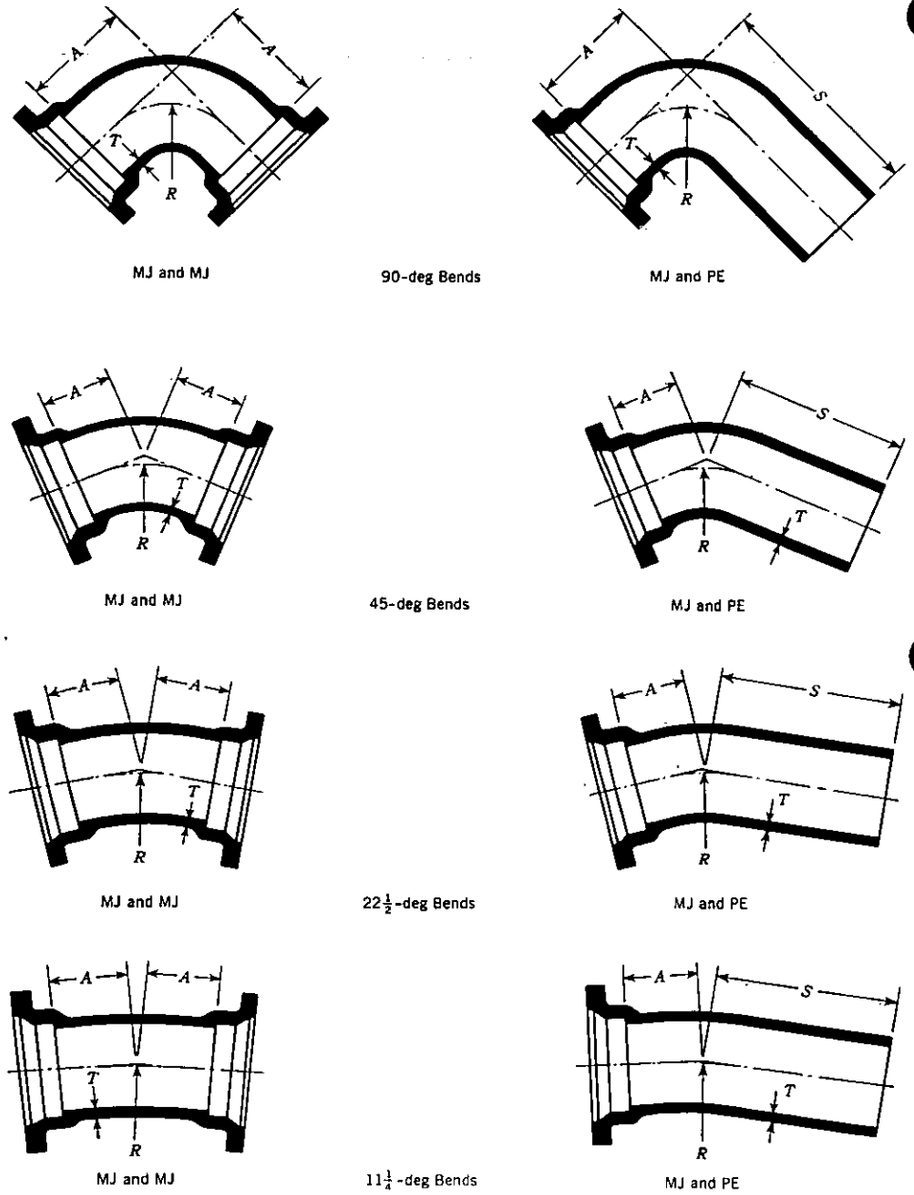

Fig. 10.3. Mechanical-Joint Bends (See Table 10.3)

TABLE 10.16

Bell-and-Spigot Base Fittings

Size *in.*	Bell Design	Pressure Rating *psi*	Iron Strength *psi* (*1,000's*)	Dimensions—*in.*				Weight—*lb*		Weight (Base Only) *lb*
				R†	*S* Diam.	*T*	*U*	*B* & *B*	*B* & *S*	
Base Bends										
3		250	25	4.88	5.00	0.56	0.50	65	55	10
4		250	25	5.50	6.00	0.62	0.50	80	70	10
6		250	25	7.00	7.00	0.69	0.62	130	115	20
8		250	25	8.38	9.00	0.94	0.88	205	190	40
10		250	25	9.75	9.00	0.94	0.88	275	255	45
12		250	25	11.25	11.00	1.00	1.00	370	350	65
14	I	150	25	12.50	11.00	1.00	1.00	430	405	70
14	II	250	25	12.50	11.00	1.00	1.00	480	455	70
14	I	250	DI*	12.50	11.00	1.00	1.00	430	405	70
16	I	150	30	13.75	11.00	1.00	1.00	540	505	75
16	II	250	30	13.75	11.00	1.00	1.00	620	575	75
16	I	250	DI	13.75	11.00	1.00	1.00	540	505	75
18	I	150	30	15.00	13.50	1.12	1.12	690	655	115
18	II	250	30	15.00	13.50	1.12	1.12	810	750	115
18	I	250	DI	15.00	13.50	1.12	1.12	690	655	115
20	I	150	30	16.00	13.50	1.12	1.12	830	790	120
20	II	250	30	16.00	13.50	1.12	1.12	1,000	925	120
20	I	250	DI	16.00	13.50	1.12	1.12	830	790	120
24	I	150	30	18.50	13.50	1.12	1.12	1,185	1,130	130
24	II	250	30	18.50	13.50	1.12	1.12	1,465	1,365	130
24	I	250	DI	18.50	13.50	1.12	1.12	1,185	1,130	130
30	I	150	30	23.00	16.00	1.19	1.15	1,850	1,765	190
30	II	250	30	23.00	16.00	1.19	1.15	2,400	2,210	190
30	I	250	DI	23.00	16.00	1.19	1.15	1,850	1,765	190
36	I	150	30	26.00	19.00	1.25	1.15	2,730	2,565	250
36	II	250	30	26.00	19.00	1.25	1.15	3,555	3,265	250
36	I	250	DI	26.00	19.00	1.25	1.15	2,730	2,565	250
42	I	150	30	30.00	23.50	1.44	1.28	3,850	3,630	410
42	II	250	30	30.00	23.50	1.44	1.28	5,100	4,680	410
42	I	250	DI	30.00	23.50	1.44	1.28	3,850	3,630	410
48	I	150	30	34.00	25.00	1.56	1.42	5,150	4,870	515
48	II	250	30	34.00	25.00	1.56	1.42	6,855	6,295	515
48	I	250	DI	34.00	25.00	1.56	1.42	5,150	4,870	515

† Dimension *R* is a finished dimension; unfinished bases will be ½ in. longer. Base drilling is shown in Table 10.24.

* Ductile iron.

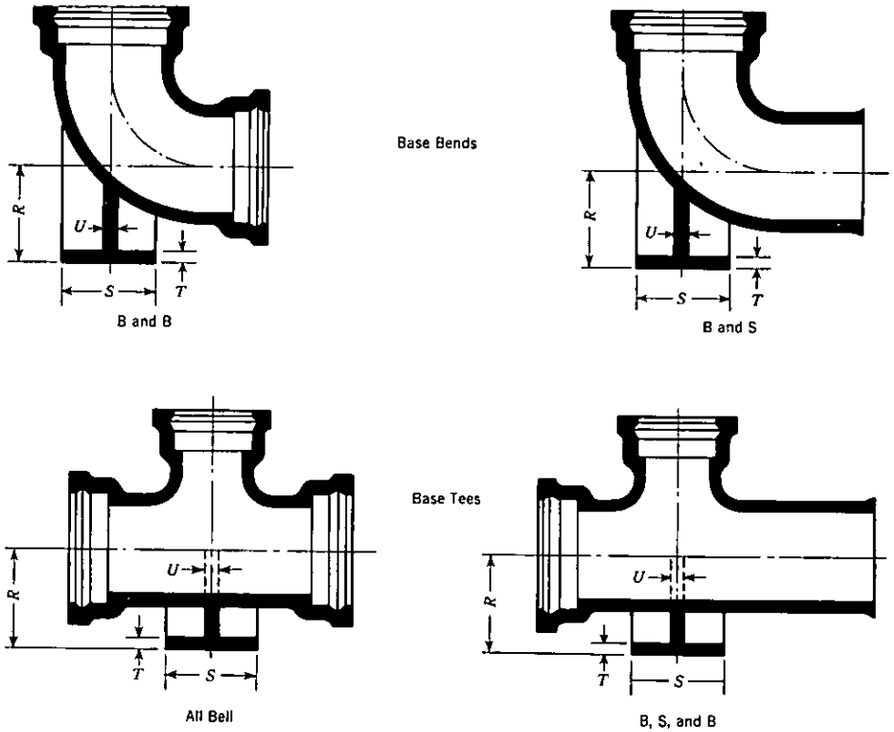

Fig. 10.16. Bell-and-Spigot Base Bends and Bell-and-Spigot Base Tees (See Table 10.16)
For other dimensions for base bends, see Table 10.14: for other dimensions for base tees, see Table 10.15.

TABLE 10.3
Mechanical-Joint Bends

Size *in.*	Pressure Rating *psi*	Iron Strength *psi (1,000's)*	Dimensions—*in.*				Weight—*lb*	
			T	*A*	*S*	*R*	MJ & MJ	MJ & PE
90-deg Bends								
2	250	25	0.35	3.25		2.25	14	
2½	250	25	0.35	3.25		2.25	15	
3	250	25	0.48	5.5	13.5	4.0	35	35
4	250	25	0.52	6.5	14.5	4.5	55	50
6	250	25	0.55	8.0	16.0	6.0	85	80
8	250	25	0.60	9.0	17.0	7.0	125	120
10	250	25	0.68	11.0	19.0	9.0	190	190
12	250	25	0.75	12.0	20.0	10.0	255	255
14	150	25	0.66	14.0	22.0	11.5	340	325
14	250	25	0.82	14.0	22.0	11.5	380	365
14	250	DI*	0.66	14.0	22.0	11.5	340	325
16	150	30	0.70	15.0	23.0	12.5	430	410
16	250	30	0.89	15.0	23.0	12.5	490	470
16	250	DI	0.70	15.0	23.0	12.5	430	410
18	150	30	0.75	16.5	24.5	14.0	545	520
18	250	30	0.96	16.5	24.5	14.0	625	600
18	250	DI	0.75	16.5	24.5	14.0	545	520
20	150	30	0.80	18.0	26.0	15.5	680	650
20	250	30	1.03	18.0	26.0	15.5	790	755
20	250	DI	0.80	18.0	26.0	15.5	680	650
24	150	30	0.89	22.0	30.0	18.5	1,025	985
24	250	30	1.16	22.0	30.0	18.5	1,215	1,175
24	250	DI	0.89	22.0	30.0	18.5	1,025	985
30	150	30	1.03	25.0	33.0	21.5	1,690	1,585
30	250	30	1.37	25.0	33.0	21.5	2,030	1,920
30	250	DI	1.03	25.0	33.0	21.5	1,690	1,585
36	150	30	1.15	28.0	36.0	24.5	2,475	2,310
36	250	30	1.58	28.0	36.0	24.5	3,045	2,880
36	250	DI	1.15	28.0	36.0	24.5	2,475	2,310
42	150	30	1.28	31.0	39.0	27.5	3,410	3,200
42	250	30	1.78	31.0	39.0	27.5	4,255	4,050
42	250	DI	1.28	31.0	39.0	27.5	3,410	3,200
48	150	30	1.42	34.0	42.0	30.5	4,595	4,330
48	250	30	1.96	34.0	42.0	30.5	5,745	5,475
48	250	DI	1.42	34.0	42.0	30.5	4,595	4,330

Dimension details of mechanical-joint bell are shown in Table 10.1: dimension details of plain ends are shown in Table 10.2.
* Ductile iron.

TABLE 10.3—*Mechanical-Joint Bends (contd.)*

Size *in.*	Pressure Rating *psi*	Iron Strength *psi (1,000's)*	Dimensions—*in.*				Weight—*lb*	
			T	*A*	*S*	*R*	MJ & MJ	MJ & PE
			45-deg Bends					
2	250	25	0.35	1.8		1.96	13	
2½	250	25	0.35	1.8		1.96	14	
3	250	25	0.48	3.0	11.0	3.62	30	30
4	250	25	0.52	4.0	12.0	4.81	50	45
6	250	25	0.55	5.0	13.0	7.25	75	70
8	250	25	0.60	5.5	13.5	8.44	110	105
10	250	25	0.68	6.5	14.5	10.88	155	155
12	250	25	0.75	7.5	15.5	13.25	215	215
14	150	25	0.66	7.5	15.5	12.06	270	255
14	250	25	0.82	7.5	15.5	12.06	300	280
14	250	DI*	0.66	7.5	15.5	12.06	270	255
16	150	30	0.70	8.0	16.0	13.25	340	320
16	250	30	0.89	8.0	16.0	13.25	380	360
16	250	DI	0.70	8.0	16.0	13.25	340	320
18	150	30	0.75	8.5	16.5	14.50	420	395
18	250	30	0.96	8.5	16.5	14.50	470	445
18	250	DI	0.75	8.5	16.5	14.50	420	395
20	150	30	0.80	9.5	17.5	16.88	530	500
20	250	30	1.03	9.5	17.5	16.88	595	565
20	250	DI	0.80	9.5	17.5	16.88	530	500
24	150	30	0.89	11.0	19.0	18.12	755	715
24	250	30	1.16	11.0	19.0	18.12	865	825
24	250	DI	0.89	11.0	19.0	18.12	755	715
30	150	30	1.03	15.0	23.0	27.75	1,380	1,275
30	250	30	1.37	15.0	23.0	27.75	1,620	1,510
30	250	DI	1.03	15.0	23.0	27.75	1,380	1,275
36	150	30	1.15	18.0	26.0	35.00	2,095	1,930
36	250	30	1.58	18.0	26.0	35.00	2,525	2,360
36	250	DI	1.15	18.0	26.0	35.00	2,095	1,930
42	150	30	1.28	21.0	29.0	42.25	2,955	2,745
42	250	30	1.78	21.0	29.0	42.25	3,635	3,425
42	250	DI	1.28	21.0	29.0	42.25	2,955	2,745
48	150	30	1.42	24.0	32.0	49.50	4,080	3,815
48	250	30	1.96	24.0	32.0	49.50	5,040	4,770
48	250	DI	1.42	24.0	32.0	49.50	4,080	3,815

Dimension details of mechanical-joint bell are shown in Table 10.1: dimension details of plain ends are shown in Table 10.2.
* Ductile iron.

TABLE 10.15—*Bell-and-Spigot Tees and Crosses (contd.)*

Size *in.*		Bell Design	Pressure Rating *psi*	Iron Strength *psi (1,000's)*	Dimensions—*in.*					Weight—*lb*			
										Tee		Cross	
Run	Br.†				*T*	T_1	*H*	*J*	*S*	All Bell	*B, S* & *B*	All Bell	*B, S, B* & *B*
42	12	I	150	30	1.28	0.75	23.00	30.00	31.00	3,620	3,380	3,730	3,495
42	12	II	250	30	1.78	0.75	23.00	30.00	31.00	4,880	4,425	4,970	4,520
42	12	I	250	DI*	1.28	0.75	23.00	30.00	31.00	3,620	3,380	3,730	3,495
42	14	I	150	30	1.28	0.66	23.00	30.00	31.00	3,620	3,385	3,730	3,495
42	14	II	250	30	1.78	0.82	23.00	30.00	31.00	4,900	4,445	5,010	4,560
42	14	I	250	DI	1.28	0.66	23.00	30.00	31.00	3,620	3,385	3,730	3,495
42	16	I	150	30	1.28	0.70	23.00	30.00	31.00	3,650	3,415	3,790	3,550
42	16	II	250	30	1.78	0.89	23.00	30.00	31.00	4,930	4,480	5,080	4,615
42	16	I	250	DI	1.28	0.70	23.00	30.00	31.00	3,650	3,415	3,790	3,550
42	18	I	150	30	1.28	0.75	23.00	30.00	31.00	3,670	3,435	3,825	3,590
42	18	II	250	30	1.78	0.96	23.00	30.00	31.00	4,960	4,505	5,135	4,680
42	18	I	250	DI	1.28	0.75	23.00	30.00	31.00	3,670	3,435	3,825	3,590
42	20	I	150	30	1.28	0.80	23.00	30.00	31.00	3,695	3,460	3,880	3,645
42	20	II	250	30	1.78	1.03	23.00	30.00	31.00	4,995	4,545	5,210	4,755
42	20	I	250	DI	1.28	0.80	23.00	30.00	31.00	3,695	3,460	3,880	3,645
42	24	II	150	30	1.78	1.16	23.00	30.00	31.00	5,065	4,610	5,345	4,890
42	24	I	250	DI	1.28	0.89	23.00	30.00	31.00	3,740	3,505	3,975	3,740
42	30	II	150	30	1.78	1.37	31.00	31.00	39.00	6,365	5,910	6,875	6,420
42	30	I	250	DI	1.28	1.03	31.00	31.00	39.00	4,665	4,430	5,035	4,800
42	36	I	150	DI	1.28	1.15	31.00	31.00	39.00	4,865	4,630	5,440	5,205
42	36	II	250	DI	1.78	1.58	31.00	31.00	39.00	6,115	5,875	6,695	6,460
42	42	I	150	DI	1.28	1.28	31.00	31.00	39.00	5,095	4,860	5,895	5,660
42	42	II	250	DI	1.78	1.78	31.00	31.00	39.00	6,375	6,140	7,220	6,985
48	12	I	150	30	1.42	0.75	26.00	34.00	34.00	4,940	4,635	5,050	4,750
48	12	II	250	30	1.96	0.75	26.00	34.00	34.00	6,695	6,090	6,790	6,185
48	12	I	250	DI	1.42	0.75	26.00	34.00	34.00	4,940	4,635	5,050	4,750
48	14	I	150	30	1.42	0.66	26.00	34.00	34.00	4,935	4,635	5,045	4,745
48	14	II	250	30	1.96	0.82	26.00	34.00	34.00	6,715	6,115	6,830	6,230
48	14	I	250	DI	1.42	0.66	26.00	34.00	34.00	4,935	4,635	5,045	4,745
48	16	I	150	30	1.42	0.70	26.00	34.00	34.00	4,965	4,665	5,105	4,800
48	16	II	250	30	1.96	0.89	26.00	34.00	34.00	6,750	6,145	6,895	6,295
48	16	I	250	DI	1.42	0.70	26.00	34.00	34.00	4,965	4,665	5,105	4,800
48	18	I	150	30	1.42	0.75	26.00	34.00	34.00	4,985	4,680	5,140	4,840
48	18	II	250	30	1.96	0.96	26.00	34.00	34.00	6,775	6,170	6,950	6,350
48	18	I	250	DI	1.42	0.75	26.00	34.00	34.00	4,985	4,680	5,140	4,840
48	20	I	150	30	1.42	0.80	26.00	34.00	34.00	5,010	4,705	5,190	4,890
48	20	II	250	30	1.96	1.03	26.00	34.00	34.00	6,810	6,210	7,025	6,420
48	20	I	250	DI	1.42	0.80	26.00	34.00	34.00	5,010	4,705	5,190	4,890
48	24	I	150	30	1.42	0.89	26.00	34.00	34.00	5,060	4,750	5,280	4,980
48	24	II	250	30	1.96	1.16	26.00	34.00	34.00	6,875	6,270	7,150	6,545
48	24	I	250	DI	1.42	0.89	26.00	34.00	34.00	5,060	4,750	5,280	4,980
48	30	II	150	30	1.96	1.37	26.00	34.00	34.00	7,055	6,455	7,515	6,910
48	30	I	250	DI	1.42	1.03	26.00	34.00	34.00	5,165	4,860	5,500	5,200
48	36	II	150	30	1.96	1.58	34.00	34.00	42.00	8,615	8,015	9,285	8,060
48	36	I	250	DI	1.42	1.15	34.00	34.00	42.00	6,325	6,025	6,835	6,530
48	42	I	150	DI	1.42	1.28	34.00	34.00	42.00	6,515	6,215	7,215	6,915
48	42	II	250	DI	1.96	1.78	34.00	34.00	42.00	8,195	7,955	8,900	8,600
48	48	I	150	DI	1.42	1.42	34.00	34.00	42.00	6,780	6,475	7,740	7,440
48	48	II	250	DI	1.96	1.96	34.00	34.00	42.00	8,480	8,175	9,470	9,165

Dimension details of bells are shown in Table 10.12; those of spigots, Table 10.13.
† Branch.
* Ductile iron.

TABLE 10.15—*Bell-and-Spigot Tees and Crosses (contd.)*

Size *in.* Run	Size *in.* Br.†	Bell Design	Pressure Rating *psi*	Iron Strength *psi* (*1,000's*)	Dimensions—*in.* *T*	*T*₁	*H*	*J*	*S*	Weight—*lb* Tee All Bell	Tee *B, S & B*	Cross All Bell	Cross *B, S, B & B*
30	8	II	250	30	1.37	0.60	18.00	23.00	26.00	2,280	2,070	2,345	2,135
30	8	I	250	DI*	1.03	0.60	18.00	23.00	26.00	1,730	1,640	1,800	1,705
30	10	I	150	30	1.03	0.68	18.00	23.00	26.00	1,750	1,655	1,840	1,750
30	10	II	250	30	1.37	0.68	18.00	23.00	26.00	2,295	2,085	2,380	2,170
30	10	I	250	DI	1.03	0.68	18.00	23.00	26.00	1,750	1,655	1,840	1,750
30	12	I	150	30	1.03	0.75	18.00	23.00	26.00	1,770	1,680	1,885	1,790
30	12	II	250	30	1.37	0.75	18.00	23.00	26.00	2,315	2,105	2,415	2,205
30	12	I	250	DI	1.03	0.75	18.00	23.00	26.00	1,770	1,680	1,885	1,790
30	14	I	150	30	1.03	0.66	18.00	23.00	26.00	1,775	1,685	1,890	1,800
30	14	II	250	30	1.37	0.82	18.00	23.00	26.00	2,335	2,125	2,460	2,250
30	14	I	250	DI	1.03	0.66	18.00	23.00	26.00	1,775	1,685	1,890	1,800
30	16	I	150	30	1.03	0.70	18.00	23.00	26.00	1,805	1,710	1,950	1,860
30	16	II	250	30	1.37	0.89	18.00	23.00	26.00	2,375	2,165	2,540	2,325
30	16	I	250	DI	1.03	0.70	18.00	23.00	26.00	1,805	1,710	1,950	1,860
30	18	I	150	30	1.03	0.75	18.00	23.00	26.00	1,825	1,735	2,000	1,910
30	18	II	250	35	1.37	0.96	18.00	23.00	26.00	2,410	2,200	2,605	2,395
30	18	I	250	DI	1.03	0.75	18.00	23.00	26.00	1,825	1,735	2,000	1,910
30	20	I	150	30	1.03	0.80	18.00	23.00	26.00	1,855	1,765	2,060	1,970
30	20	II	250	35	1.37	1.03	18.00	23.00	26.00	2,450	2,240	2,690	2,480
30	20	I	250	DI	1.03	0.80	18.00	23.00	26.00	1,855	1,765	2,060	1,970
30	24	II	150	35	1.37	1.16	25.00	25.00	33.00	2,860	2,765	3,175	3,085
30	24	I	250	DI	1.03	0.89	25.00	25.00	33.00	2,350	2,260	2,655	2,560
30	30	II	150	35	1.37	1.37	25.00	25.00	33.00	3,050	2,960	3,565	3,470
30	30	I	250	DI	1.03	1.03	25.00	25.00	33.00	2,520	2,430	2,990	2,900
36	8	I	150	30	1.15	0.60	20.00	26.00	28.00	2,540	2,365	2,605	2,430
36	8	II	250	30	1.58	0.60	20.00	26.00	28.00	3,350	3,035	3,410	3,100
36	8	I	250	DI	1.15	0.60	20.00	26.00	28.00	2,540	2,365	2,605	2,430
36	10	I	150	30	1.15	0.68	20.00	26.00	28.00	2,560	2,385	2,650	2,475
36	10	II	250	30	1.58	0.68	20.00	26.00	28.00	3,365	3,050	3,445	3,130
36	10	I	250	DI	1.15	0.68	20.00	26.00	28.00	2,560	2,385	2,650	2,475
36	12	I	150	30	1.15	0.75	20.00	26.00	28.00	2,580	2,405	2,685	2,510
36	12	II	250	30	1.58	0.75	20.00	26.00	28.00	3,380	3,065	3,475	3,160
36	12	I	250	DI	1.15	0.75	20.00	26.00	28.00	2,580	2,405	2,685	2,510
36	14	I	150	30	1.15	0.66	20.00	26.00	28.00	2,580	2,410	2,685	2,510
36	14	II	250	30	1.58	0.82	20.00	26.00	28.00	3,400	3,090	3,515	3,205
36	14	I	250	DI	1.15	0.66	20.00	26.00	28.00	2,580	2,410	2,685	2,510
36	16	I	150	30	1.15	0.70	20.00	26.00	28.00	2,605	2,430	2,745	2,570
36	16	II	250	30	1.58	0.89	20.00	26.00	28.00	3,435	3,120	3,585	3,270
36	16	I	250	DI	1.15	0.70	20.00	26.00	28.00	2,605	2,430	2,745	2,570
36	18	I	150	30	1.15	0.75	20.00	26.00	28.00	2,630	2,455	2,785	2,610
36	18	II	250	30	1.58	0.96	20.00	26.00	28.00	3,465	3,150	3,640	3,330
36	18	I	250	DI	1.15	0.75	20.00	26.00	28.00	2,630	2,455	2,785	2,610
36	20	I	150	30	1.15	0.80	20.00	26.00	28.00	2,655	2,480	2,840	2,665
36	20	II	250	35	1.58	1.03	20.00	26.00	28.00	3,505	3,190	3,720	2,405
36	20	I	250	DI	1.15	0.80	20.00	26.00	28.00	2,655	2,480	2,840	2,665
36	24	I	150	30	1.15	0.89	20.00	26.00	28.00	2,710	2,535	2,945	2,770
36	24	II	250	35	1.58	1.16	20.00	26.00	28.00	3,575	3,220	3,860	3,505
36	24	I	250	DI	1.15	.89	20.00	26.00	28.00	2,710	2,535	2,945	2,770
36	30	II	150	35	1.58	1.37	28.00	28.00	36.00	4,330	4,155	4,765	4,590
36	30	I	250	DI	1.15	1.03	28.00	28.00	36.00	3,495	3,320	3,915	3,745
36	36	II	150	35	1.58	1.58	28.00	28.00	36.00	4,595	4,415	5,285	4,630
36	36	I	250	DI	1.15	1.15	28.00	28.00	36.00	3,720	3,545	4,365	4,190

Dimension details of bells are shown in Table 10.12; those of spigots, Table 10.13.

† Branch.
* Ductile iron.

TABLE 10.3—*Mechanical-Joint Bends (contd.)*

Size *in.*	Pressure Rating *psi*	Iron Strength *psi* (*1,000's*)	Dimensions—*in.* *T*	*A*	*S*	*R*	Weight—*lb* MJ & MJ	MJ & PE
			22½-deg Bends					
2	250	25	0.35	1.5		2.51	13	
2½	250	25	0.35	1.5		2.51	14	
3	250	25	0.48	3.0	11.0	7.56	30	30
4	250	25	0.52	4.0	12.0	10.06	50	45
6	250	25	0.55	5.0	13.0	15.06	75	70
8	250	25	0.60	5.5	13.5	17.62	110	105
10	250	25	0.68	6.5	14.5	22.62	160	160
12	250	25	0.75	7.5	15.5	27.62	220	220
14	150	25	0.66	7.5	15.5	25.12	275	260
14	250	25	0.82	7.5	15.5	25.12	300	285
14	250	DI*	0.66	7.5	15.5	25.12	275	260
16	150	30	0.70	8.0	16.0	27.62	345	325
16	250	30	0.89	8.0	16.0	27.62	385	365
16	250	DI	0.70	8.0	16.0	27.62	345	325
18	150	30	0.75	8.5	16.5	30.19	430	405
18	250	30	0.96	8.5	16.5	30.19	480	455
18	250	DI	0.75	8.5	16.5	30.19	430	405
20	150	30	0.80	9.5	17.5	35.19	535	505
20	250	30	1.03	9.5	17.5	35.19	605	575
20	250	DI	0.80	9.5	17.5	35.19	535	505
24	150	30	0.89	11.0	19.0	37.69	765	725
24	250	30	1.16	11.0	19.0	37.69	880	840
24	250	DI	0.89	11.0	19.0	37.69	765	725
30	150	30	1.03	15.0	23.0	57.81	1,400	1,295
30	250	30	1.37	15.0	23.0	57.81	1,650	1,540
30	250	DI	1.03	15.0	23.0	57.81	1,400	1,295
36	150	30	1.15	18.0	26.0	72.88	2,135	1,970
36	250	30	1.58	18.0	26.0	72.88	2,580	2,410
36	250	DI	1.15	18.0	26.0	72.88	2,135	1,970
42	150	30	1.28	21.0	29.0	88.00	3,020	2,810
42	250	30	1.78	21.0	29.0	88.00	3,720	3,510
42	250	DI	1.28	21.0	29.0	88.00	3,020	2,810
48	150	30	1.42	24.0	32.0	103.06	4,170	3,905
48	250	30	1.96	24.0	32.0	103.06	5,160	4,895
48	250	DI	1.42	24.0	32.0	103.06	4,170	3,905

Dimension details of mechanical-joint bell are shown in Table 10.1: dimension details of plain ends are shown in Table 10.2.
* Ductile iron.

TABLE 10.3—*Mechanical-Joint Bends (contd.)*

Size *in.*	Pressure Rating *psi*	Iron Strength *psi (1,000's)*	Dimensions—*in.*				Weight—*lb*	
			T	*A*	*S*	*R*	MJ & MJ	MJ & PE
11¼-deg Bends								
2	250	25	0.35	1.5		5.08	13	
2½	250	25	0.35	1.5		5.08	14	
3	250	25	0.48	3.0	11.0	15.25	30	30
4	250	25	0.52	4.0	12.0	20.31	50	45
6	250	25	0.55	5.0	13.0	30.50	75	70
8	250	25	0.60	5.5	13.5	35.50	110	105
10	250	25	0.68	6.5	14.5	45.69	160	160
12	250	25	0.75	7.5	15.5	55.81	220	220
14	150	25	0.66	7.5	15.5	50.75	275	260
14	250	25	0.82	7.5	15.5	50.75	305	285
14	250	DI*	0.66	7.5	15.5	50.75	275	260
16	150	30	0.70	8.0	16.0	55.81	345	325
16	250	30	0.89	8.0	16.0	55.81	385	365
16	250	DI	0.70	8.0	16.0	55.81	345	325
18	150	30	0.75	8.5	16.5	60.94	430	405
18	250	30	0.96	8.5	16.5	60.94	480	455
18	250	DI	0.75	8.5	16.5	60.94	430	405
20	150	30	0.80	9.5	17.5	71.06	540	510
20	250	30	1.03	9.5	17.5	71.06	610	575
20	250	DI	0.80	9.5	17.5	71.06	540	510
24	150	30	0.89	11.0	19.0	76.12	770	730
24	250	30	1.16	11.0	19.0	76.12	885	845
24	250	DI	0.89	11.0	19.0	76.12	770	730
30	150	30	1.03	15.0	23.0	116.75	1,410	1,305
30	250	30	1.37	15.0	23.0	116.75	1,655	1,550
30	250	DI	1.03	15.0	23.0	116.75	1,410	1,305
36	150	30	1.15	18.0	26.0	147.25	2,145	1,980
36	250	30	1.58	18.0	26.0	147.25	2,595	2,425
36	250	DI	1.15	18.0	26.0	147.25	2,145	1,980
42	150	30	1.28	21.0	29.0	177.69	3,035	2,825
42	250	30	1.78	21.0	29.0	177.69	3,740	3,535
42	250	DI	1.28	21.0	29.0	177.69	3,035	2,825
48	150	30	1.42	24.0	32.0	208.12	4,190	3,925
48	250	30	1.96	24.0	32.0	208.12	5,195	4,925
48	250	DI	1.42	24.0	32.0	208.12	4,190	3,925

Dimension details of mechanical-joint bell are shown in Table 10.1; dimension details of plain ends are shown in Table 10.2.
* Ductile iron.

TABLE 10.15—*Bell-and-Spigot Tees and Crosses (contd.)*

Size *in.*		Bell Design	Pressure Rating *psi*	Iron Strength *psi (1,000's)*	Dimensions—*in.*					Weight—*lb*			
										Tee		Cross	
Run	Br.†				*T*	T_1	*H*	*J*	*S*	All Bell	*B, S* & *B*	All Bell	*B, S, B* & *B*
20	6	I	150	30	0.80	0.55	14.00	17.00	22.00	770	725	820	770
20	6	II	250	30	1.03	0.55	14.00	17.00	22.00	935	860	985	910
20	6	I	250	DI*	0.80	0.55	14.00	17.00	22.00	770	725	820	770
20	8	I	150	30	0.80	0.60	14.00	17.00	22.00	785	740	860	815
20	8	II	250	30	1.03	0.60	14.00	17.00	22.00	955	880	1,020	945
20	8	I	250	DI	0.80	0.60	14.00	17.00	22.00	785	740	860	815
20	10	I	150	30	0.80	0.68	14.00	17.00	22.00	810	765	895	850
20	10	II	250	30	1.03	0.68	14.00	17.00	22.00	975	895	1,060	980
20	10	I	250	DI	0.80	0.68	14.00	17.00	22.00	810	765	895	850
20	12	I	150	30	0.80	0.75	14.00	17.00	22.00	835	790	945	900
20	12	II	250	30	1.03	0.75	14.00	17.00	22.00	995	920	1,100	1,020
20	12	I	250	DI	0.80	0.75	14.00	17.00	22.00	835	790	945	900
20	14	I	150	30	0.80	0.66	14.00	17.00	22.00	840	790	955	910
20	14	II	250	35	1.03	0.82	14.00	17.00	22.00	1,020	940	1,150	1,070
20	14	I	250	DI	0.80	0.66	14.00	17.00	22.00	840	790	955	910
20	16	I	150	30	0.80	0.70	18.00	18.00	26.00	995	950	1,155	1,110
20	16	II	250	35	1.03	0.89	18.00	18.00	26.00	1,215	1,140	1,400	1,320
20	16	I	250	DI	0.80	0.70	18.00	18.00	26.00	995	950	1,155	1,110
20	18	II	150	35	1.03	0.96	18.00	18.00	26.00	1,270	1,195	1,495	1,415
20	18	I	250	DI	0.80	0.75	18.00	18.00	26.00	1,025	980	1,215	1,170
20	20	II	150	35	1.03	1.03	18.00	18.00	26.00	1,325	1,250	1,600	1,525
20	20	I	250	DI	0.80	0.80	18.00	18.00	26.00	1,065	1,015	1,290	1,245
24	6	I	150	30	0.89	0.55	15.00	19.00	23.00	1,025	975	1,080	1,025
24	6	II	250	30	1.16	0.55	15.00	19.00	23.00	1,285	1,185	1,330	1,230
24	6	I	250	DI	0.89	0.55	15.00	19.00	23.00	1,025	975	1,080	1,025
24	8	I	150	30	0.89	0.60	15.00	19.00	23.00	1,050	995	1,110	1,060
24	8	II	250	30	1.16	0.60	15.00	19.00	23.00	1,300	1,200	1,365	1,265
24	8	I	250	DI	0.89	0.60	15.00	19.00	23.00	1,050	995	1,110	1,060
24	10	I	150	30	0.89	0.68	15.00	19.00	23.00	1,070	1,020	1,160	1,105
24	10	II	250	30	1.16	0.68	15.00	19.00	23.00	1,320	1,220	1,400	1,300
24	10	I	250	DI	0.89	0.68	15.00	19.00	23.00	1,070	1,020	1,160	1,105
24	12	I	150	30	0.89	0.75	15.00	19.00	23.00	1,085	1,030	1,190	1,140
24	12	II	250	30	1.16	0.75	15.00	19.00	23.00	1,335	1,235	1,435	1,335
24	12	I	250	DI	0.89	0.75	15.00	19.00	23.00	1,085	1,030	1,190	1,140
24	14	I	150	30	0.89	0.66	15.00	19.00	23.00	1,095	1,040	1,205	1,150
24	14	II	250	30	1.16	0.82	15.00	19.00	23.00	1,360	1,260	1,485	1,380
24	14	I	250	DI	0.89	0.66	15.00	19.00	23.00	1,095	1,040	1,205	1,150
24	16	I	150	30	0.89	0.70	15.00	19.00	23.00	1,120	1,070	1,265	1,210
24	16	II	250	35	1.16	0.89	15.00	19.00	23.00	1,400	1,295	1,555	1,455
24	16	I	250	DI	0.89	0.70	15.00	19.00	23.00	1,120	1,070	1,265	1,210
24	18	I	150	30	0.89	0.75	22.00	22.00	30.00	1,445	1,395	1,650	1,600
24	18	II	250	35	1.16	0.96	22.00	22.00	30.00	1,820	1,715	2,060	1,960
24	18	I	250	DI	0.89	0.75	22.00	22.00	30.00	1,445	1,395	1,650	1,600
24	20	II	150	35	1.16	1.03	22.00	22.00	30.00	1,890	1,790	2,185	2,080
24	20	I	250	DI	0.89	0.80	22.00	22.00	30.00	1,485	1,430	1,725	1,675
24	24	II	150	35	1.16	1.16	22.00	22.00	30.00	2,005	1,900	2,405	2,305
24	24	I	250	DI	0.89	0.89	22.00	22.00	30.00	1,565	1,510	1,890	1,835
30	6	I	150	30	1.03	0.55	18.00	23.00	26.00	1,710	1,615	1,760	1,670
30	6	II	250	30	1.37	0.55	18.00	23.00	26.00	2,260	2,050	2,310	2,100
30	6	I	250	DI	1.03	0.55	18.00	23.00	26.00	1,710	1,615	1,760	1,670
30	8	I	150	30	1.03	0.60	18.00	23.00	26.00	1,730	1,640	1,800	1,705

Dimension details of bells are shown in Table 10.12; those of spigots, Table 10.13.
† Branch.
* Ductile iron.

TABLE 10.15—*Bell-and-Spigot Tees and Crosses (contd.)*

Size *in.*		Bell Design	Pressure Rating *psi*	Iron Strength *psi* (*1,000's*)	Dimensions—*in.*					Weight—*lb*			
										Tee		Cross	
Run	Br.†				*T*	T_1	*H*	*J*	*S*	All Bell	*B, S* & *B*	All Bell	*B, S, B* & *B*
14	8	II	250	25	0.82	0.60	14.00	14.00	22.00	550	520	620	590
14	8	I	250	DI*	0.66	0.60	14.00	14.00	22.00	485	465	555	530
14	10	I	150	25	0.66	0.68	14.00	14.00	22.00	505	480	600	580
14	10	II	250	25	0.82	0.68	14.00	14.00	22.00	570	540	660	630
14	10	I	250	DI	0.66	0.68	14.00	14.00	22.00	505	480	600	580
14	12	II	150	25	0.82	0.75	14.00	14.00	22.00	600	570	710	680
14	12	II	250	30	0.82	0.75	14.00	14.00	22.00	600	570	710	680
14	12	I	250	DI	0.66	0.75	14.00	14.00	22.00	530	505	650	625
14	14	II	150	25	0.82	0.82	14.00	14.00	22.00	630	600	775	745
14	14	II	250	30	0.82	0.82	14.00	14.00	22.00	630	600	775	745
14	14	I	250	DI	0.66	0.66	14.00	14.00	22.00	545	520	675	650
16	6	I	150	30	0.70	0.55	15.00	15.00	23.00	590	550	635	600
16	6	II	250	30	0.89	0.55	15.00	15.00	23.00	685	635	735	685
16	6	I	250	DI	0.70	0.55	15.00	15.00	23.00	590	550	635	600
16	8	I	150	30	0.70	0.60	15.00	15.00	23.00	605	570	680	640
16	8	II	250	30	0.89	0.60	15.00	15.00	23.00	705	655	770	725
16	8	I	250	DI	0.70	0.60	15.00	15.00	23.00	605	570	680	640
16	10	I	150	30	0.70	0.68	15.00	15.00	23.00	625	590	725	690
16	10	II	250	30	0.89	0.68	15.00	15.00	23.00	725	675	815	765
16	10	I	250	DI	0.70	0.68	15.00	15.00	23.00	625	590	725	690
16	12	I	150	30	0.70	0.75	15.00	15.00	23.00	650	615	770	735
16	12	II	250	30	0.89	0.75	15.00	15.00	23.00	745	695	855	805
16	12	I	250	DI	0.70	0.75	15.00	15.00	23.00	650	615	770	735
16	14	II	150	30	0.89	0.82	15.00	15.00	23.00	780	735	920	870
16	14	II	250	35	0.89	0.82	15.00	15.00	23.00	780	735	920	870
16	14	I	250	DI	0.70	0.66	15.00	15.00	23.00	665	625	785	750
16	16	II	150	30	0.89	0.89	15.00	15.00	23.00	830	780	1,010	965
16	16	II	250	35	0.89	0.89	15.00	15.00	23.00	830	780	1,010	965
16	16	I	250	DI	0.70	0.70	15.00	15.00	23.00	695	660	860	820
18	6	I	150	30	0.75	0.55	13.00	15.50	21.00	655	595	685	640
18	6	II	250	30	0.96	0.55	13.00	15.50	21.00	755	695	800	745
18	6	I	250	DI	0.75	0.55	13.00	15.50	21.00	635	595	685	640
18	8	I	150	30	0.75	0.60	13.00	15.50	21.00	655	615	725	685
18	8	II	250	30	0.96	0.60	13.00	15.50	21.00	770	715	835	780
18	8	I	250	DI	0.75	0.60	13.00	15.50	21.00	655	615	725	685
18	10	I	150	30	0.75	0.68	13.00	15.50	21.00	675	635	760	720
18	10	II	250	30	0.96	0.68	13.00	15.50	21.00	790	730	875	815
18	10	I	250	DI	0.75	0.68	13.00	15.50	21.00	675	635	760	720
18	12	I	150	30	0.75	0.75	13.00	15.50	21.00	700	650	810	770
18	12	II	250	30	0.96	0.75	13.00	15.50	21.00	810	750	915	855
18	12	I	250	DI	0.75	0.75	13.00	15.50	21.00	700	650	810	770
18	14	I	150	30	0.75	0.66	16.50	16.50	24.50	800	755	920	880
18	14	II	250	30	0.96	0.82	16.50	16.50	24.50	950	895	1,090	1,035
18	14	I	250	DI	0.75	0.66	16.50	16.50	24.50	800	755	920	880
18	16	II	150	30	0.96	0.89	16.50	16.50	24.50	1,005	945	1,190	1,130
18	16	II	250	35	0.96	0.89	16.50	16.50	24.50	1,005	945	1,190	1,130
18	16	I	250	DI	0.75	0.70	16.50	16.50	24.50	830	790	995	950
18	18	II	150	30	0.96	0.96	16.50	16.50	24.50	1,050	990	1,275	1,215
18	18	II	250	35	0.96	0.96	16.50	16.50	24.50	1,050	990	1,275	1,215
18	18	I	250	DI	0.75	0.75	16.50	16.50	24.50	865	825	1,055	1,015

Dimension details of bells are shown in Table 10.12; those of spigots, Table 10.13.

† Branch.
* Ductile iron.

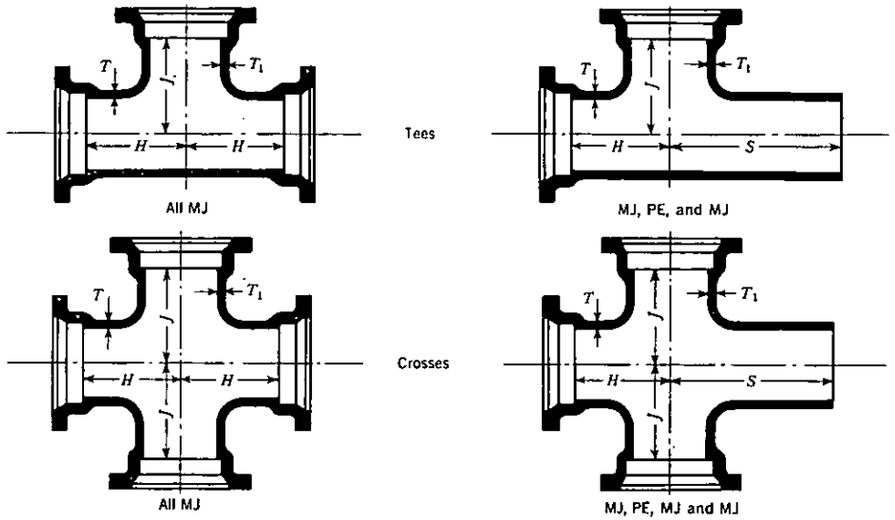

Fig. 10.4. Mechanical-Joint Tees and Crosses (See Table 10.4)

TABLE 10.4

Mechanical-Joint Tees and Crosses

Size *in.*		Pressure Rating *psi*	Iron Strength *psi* (*1,000's*)	Dimensions—*in.*					Weight—*lb*			
									Tee		Cross	
Run	Branch			*T*	T_1	*H*	*J*	*S*	All MJ	MJ, PE & MJ	All MJ	MJ, PE, MJ & MJ
2	2	250	25	0.35	0.35	3.25	3.25		22		28	
2¼	2	250	25	0.35	0.35	3.25	3.25		23		30	
2¼	2¼	250	25	0.35	0.35	3.25	3.25		24		31	
3	2	250	25	0.48	0.35	4.0	4.0	12.0	39	39	46	46
3	2¼	250	25	0.48	0.35	4.0	4.0	12.0	40	40	47	47
3	3	250	25	0.48	0.48	5.5	5.5	13.5	55	55	70	70
4	2	250	25	0.52	0.35	4.8	4.8	12.8	57	52	63	58
4	2¼	250	25	0.52	0.35	4.8	4.8	12.8	58	53	64	59
4	3	250	25	0.52	0.48	6.5	6.5	14.5	75	70	90	85
4	4	250	25	0.52	0.52	6.5	6.5	14.5	80	75	105	100
6	2	250	25	0.55	0.35	5.2	5.2	13.2	83	78	89	84
6	2¼	250	25	0.55	0.35	5.2	5.2	13.2	84	79	90	85
6	3	250	25	0.55	0.48	8.0	8.0	16.0	110	105	125	120
6	4	250	25	0.55	0.52	8.0	8.0	16.0	115	110	140	135
6	6	250	25	0.55	0.55	8.0	8.0	16.0	125	120	160	155

Dimension details of mechanical-joint bell are shown in Table 10.1; dimension details of plain ends are shown in Table 10.2.

TABLE 10.4—*Mechanical-Joint Tees and Crosses (contd.)*

Size *in.*		Pressure Rating *psi*	Iron Strength *psi* (*1,000's*)	Dimensions—*in.*					Weight—*lb*			
									Tee		Cross	
Run	Branch			T	T_1	H	J	S	All MJ	MJ, PE & MJ	All MJ	MJ, PE, MJ & MJ
8	4	250	25	0.60	0.52	9.0	9.0	17.0	165	160	185	180
8	6	250	25	0.60	0.55	9.0	9.0	17.0	175	170	205	200
8	8	250	25	0.60	0.60	9.0	9.0	17.0	185	180	235	230
10	4	250	25	0.68	0.52	11.0	11.0	19.0	235	235	260	260
10	6	250	25	0.68	0.55	11.0	11.0	19.0	250	250	285	285
10	8	250	25	0.68	0.60	11.0	11.0	19.0	260	260	310	310
10	10	250	25	0.80	0.80	11.0	11.0	19.0	310	310	380	380
12	4	250	25	0.75	0.52	12.0	12.0	20.0	315	315	340	340
12	6	250	25	0.75	0.55	12.0	12.0	20.0	325	325	360	360
12	8	250	25	0.75	0.60	12.0	12.0	20.0	340	340	385	385
12	10	250	25	0.87	0.80	12.0	12.0	20.0	390	390	460	460
12	12	250	25	0.87	0.87	12.0	12.0	20.0	410	410	495	495
14	6	150	25	0.66	0.55	14.0	14.0	22.0	435	420	475	460
14	6	250	25	0.82	0.55	14.0	14.0	22.0	485	470	525	505
14	6	250	DI*	0.66	0.55	14.0	14.0	22.0	435	420	475	460
14	8	150	25	0.66	0.60	14.0	14.0	22.0	450	435	500	485
14	8	250	25	0.82	0.60	14.0	14.0	22.0	500	480	550	535
14	8	250	DI	0.66	0.60	14.0	14.0	22.0	450	435	500	485
14	10	150	25	0.66	0.68	14.0	14.0	22.0	465	450	540	525
14	10	250	25	0.82	0.68	14.0	14.0	22.0	515	500	585	570
14	10	250	DI	0.66	0.68	14.0	14.0	22.0	465	450	540	525
14	12	150	25	0.82	0.75	14.0	14.0	22.0	540	525	630	615
14	12	250	30	0.82	0.75	14.0	14.0	22.0	540	525	630	615
14	12	250	DI	0.66	0.75	14.0	14.0	22.0	495	475	585	570
14	14	150	25	0.82	0.82	14.0	14.0	22.0	585	570	710	695
14	14	250	30	0.82	0.82	14.0	14.0	22.0	585	570	710	695
14	14	250	DI	0.66	0.66	14.0	14.0	22.0	520	500	635	620
16	6	150	30	0.70	0.55	15.0	15.0	23.0	540	520	575	555
16	6	250	30	0.89	0.55	15.0	15.0	23.0	615	590	650	630
16	6	250	DI	0.70	0.55	15.0	15.0	23.0	540	520	575	555
16	8	150	30	0.70	0.60	15.0	15.0	23.0	550	530	605	585
16	8	250	30	0.89	0.60	15.0	15.0	23.0	625	605	675	655
16	8	250	DI	0.70	0.60	15.0	15.0	23.0	550	530	605	585
16	10	150	30	0.70	0.68	15.0	15.0	23.0	570	550	645	625
16	10	250	30	0.89	0.68	15.0	15.0	23.0	645	620	710	690
16	10	250	DI	0.70	0.68	15.0	15.0	23.0	570	550	645	625
16	12	150	30	0.70	0.75	15.0	15.0	23.0	590	570	685	665
16	12	250	30	0.89	0.75	15.0	15.0	23.0	660	640	745	725
16	12	250	DI	0.70	0.75	15.0	15.0	23.0	590	570	685	665
16	14	150	30	0.89	0.82	15.0	15.0	23.0	710	690	830	810
16	14	250	35	0.89	0.82	15.0	15.0	23.0	710	690	830	810
16	14	250	DI	0.70	0.66	15.0	15.0	23.0	620	600	735	715
16	16	150	30	0.89	0.89	15.0	15.0	23.0	740	720	895	875
16	16	250	35	0.89	0.89	15.0	15.0	23.0	740	720	895	875
16	16	250	DI	0.70	0.70	15.0	15.0	23.0	650	625	790	770

Dimension details of mechanical-joint bell are shown in Table 10.1; dimension details of plain ends, are shown in Table 10.2.
* Ductile Iron.

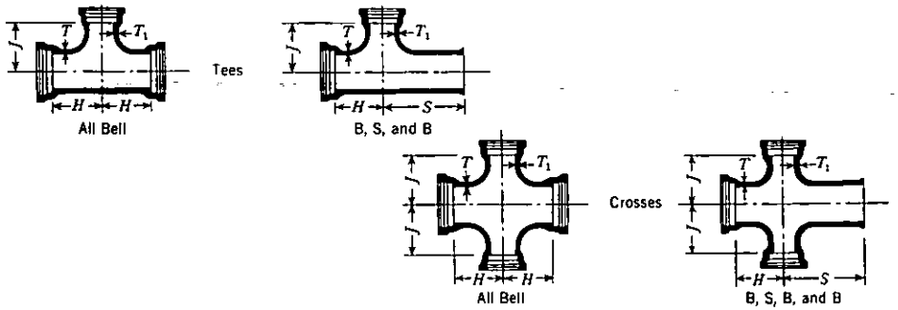

Fig. 10.15. Bell-and-Spigot Tees and Crosses (See Table 10.15)

TABLE 10.15

Bell-and-Spigot Tees and Crosses

Size *in.*		Bell Design	Pressure Rating *psi*	Iron Strength *psi* (*1,000's*)	Dimensions—*in.*					Weight—*lb*			
										Tee		Cross	
Run	Br.†				T	T_1	H	J	S	All Bell	*B, S* & *B*	All Bell	*B, S, B* & *B*
3	3		250	25	0.48	0.48	5.50	5.50	13.50	80	70	105	95
4	3		250	25	0.52	0.48	6.50	6.50	14.50	100	90	125	115
4	4		250	25	0.52	0.52	6.50	6.50	14.50	105	95	140	130
6	3		250	25	0.55	0.48	8.00	8.00	16.00	140	125	165	150
6	4		250	25	0.55	0.52	8.00	8.00	16.00	150	135	180	165
6	6		250	25	0.55	0.55	8.00	8.00	16.00	160	145	210	195
8	4		250	25	0.60	0.52	9.00	9.00	17.00	210	195	240	225
8	6		250	25	0.60	0.55	9.00	9.00	17.00	220	205	265	250
8	8		250	25	0.60	0.60	9.00	9.00	17.00	240	225	305	290
10	4		250	25	0.68	0.52	11.00	11.00	19.00	290	270	320	300
10	6		250	25	0.68	0.55	11.00	11.00	19.00	300	280	350	330
10	8		250	25	0.68	0.60	11.00	11.00	19.00	320	300	390	370
10	10		250	25	0.80	0.80	11.00	11.00	19.00	370	350	465	445
12	4		250	25	0.75	0.52	12.00	12.00	20.00	375	355	405	385
12	6		250	25	0.75	0.55	12.00	12.00	20.00	385	365	435	415
12	8		250	25	0.75	0.60	12.00	12.00	20.00	405	385	475	455
12	10		250	25	0.87	0.80	12.00	12.00	20.00	460	440	555	535
12	12		250	25	0.87	0.87	12.00	12.00	20.00	485	465	600	580
14	6	I	150	25	0.66	0.55	14.00	14.00	22.00	465	440	520	495
14	6	II	250	25	0.82	0.55	14.00	14.00	22.00	530	500	580	550
14	6	I	250	DI*	0.66	0.55	14.00	14.00	22.00	465	440	520	495
14	8	I	150	25	0.66	0.60	14.00	14.00	22.00	485	465	555	530

Dimension details of bells are shown in Table 10.12; those of spigots, Table 10.13.

† Branch.
* Ductile iron.

TABLE 10.14—*Bell-and-Spigot Bends (contd.)*

Size *in.*	Bell Design	Pressure Rating *psi*	Iron Strength *psi* (*1,000's*)	Dimensions—*in.*				Weight—*lb*	
				T	*A*	*S*	*R*	*B & B*	*B & S*
11¼-deg Bends									
3		250	25	0.48	3.0	11.0	15.25	50	40
4		250	25	0.52	4.0	12.0	20.31	65	55
6		250	25	0.55	5.0	13.0	30.50	100	85
8		250	25	0.60	5.5	13.5	35.50	145	130
10		250	25	0.68	6.5	14.5	45.69	200	180
12		250	25	0.75	7.5	15.5	55.81	270	250
14	I	150	25	0.66	7.5	15.5	50.75	295	270
14	II	250	25	0.82	7.5	15.5	50.75	335	305
14	I	250	DI*	0.66	7.5	15.5	50.75	295	270
16	I	150	30	0.70	8.0	16.0	55.81	380	345
16	II	250	30	0.89	8.0	16.0	55.81	440	395
16	I	250	DI	0.70	8.0	16.0	55.81	380	345
18	I	150	30	0.75	8.5	16.5	60.94	460	425
18	II	250	30	0.96	8.5	16.5	60.94	550	490
18	I	250	DI	0.75	8.5	16.5	60.94	460	425
20	I	150	30	0.80	9.5	17.5	71.06	570	530
20	II	250	30	1.03	9.5	17.5	71.06	700	625
20	I	250	DI	0.80	9.5	17.5	71.06	570	530
24	I	150	30	0.89	11.0	19.0	76.12	800	745
24	II	250	30	1.16	11.0	19.0	76.12	1,005	905
24	I	250	DI	0.89	11.0	19.0	76.12	800	745
30	I	150	30	1.03	15.0	23.0	116.75	1,375	1,290
30	II	250	30	1.37	15.0	23.0	116.75	1,840	1,645
30	I	250	DI	1.03	15.0	23.0	116.75	1,375	1,290
36	I	150	30	1.15	18.0	26.0	147.25	2,145	1,985
36	II	250	30	1.58	18.0	26.0	147.25	2,850	2,560
36	I	250	DI	1.15	18.0	26.0	147.25	2,145	1,985
42	I	150	30	1.28	21.0	29.0	177.69	3,065	2,850
42	II	250	30	1.78	21.0	29.0	177.69	4,175	3,755
42	I	250	DI	1.28	21.0	29.0	177.69	3,065	2,850
48	I	150	30	1.42	24.0	32.0	208.12	4,230	3,950
48	II	250	30	1.96	24.0	32.0	208.12	5,790	5,230
48	I	250	DI	1.42	24.0	32.0	208.12	4,230	3,950

Dimension details of bells are shown in Table 10.12; those of spigots, Table 10.13.
* Ductile iron.

TABLE 10.4—*Mechanical-Joint Tees and Crosses (contd.)*

Size *in.*		Pressure Rating *psi*	Iron Strength *psi* (*1,000's*)	Dimensions—*in.*					Weight—*lb*			
									Tee		Cross	
Run	Branch			*T*	T_1	*H*	*J*	*S*	All MJ	MJ, PE & MJ	All MJ	MJ, PE MJ & MJ
18	6	150	30	0.75	0.55	13.0	15.5	21.0	590	565	625	600
18	6	250	30	0.96	0.55	13.0	15.5	21.0	670	645	705	680
18	6	250	DI*	0.75	0.55	13.0	15.5	21.0	590	565	625	600
18	8	150	30	0.75	0.60	13.0	15.5	21.0	605	580	655	630
18	8	250	30	0.96	0.60	13.0	15.5	21.0	685	655	730	705
18	8	250	DI	0.75	0.60	13.0	15.5	21.0	605	580	655	630
18	10	150	30	0.75	0.68	13.0	15.5	21.0	620	595	685	660
18	10	250	30	0.96	0.68	13.0	15.5	21.0	700	670	760	735
18	10	250	DI	0.75	0.68	13.0	15.5	21.0	620	595	685	660
18	12	150	30	0.75	0.75	13.0	15.5	21.0	640	615	725	700
18	12	250	30	0.96	0.75	13.0	15.5	21.0	715	690	790	765
18	12	250	DI	0.75	0.75	13.0	15.5	21.0	640	615	725	700
18	14	150	30	0.75	0.66	16.5	16.5	24.5	755	730	870	845
18	14	250	30	0.96	0.82	16.5	16.5	24.5	865	840	990	965
18	14	250	DI	0.75	0.66	16.5	16.5	24.5	755	730	870	845
18	16	150	30	0.96	0.89	16.5	16.5	24.5	905	880	1,060	1,035
18	16	250	35	0.96	0.89	16.5	16.5	24.5	905	880	1,060	1,035
18	16	250	DI	0.75	0.70	16.5	16.5	24.5	785	760	930	905
18	18	150	30	0.96	0.96	16.5	16.5	24.5	945	920	1,130	1,105
18	18	250	35	0.96	0.96	16.5	16.5	24.5	945	920	1,130	1,105
18	18	250	DI	0.75	0.75	16.5	16.5	24.5	820	795	995	965
20	6	150	30	0.80	0.55	14.0	17.0	22.0	725	695	760	730
20	6	250	30	1.03	0.55	14.0	17.0	22.0	830	800	865	835
20	6	250	DI	0.80	0.55	14.0	17.0	22.0	725	695	760	730
20	8	150	30	0.80	0.60	14.0	17.0	22.0	735	705	790	760
20	8	250	30	1.03	0.60	14.0	17.0	22.0	845	810	890	860
20	8	250	DI	0.80	0.60	14.0	17.0	22.0	735	705	790	760
20	10	150	30	0.80	0.68	14.0	17.0	22.0	755	725	820	790
20	10	250	30	1.03	0.68	14.0	17.0	22.0	860	825	920	890
20	10	250	DI	0.80	0.68	14.0	17.0	22.0	755	725	820	790
20	12	150	30	0.80	0.75	14.0	17.0	22.0	775	745	860	830
20	12	250	30	1.03	0.75	14.0	17.0	22.0	875	840	955	920
20	12	250	DI	0.80	0.75	14.0	17.0	22.0	775	745	860	830
20	14	150	30	0.80	0.66	14.0	17.0	22.0	795	765	905	875
20	14	250	35	1.03	0.82	14.0	17.0	22.0	910	875	1,025	990
20	14	250	DI	0.80	0.66	14.0	17.0	22.0	795	765	905	875
20	16	150	30	0.80	0.70	18.0	18.0	26.0	945	915	1,085	1,055
20	16	250	35	1.03	0.89	18.0	18.0	26.0	1,095	1,060	1,245	1,215
20	16	250	DI	0.80	0.70	18.0	18.0	26.0	945	915	1,085	1,055
20	18	150	35	1.03	0.96	18.0	18.0	26.0	1,140	1,110	1,330	1,300
20	18	250	DI	0.80	0.75	18.0	18.0	26.0	985	950	1,155	1,120
20	20	150	35	1.03	1.03	18.0	18.0	26.0	1,185	1,155	1,415	1,385
20	20	250	DI	0.80	0.80	18.0	18.0	26.0	1,020	990	1,230	1,200
24	6	150	30	0.89	0.55	15.0	19.0	23.0	985	945	1,025	985
24	6	250	30	1.16	0.55	15.0	19.0	23.0	1,145	1,105	1,180	1,140
24	6	250	DI	0.89	0.55	15.0	19.0	23.0	985	945	1,025	985
24	8	150	30	0.89	0.60	15.0	19.0	23.0	1,000	960	1,045	1,005
24	8	250	30	1.16	0.60	15.0	19.0	23.0	1,160	1,115	1,200	1,160

Dimension details of mechanical-joint bell are shown in Table 10.1; dimension details of plain ends are shown in Table 10.2.
* Ductile iron.

TABLE 10.4—*Mechanical-Joint Tees and Crosses (contd.)*

Size *in.*		Pressure Rating *psi*	Iron Strength *psi* (*1,000's*)	Dimensions—*in.*					Weight—*lb*			
									Tee		Cross	
Run	Branch			*T*	T_1	*H*	*J*	*S*	All MJ	MJ, PE & MJ	All MJ	MJ, PE, MJ & MJ
24	8	250	DI*	0.89	0.60	15.0	19.0	23.0	1,000	960	1,045	1,005
24	10	150	30	0.89	0.68	15.0	19.0	23.0	1,020	980	1,085	1,045
24	10	250	30	1.16	0.68	15.0	19.0	23.0	1,170	1,130	1,230	1,190
24	10	250	DI	0.89	0.68	15.0	19.0	23.0	1,020	980	1,085	1,045
24	12	150	30	0.89	0.75	15.0	19.0	23.0	1,030	990	1,110	1,070
24	12	250	30	1.16	0.75	15.0	19.0	23.0	1,185	1,145	1,260	1,220
24	12	250	DI	0.89	0.75	15.0	19.0	23.0	1,030	990	1,110	1,070
24	14	150	30	0.89	0.66	15.0	19.0	23.0	1,055	1,015	1,155	1,115
24	14	250	30	1.16	0.82	15.0	19.0	23.0	1,220	1,180	1,325	1,285
24	14	250	DI	0.89	0.66	15.0	19.0	23.0	1,055	1,015	1,155	1,115
24	16	150	30	0.89	0.70	15.0	19.0	23.0	1,075	1,035	1,200	1,160
24	16	250	35	1.16	0.89	15.0	19.0	23.0	1,245	1,200	1,375	1,335
24	16	250	DI	0.89	0.70	15.0	19.0	23.0	1,075	1,035	1,200	1,160
24	18	150	30	0.89	0.75	22.0	22.0	30.0	1,400	1,360	1,590	1,550
24	18	250	35	1.16	0.96	22.0	22.0	30.0	1,660	1,615	1,865	1,820
24	18	250	DI	0.89	0.75	22.0	22.0	30.0	1,400	1,360	1,590	1,550
24	20	150	35	1.16	1.03	22.0	22.0	30.0	1,720	1,680	1,965	1,925
24	20	250	DI	0.89	0.80	22.0	22.0	30.0	1,450	1,410	1,675	1,630
24	24	150	35	1.16	1.16	22.0	22.0	30.0	1,815	1,775	2,155	2,115
24	24	250	DI	0.89	0.89	22.0	22.0	30.0	1,535	1,490	1,835	1,795
30	6	150	30	1.03	0.55	18.0	23.0	26.0	1,730	1,615	1,770	1,655
30	6	250	30	1.37	0.55	18.0	23.0	26.0	2,050	1,935	2,085	1,970
30	6	250	DI	1.03	0.55	18.0	23.0	26.0	1,730	1,615	1,770	1,655
30	8	150	30	1.03	0.60	18.0	23.0	26.0	1,745	1,630	1,795	1,680
30	8	250	30	1.37	0.60	18.0	23.0	26.0	2,060	1,945	2,110	1,990
30	8	250	DI	1.03	0.60	18.0	23.0	26.0	1,745	1,630	1,795	1,680
30	10	150	30	1.03	0.68	18.0	23.0	26.0	1,760	1,645	1,830	1,715
30	10	250	30	1.37	0.68	18.0	23.0	26.0	2,075	1,960	2,135	2,020
30	10	250	DI	1.03	0.68	18.0	23.0	26.0	1,760	1,645	1,830	1,715
30	12	150	30	1.03	0.75	18.0	23.0	26.0	1,780	1,665	1,865	1,750
30	12	250	30	1.37	0.75	18.0	23.0	26.0	2,090	1,970	2,165	2,045
30	12	250	DI	1.03	0.75	18.0	23.0	26.0	1,780	1,665	1,865	1,750
30	14	150	30	1.03	0.66	18.0	23.0	26.0	1,800	1,685	1,905	1,790
30	14	250	30	1.37	0.82	18.0	23.0	26.0	2,120	2,005	2,230	2,115
30	14	250	DI	1.03	0.66	18.0	23.0	26.0	1,800	1,685	1,905	1,790
30	16	150	30	1.03	0.70	18.0	23.0	26.0	1,820	1,705	1,950	1,835
30	16	250	30	1.37	0.89	18.0	23.0	26.0	2,145	2,030	2,280	2,165
30	16	250	DI	1.03	0.70	18.0	23.0	26.0	1,820	1,705	1,950	1,835
30	18	150	30	1.03	0.75	18.0	23.0	26.0	1,845	1,730	2,000	1,885
30	18	250	35	1.37	0.96	18.0	23.0	26.0	2,170	2,055	2,330	2,215
30	18	250	DI	1.03	0.75	18.0	23.0	26.0	1,845	1,730	2,000	1,885
30	20	150	30	1.03	0.80	18.0	23.0	26.0	1,875	1,760	2,060	1,945
30	20	250	35	1.37	1.03	18.0	23.0	26.0	2,205	2,090	2,395	2,280
30	20	250	DI	1.03	0.80	18.0	23.0	26.0	1,875	1,760	2,060	1,945
30	24	150	35	1.37	1.16	25.0	25.0	33.0	2,880	2,765	3,180	3,065
30	24	250	DI	1.03	0.89	25.0	25.0	33.0	2,400	2,280	2,675	2,560
30	30	150	35	1.37	1.37	25.0	25.0	33.0	3,105	2,990	3,640	3,520
30	30	250	DI	1.03	1.03	25.0	25.0	33.0	2,595	2,480	3,075	2,955

Dimension details of mechanical-joint bell are shown in Table 10.1; dimension details of plain ends are shown in Table 10.2.
* Ductile iron.

TABLE 10.14—*Bell-and-Spigot Bends (contd.)*

Size *in.*	Bell Design	Pressure Rating *psi*	Iron Strength *psi* (*1,000's*)	Dimensions—*in.*				Weight—*lb*	
				T	*A*	*S*	*R*	*B & B*	*B & S*
				22½-deg Bends					
3		250	25	0.48	3.0	11.0	7.56	50	40
4		250	25	0.52	4.0	12.0	10.06	65	55
6		250	25	0.55	5.0	13.0	15.06	100	85
8		250	25	0.60	5.5	13.5	17.62	145	130
10		250	25	0.68	6.5	14.5	22.62	200	180
12		250	25	0.75	7.5	15.5	27.62	270	250
14	I	150	25	0.66	7.5	15.5	25.12	295	270
14	II	250	25	0.82	7.5	15.5	25.12	330	305
14	I	250	DI*	0.66	7.5	15.5	25.12	295	270
16	I	150	30	0.70	8.0	16.0	27.62	380	345
16	II	250	30	0.89	8.0	16.0	27.62	440	395
16	I	250	DI	0.70	8.0	16.0	27.62	380	345
18	I	150	30	0.75	8.5	16.5	30.19	460	425
18	II	250	30	0.96	8.5	16.5	30.19	545	490
18	I	250	DI	0.75	8.5	16.5	30.19	460	425
20	I	150	30	0.80	9.5	17.5	35.19	565	525
20	II	250	30	1.03	9.5	17.5	35.19	695	620
20	I	250	DI	0.80	9.5	17.5	35.19	565	525
24	I	150	30	0.89	11.0	19.0	37.69	795	740
24	II	250	30	1.16	11.0	19.0	37.69	1,000	905
24	I	250	DI	0.89	11.0	19.0	37.69	795	740
30	I	150	30	1.03	15.0	23.0	57.81	1,365	1,280
30	II	250	30	1.37	15.0	23.0	57.81	1,835	1,640
30	I	250	DI	1.03	15.0	23.0	57.81	1,365	1,280
36	I	150	30	1.15	18.0	26.0	72.88	2,135	1,975
36	II	250	30	1.58	18.0	26.0	72.88	2,835	2,545
36	I	250	DI	1.15	18.0	26.0	72.88	2,135	1,975
42	I	150	30	1.28	21.0	29.0	88.00	3,050	2,835
42	II	250	30	1.78	21.0	29.0	88.00	4,155	3,735
42	I	250	DI	1.28	21.0	29.0	88.00	3,050	2,835
48	I	150	30	1.42	24.0	32.0	103.06	4,210	3,930
48	II	250	30	1.96	24.0	32.0	103.06	5,760	5,200
48	I	250	DI	1.42	24.0	32.0	103.06	4,210	3,930

Dimension details of bells are shown in Table 10.12; those of spigots, Table 10.13.
* Ductile iron.

TABLE 10.14—*Bell-and-Spigot Bends (contd.)*

Size *in.*	Bell Design	Pressure Rating *psi*	Iron Strength *psi* (*1,000's*)	Dimensions—*in.*				Weight—*lb*	
				T	*A*	*S*	*R*	*B & B*	*B & S*
45-deg Bends									
3		250	25	0.48	3.0	11.0	3.62	50	40
4		250	25	0.52	4.0	12.0	4.81	65	55
6		250	25	0.55	5.0	13.0	7.25	100	85
8		250	25	0.60	5.5	13.5	8.44	145	130
10		250	25	0.68	6.5	14.5	10.88	200	180
12		250	25	0.75	7.5	15.5	13.25	270	250
14	I	150	25	0.66	7.5	15.5	12.06	290	265
14	II	250	25	0.82	7.5	15.5	12.06	330	300
14	I	250	DI*	0.66	7.5	15.5	12.06	290	265
16	I	150	30	0.70	8.0	16.0	13.25	375	340
16	II	250	30	0.89	8.0	16.0	13.25	435	390
16	I	250	DI	0.70	8.0	16.0	13.25	375	340
18	I	150	30	0.75	8.5	16.5	14.50	450	415
18	II	250	30	0.96	8.5	16.5	14.50	540	485
18	I	250	DI	0.75	8.5	16.5	14.50	450	415
20	I	150	30	0.80	9.5	17.5	16.88	560	520
20	II	250	30	1.03	9.5	17.5	16.88	685	615
20	I	250	DI	0.80	9.5	17.5	16.88	560	520
24	I	150	30	0.89	11.0	19.0	18.12	785	730
24	II	250	30	1.16	11.0	19.0	18.12	985	890
24	I	250	DI	0.89	11.0	19.0	18.12	785	730
30	I	150	30	1.03	15.0	23.0	27.75	1,345	1,260
30	II	250	30	1.37	15.0	23.0	27.75	1,800	1,605
30	I	250	DI	1.03	15.0	23.0	27.75	1,345	1,260
36	I	150	30	1.15	18.0	26.0	35.00	2,095	1,935
36	II	250	30	1.58	18.0	26.0	35.00	2,785	2,495
36	I	250	DI	1.15	18.0	26.0	35.00	2,095	1,935
42	I	150	30	1.28	21.0	29.0	42.25	2,995	2,770
42	II	250	30	1.78	21.0	29.0	42.25	4,065	3,645
42	I	250	DI	1.28	21.0	29.0	42.25	2,995	2,770
48	I	150	30	1.42	24.0	32.0	49.50	4,120	3,840
48	II	250	30	1.96	24.0	32.0	49.50	5,635	5,075
48	I	250	DI	1.42	24.0	32.0	49.50	4,120	3,840

Dimension details of bells are shown in Table 10.12; those of spigots, Table 10.13.
* Ductile iron.

TABLE 10.4—*Mechanical-Joint Tees and Crosses (contd.)*

Size *in.*		Pressure Rating *psi*	Iron Strength *psi* (*1,000's*)	Dimensions—*in.*					Weight—*lb*			
									Tee		Cross	
Run	Branch			*T*	T_1	*H*	*J*	*S*	All MJ	MJ, PE & MJ	All MJ	MJ, PE, MJ & MJ
36	8	150	30	1.15	0.60	20.0	26.0	28.0	2,520	2,345	2,565	2,390
36	8	250	30	1.58	0.60	20.0	26.0	28.0	3,050	2,870	3,095	2,915
36	8	250	DI*	1.15	0.60	20.0	26.0	28.0	2,520	2,345	2,565	2,390
36	10	150	30	1.15	0.68	20.0	26.0	28.0	2,535	2,360	2,600	2,425
36	10	250	30	1.58	0.68	20.0	26.0	28.0	3,065	2,885	3,120	2,940
36	10	250	DI	1.15	0.68	20.0	26.0	28.0	2,535	2,360	2,600	2,425
36	12	150	30	1.15	0.75	20.0	26.0	28.0	2,550	2,375	2,630	2,455
36	12	250	30	1.58	0.75	20.0	26.0	28.0	3,075	2,895	3,140	2,960
36	12	250	DI	1.15	0.75	20.0	26.0	28.0	2,550	2,375	2,630	2,455
36	14	150	30	1.15	0.66	20.0	26.0	28.0	2,570	2,395	2,665	2,490
36	14	250	30	1.58	0.82	20.0	26.0	28.0	3,105	2,925	3,205	3,025
36	14	250	DI	1.15	0.66	20.0	26.0	28.0	2,570	2,395	2,665	2,490
36	16	150	30	1.15	0.70	20.0	26.0	28.0	2,585	2,410	2,705	2,530
36	16	250	30	1.58	0.89	20.0	26.0	28.0	3,125	2,945	3,245	3,065
36	16	250	DI	1.15	0.70	20.0	26.0	28.0	2,585	2,410	2,705	2,530
36	18	150	30	1.15	0.75	20.0	26.0	28.0	2,610	2,435	2,750	2,575
36	18	250	30	1.58	0.96	20.0	26.0	28.0	3,150	2,970	3,290	3,110
36	18	250	DI	1.15	0.75	20.0	26.0	28.0	2,610	2,435	2,750	2,575
36	20	150	30	1.15	0.80	20.0	26.0	28.0	2,635	2,460	2,805	2,630
36	20	250	35	1.58	1.03	20.0	26.0	28.0	3,175	2,995	3,345	3,165
36	20	250	DI	1.15	0.80	20.0	26.0	28.0	2,635	2,460	2,805	2,630
36	24	150	30	1.15	0.89	20.0	26.0	28.0	2,690	2,515	2,910	2,735
36	24	250	35	1.58	1.16	20.0	26.0	28.0	3,230	3,050	3,450	3,270
36	24	250	DI	1.15	0.89	20.0	26.0	28.0	2,690	2,515	2,910	2,735
36	30	150	35	1.58	1.37	28.0	28.0	36.0	4,345	4,170	4,790	4,615
36	30	250	DI	1.15	1.03	28.0	28.0	36.0	3,545	3,365	3,965	3,790
36	36	150	35	1.58	1.58	28.0	28.0	36.0	4,590	4,410	5,280	5,105
36	36	250	DI	1.15	1.15	28.0	28.0	36.0	3,745	3,565	4,370	4,190
42	12	150	30	1.28	0.75	23.0	30.0	31.0	3,555	3,335	3,640	3,420
42	12	250	30	1.78	0.75	23.0	30.0	31.0	4,385	4,160	4,450	4,225
42	12	250	DI	1.28	0.75	23.0	30.0	31.0	3,555	3,335	3,640	3,420
42	14	150	30	1.28	0.66	23.0	30.0	31.0	3,575	3,355	3,675	3,455
42	14	250	30	1.78	0.82	23.0	30.0	31.0	4,415	4,190	4,515	4,290
42	14	250	DI	1.28	0.66	23.0	30.0	31.0	3,575	3,355	3,675	3,455
42	16	150	30	1.28	0.70	23.0	30.0	31.0	3,595	3,375	3,715	3,495
42	16	250	30	1.78	0.89	23.0	30.0	31.0	4,435	4,210	4,550	4,325
42	16	250	DI	1.28	0.70	23.0	30.0	31.0	3,595	3,375	3,715	3,495
42	18	150	30	1.28	0.75	23.0	30.0	31.0	3,615	3,395	3,755	3,535
42	18	250	30	1.78	0.96	23.0	30.0	31.0	4,455	4,230	4,595	4,370
42	18	250	DI	1.28	0.75	23.0	30.0	31.0	3,615	3,395	3,755	3,535
42	20	150	30	1.28	0.80	23.0	30.0	31.0	3,640	3,420	3,810	3,590
42	20	250	30	1.78	1.03	23.0	30.0	31.0	4,480	4,255	4,645	4,420
42	20	250	DI	1.28	0.80	23.0	30.0	31.0	3,640	3,420	3,810	3,590
42	24	150	30	1.78	1.16	23.0	30.0	31.0	4,530	4,305	4,745	4,520
42	24	250	DI	1.28	0.89	23.0	30.0	31.0	3,690	3,470	3,910	3,690
42	30	150	30	1.78	1.37	31.0	31.0	39.0	5,800	5,575	6,210	5,985
42	30	250	DI	1.28	1.03	31.0	31.0	39.0	4,650	4,425	5,040	4,815
42	36	150	DI	1.28	1.15	31.0	31.0	39.0	4,880	4,655	5,425	5,200

Dimension details of mechanical-joint bell are shown in Table 10.1; dimension details of plain ends are shown in Table 10.2.
* Ductile iron.

TABLE 10.4—*Mechanical-Joint Tees and Crosses (contd.)*

Size *in.*		Pressure Rating *psi*	Iron Strength *psi* (*1,000's*)	Dimensions—*in.*					Weight—*lb*			
									Tee		Cross	
Run	Branch			*T*	T_1	*H*	*J*	*S*	All MJ	MJ, PE & MJ	All MJ	MJ, PE, MJ & MJ
42	36	250	DI*	1.78	1.58	31.0	31.0	39.0	6,075	5,850	6,655	6,430
42	42	150	DI	1.28	1.28	31.0	31.0	39.0	5,085	4,860	5,840	5,615
42	42	250	DI	1.78	1.78	31.0	31.0	39.0	6,320	6,095	7,145	6,920
48	12	150	30	1.42	0.75	26.0	34.0	34.0	4,870	4,580	4,955	4,665
48	12	250	30	1.96	0.75	26.0	34.0	34.0	6,025	5,735	6,095	5,805
48	12	250	DI	1.42	0.75	26.0	34.0	34.0	4,870	4,580	4,955	4,665
48	14	150	30	1.42	0.66	26.0	34.0	34.0	4,885	4,595	4,985	4,695
48	14	250	30	1.96	0.82	26.0	34.0	34.0	6,055	5,770	6,155	5,865
48	14	250	DI	1.42	0.66	26.0	34.0	34.0	4,885	4,595	4,985	4,695
48	16	150	30	1.42	0.70	26.0	34.0	34.0	4,905	4,615	5,025	4,735
48	16	250	30	1.96	0.89	26.0	34.0	34.0	6,075	5,785	6,195	5,905
48	16	250	DI	1.42	0.70	26.0	34.0	34.0	4,905	4,615	5,025	4,735
48	18	150	30	1.42	0.75	26.0	34.0	34.0	4,925	4,635	5,065	4,775
48	18	250	30	1.96	0.96	26.0	34.0	34.0	6,095	5,805	6,235	5,945
48	18	250	DI	1.42	0.75	26.0	34.0	34.0	4,925	4,635	5,065	4,775
48	20	150	30	1.42	0.80	26.0	34.0	34.0	4,950	4,660	5,115	4,825
48	20	250	30	1.96	1.03	26.0	34.0	34.0	6,120	5,830	6,285	5,995
48	20	250	DI	1.42	0.80	26.0	34.0	34.0	4,950	4,660	5,115	4,825
48	24	150	30	1.42	0.89	26.0	34.0	34.0	4,995	4,705	5,210	4,920
48	24	250	30	1.96	1.16	26.0	34.0	34.0	6,165	5,880	6,375	6,085
48	24	250	DI	1.42	0.89	26.0	34.0	34.0	4,995	4,705	5,210	4,920
48	30	150	30	1.96	1.37	26.0	34.0	34.0	6,315	6,025	6,670	6,385
48	30	250	DI	1.42	1.03	26.0	34.0	34.0	5,140	4,855	5,495	5,210
48	36	150	30	1.96	1.58	34.0	34.0	42.0	7,835	7,545	8,360	8,075
48	36	250	DI	1.42	1.15	34.0	34.0	42.0	6,280	5,995	6,790	6,500
48	42	150	DI	1.42	1.28	34.0	34.0	42.0	6,510	6,225	7,150	6,860
48	42	250	DI	1.96	1.78	34.0	34.0	42.0	8,130	7,845	8,815	8,530
48	48	150	DI	1.42	1.42	34.0	34.0	42.0	6,765	6,475	7,655	7,370
48	48	250	DI	1.96	1.96	34.0	34.0	42.0	8,420	8,135	9,380	9,095

Dimension details of mechanical-joint bell are shown in Table 10.1; dimension details of plain ends, are shown in Table 10.2.
* Ductile iron.

TABLE 10.14
Bell-and-Spigot Bends

Size *in.*	Bell Design	Pressure Rating *psi*	Iron Strength *psi* (*1,000's*)	Dimensions—*in.*				Weight—*lb*	
				T	*A*	*S*	*R*	*B & B*	*B & S*
90-deg Bends									
3		250	25	0.48	5.5	13.5	4.0	55	45
4		250	25	0.52	6.5	14.5	4.5	70	60
6		250	25	0.55	8.0	16.0	6.0	110	95
8		250	25	0.60	9.0	17.0	7.0	165	150
10		250	25	0.68	11.0	19.0	9.0	230	210
12		250	25	0.75	12.0	20.0	10.0	305	285
14	I	150	25	0.66	14.0	22.0	11.5	360	335
14	II	250	25	0.82	14.0	22.0	11.5	410	385
14	I	250	DI*	0.66	14.0	22.0	11.5	360	335
16	I	150	30	0.70	15.0	23.0	12.5	465	430
16	II	250	30	0.89	15.0	23.0	12.5	545	500
16	I	250	DI	0.70	15.0	23.0	12.5	465	430
18	I	150	30	0.75	16.5	24.5	14.0	575	540
18	II	250	30	0.96	16.5	24.5	14.0	695	635
18	I	250	DI	0.75	16.5	24.5	14.0	575	540
20	I	150	30	0.80	18.0	26.0	15.5	710	670
20	II	250	30	1.03	18.0	26.0	15.5	880	805
20	I	250	DI	0.80	18.0	26.0	15.5	710	670
24	I	150	30	0.89	22.0	30.0	18.5	1,055	1,000
24	II	250	30	1.16	22.0	30.0	18.5	1,335	1,235
24	I	250	DI	0.89	22.0	30.0	18.5	1,055	1,000
30	I	150	30	1.03	25.0	33.0	21.5	1,660	1,575
30	II	250	30	1.37	25.0	33.0	21.5	2,210	2,020
30	I	250	DI	1.03	25.0	33.0	21.5	1,660	1,575
36	I	150	30	1.15	28.0	36.0	24.5	2,480	2,315
36	II	250	30	1.58	28.0	36.0	24.5	3,305	3,015
36	I	250	DI	1.15	28.0	36.0	24.5	2,480	2,315
42	I	150	30	1.28	31.0	39.0	27.5	3,440	3,220
42	II	250	30	1.78	31.0	39.0	27.5	4,690	4,270
42	I	250	DI	1.28	31.0	39.0	27.5	3,440	3,220
48	I	150	30	1.42	34.0	42.0	30.5	4,635	4,355
48	II	250	30	1.96	34.0	42.0	30.5	6,340	5,780
48	I	250	DI	1.42	34.0	42.0	30.5	4,635	4,355

Dimension details of bells are shown in Table 10.12; those of spigots, Table 10.13.
* Ductile iron.

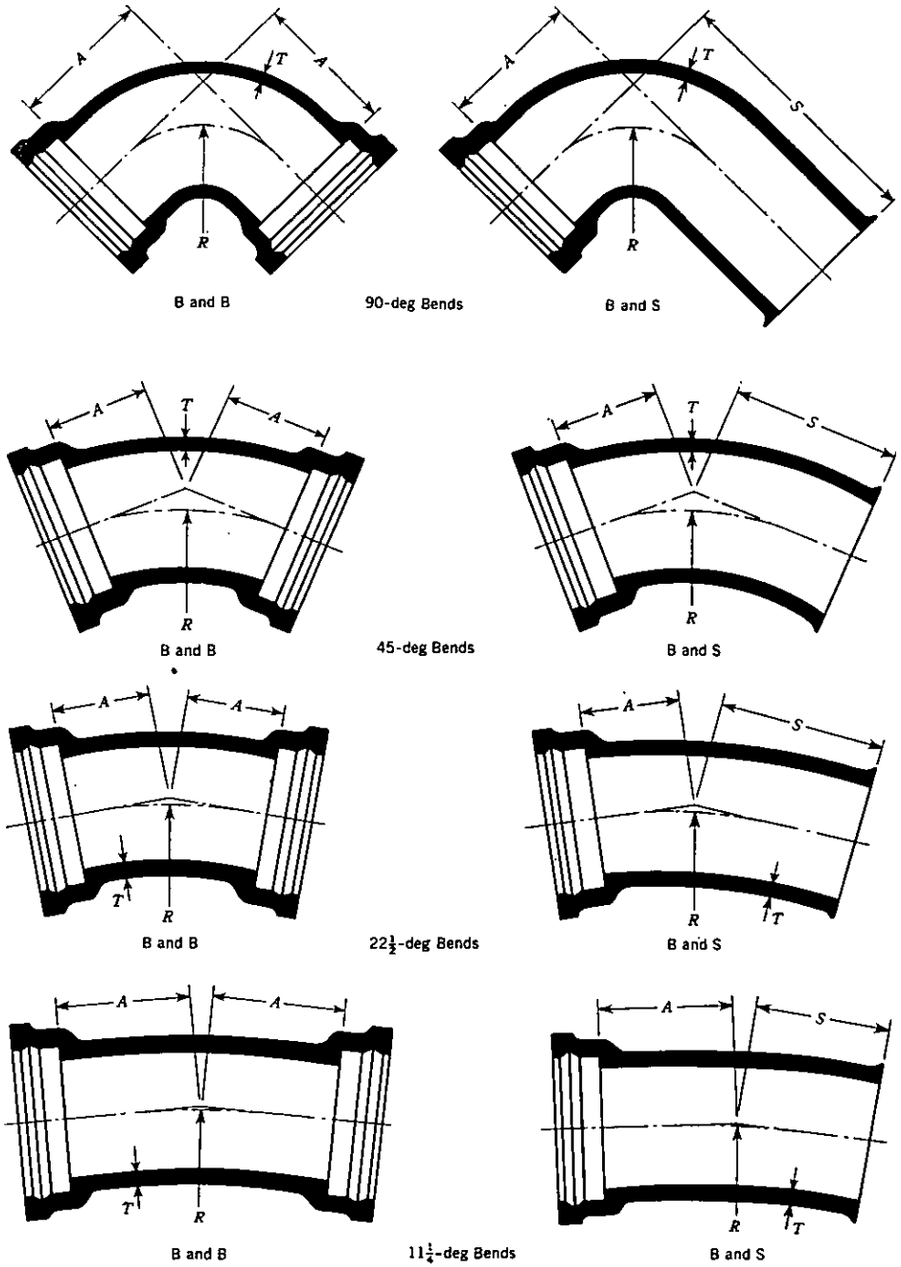

Fig. 10.14. Bell-and-Spigot Bends (See Table 10.14)

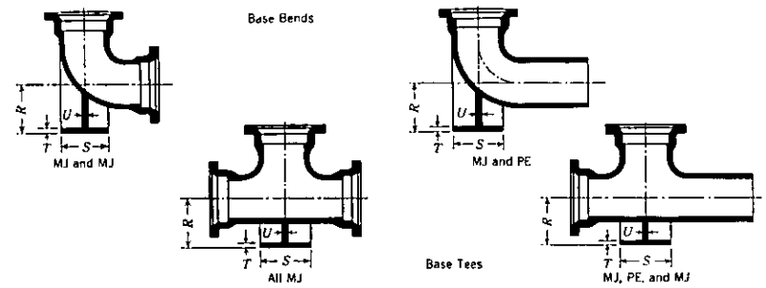

Fig. 10.5. Mechanical-Joint Base Bends and Tees (See Table 10.5)

For other dimensions of base bends, see Table 10.3; for other dimensions of base tees, see Table 10.4.

TABLE 10.5

Mechanical-Joint Base Fittings

Size *in.*	Pressure Rating *psi*	Iron Strength *psi (1,000's)*	Dimensions—*in.*				Weight—*lb*		
			R†	*S* Diam.	*T*	*U*	MJ & MJ	MJ & PE	Base Only
			Base Bends						
3	250	25	4.88	5.00	0.56	0.50	45	45	10
4	250	25	5.50	6.00	0.62	0.50	65	60	10
6	250	25	7.00	7.00	0.69	0.62	105	100	20
8	250	25	8.38	9.00	0.94	0.88	165	160	40
10	250	25	9.75	9.00	0.94	0.88	235	235	45
12	250	25	11.25	11.00	1.00	1.00	320	320	65
14	150	25	12.50	11.00	1.00	1.00	410	395	70
14	250	25	12.50	11.00	1.00	1.00	450	435	70
14	250	DI*	12.50	11.00	1.00	1.00	410	395	70
16	150	30	13.75	11.00	1.00	1.00	505	485	75
16	250	30	13.75	11.00	1.00	1.00	565	545	75
16	250	DI	13.75	11.00	1.00	1.00	505	485	75
18	150	30	15.00	13.50	1.12	1.12	660	635	115
18	250	30	15.00	13.50	1.12	1.12	740	715	115
18	250	DI	15.00	13.50	1.12	1.12	660	635	115
20	150	30	16.00	13.50	1.12	1.12	800	770	120
20	250	30	16.00	13.50	1.12	1.12	910	875	120
20	250	DI	16.00	13.50	1.12	1.12	800	770	120
24	150	30	18.50	13.50	1.12	1.12	1,155	1,115	130
24	250	30	18.50	13.50	1.12	1.12	1,345	1,305	130
24	250	DI	18.50	13.50	1.12	1.12	1,155	1,115	130
30	150	30	23.00	16.00	1.19	1.15	1,880	1,775	190
30	250	30	23.00	16.00	1.19	1.15	2,220	2,110	190
30	250	DI	23.00	16.00	1.19	1.15	1,880	1,775	190
36	150	30	26.00	19.00	1.25	1.15	2,725	2,560	250
36	250	30	26.00	19.00	1.25	1.15	3,295	3,130	250
36	250	DI	26.00	19.00	1.25	1.15	2,725	2,560	250
42	150	30	30.00	23.50	1.44	1.28	3,820	3,610	410
42	250	30	30.00	23.50	1.44	1.28	4,665	4,460	410
42	250	DI	30.00	23.50	1.44	1.28	3,820	3,610	410
48	150	30	34.00	25.00	1.56	1.42	5,110	4,845	515
48	250	30	34.00	25.00	1.56	1.42	6,260	5,990	515
48	250	DI	34.00	25.00	1.56	1.42	5,110	4,845	515

* Ductile iron.
† Dimension "*R*" is a finished dimension; unfinished bases will be ⅛ in. longer: for base drilling see Table 10.24.

TABLE 10.5—*Mechanical-Joint Base Fittings (contd.)*

Size *in.*	Pressure Rating *psi*	Iron Strength *psi (1,000's)*	Dimensions—*in.*				Weight—*lb*		
			R†	*S* Diam.	*T*	*U*	All MJ	MJ, PE & MJ	Base Only
					Base Tees				
3	250	25	4.88	5.00	0.56	0.50	60	60	5
4	250	25	5.50	6.00	0.62	0.50	90	85	10
6	250	25	7.00	7.00	0.69	0.62	140	135	15
8	250	25	8.38	9.00	0.94	0.88	215	210	30
10	250	25	9.75	9.00	0.94	0.88	340	340	30
12	250	25	11.25	11.00	1.00	1.00	455	455	45
14	150	25	12.50	11.00	1.00	1.00	635	620	50
14	250	30	12.50	11.00	1.00	1.00	635	620	50
14	250	DI*	12.50	11.00	1.00	1.00	570	550	50
16	150	30	13.75	11.00	1.00	1.00	790	770	50
16	250	35	13.75	11.00	1.00	1.00	790	770	50
16	250	DI	13.75	11.00	1.00	1.00	700	675	50
18	150	30	15.00	13.50	1.12	1.12	1,020	995	75
18	250	35	15.00	13.50	1.12	1.12	1,020	995	75
18	250	DI	15.00	13.50	1.12	1.12	895	870	75
20	150	35	16.00	13.50	1.12	1.12	1,260	1,230	75
20	250	DI	16.00	13.50	1.12	1.12	1,095	1,065	75
24	150	35	18.50	13.50	1.12	1.12	1,895	1,855	80
24	250	DI	18.50	13.50	1.12	1.12	1,615	1,570	80
30	150	35	23.00	16.00	1.19	1.15	3,225	3,110	120
30	250	DI	23.00	16.00	1.19	1.15	2,715	2,600	120
36	150	35	26.00	19.00	1.25	1.15	4,750	4,570	160
36	250	DI	26.00	19.00	1.25	1.15	3,905	3,725	160
42	150	DI	30.00	23.50	1.44	1.28	5,355	5,130	270
42	250	DI	30.00	23.50	1.44	1.28	6,590	6,365	270
48	150	DI	34.00	25.00	1.56	1.42	7,100	6,810	335
48	250	DI	34.00	25.00	1.56	1.42	8,755	8,470	335

* Ductile iron.
† Dimension "*R*" is a finished dimension: unfinished bases will be ⅛ in. longer; for base drilling see Table 10.24.

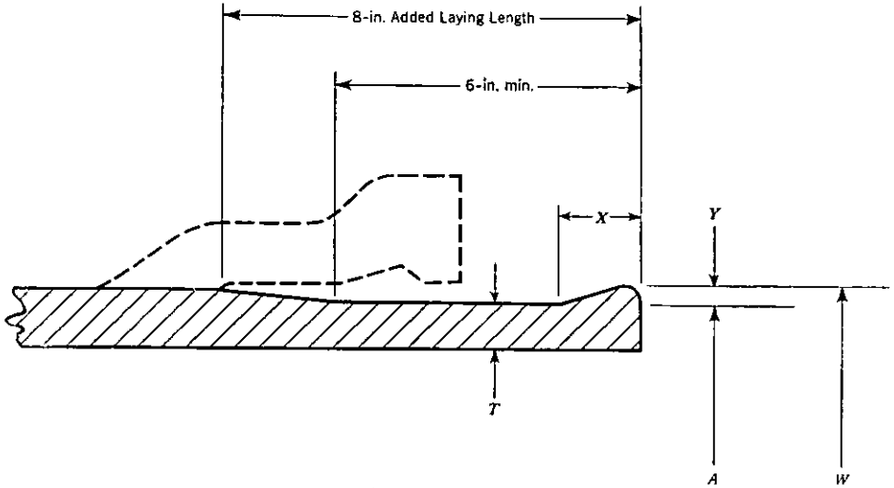

$X = \frac{3}{4}$ in. for Sizes 3-6 in.
$X = 1$ in. for Sizes 8-48 in.
$Y = \frac{3}{16}$ in. for Sizes 3-12 in.
$Y = \frac{1}{4}$ in. for Sizes 14-48 in.

Fig. 10.13. Bell-and-Spigot Spigot End Dimensions and Tolerances (See Table 10.13)
Bell contour shown indicates bottom of socket as located in standard all-bell fittings.

TABLE 10.13
Bell-and-Spigot Spigot End Dimensions and Tolerances

Size *in*	Dimensions—*in.*			Wgt. of Spigot End *lb*
	A‡	*T*	*W*	
3	3.96	0.48 − 0.10	4.34 ± 0.12	11
4	4.90	0.47 − 0.10	5.28 ± 0.12	14
6	7.00	0.50 − 0.10	7.38 ± 0.12	22
8	9.18	0.54 − 0.12	9.56 ± 0.12	32
10	11.25	0.60 − 0.12	11.63 ± 0.12	43
12	13.35	0.68 − 0.12	13.73 ± 0.12	58
14	15.30	0.66 − 0.12	15.80 ± 0.12	65
16	17.40	0.70 − 0.12	17.90 ± 0.12	78
18	19.50	0.75 − 0.12	20.00 ± 0.15	94
20	21.60	0.80 − 0.12	22.10 ± 0.15	112
24	25.80	0.89 − 0.15	26.30 ± 0.15	148
30	32.00	1.03 − 0.15	32.50 ± 0.20	212
36	38.30	1.15 − 0.15	38.80 ± 0.20	284
42	44.50	1.28 − 0.15	45.00 ± 0.20	366
48	50.80	1.42 − 0.15	51.30 ± 0.24	464

Bell contour shown in Fig. 10.13 indicates bottom of socket in a standard all-bell fitting.
‡ This table shows only one spigot outside diameter, Dimension *A*, for each size. This spigot is for use with pipe made in accordance with ASA A21.6 and A21.8. For pipe 14 in. and larger with special OD sizes, the spigot OD's should be specified to match those of the pipe.

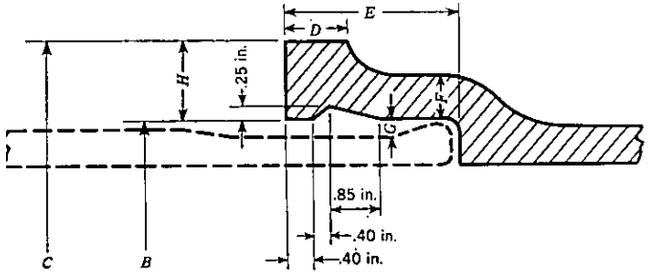

Fig. 10.12. Bell-and-Spigot Bell Dimensions and Tolerances (See Table 10.12)

TABLE 10.12

Bell-and-Spigot Bell Dimensions and Tolerances

Size *in.*	Bell Design	Dimensions—*in.*							Wgt. of Bell *lb*
		*B**	*C*	*D*	*E*	*F*	*G*	*H*	
3		4.66±0.12	7.26	1.25	3.50	0.65	0.35	1.30	20
4		5.70±0.12	8.30	1.50	4.00	0.65	0.40	1.30	25
6		7.80±0.12	10.60	1.50	4.00	0.70	0.40	1.40	35
8		10.00±0.12	13.00	1.50	4.00	0.75	0.41	1.50	49
10		12.10±0.12	15.30	1.50	4.00	0.80	0.42	1.60	62
12		14.20±0.12	17.60	1.50	4.00	0.85	0.42	1.70	76
14	I	16.10±0.12	19.50	1.50	4.00	0.85	0.40	1.70	88
14	II†	16.10±0.12	19.70	1.50	4.00	0.90	0.40	1.80	94
16	I	18.40±0.12	22.00	1.75	4.00	0.90	0.50	1.80	114
16	II	18.40±0.12	22.20	1.75	4.00	1.00	0.50	1.90	125
18	I	20.50±0.15	24.30	1.75	4.00	0.95	0.50	1.90	133
18	II	20.50±0.15	24.70	1.75	4.00	1.05	0.50	2.10	151
20	I	22.60±0.15	26.60	1.75	4.00	1.00	0.50	2.00	156
20	II	22.60±0.15	27.20	1.75	4.00	1.15	0.50	2.30	185
24	I	26.80±0.15	31.00	2.00	4.00	1.05	0.50	2.10	199
24	II	26.80±0.15	31.80	2.00	4.00	1.25	0.50	2.50	245
30	I	33.00±0.20	37.60	2.00	4.50	1.15	0.50	2.30	298
30	II	33.00±0.20	39.00	2.00	4.50	1.50	0.50	3.00	407
36	I	39.30±0.20	44.90	2.00	4.50	1.40	0.50	2.80	446
36	II	39.30±0.20	46.10	2.00	4.50	1.80	0.50	3.40	574
42	I	45.50±0.20	51.50	2.00	5.00	1.50	0.50	3.00	586
42	II	45.50±0.20	53.10	2.00	5.00	1.95	0.50	3.80	786
48	I	51.80±0.24	58.40	2.00	5.00	1.65	0.50	3.30	745
48	II	51.80±0.24	60.20	2.00	5.00	2.20	0.50	4.20	1,023

* This table shows only one socket diameter, Dimension *B*, as standard for each size bell. This socket is for use with pipe in accordance with ASA A21.6 and A21.8. For pipe 14 in. and larger with special OD sizes, the socket diameters for the fittings should be specified.

† Bell Design II shows a thicker bell section, as required with a thicker body section of fittings; the changes in dimensions *C*, *F*, and *H* should be noted.

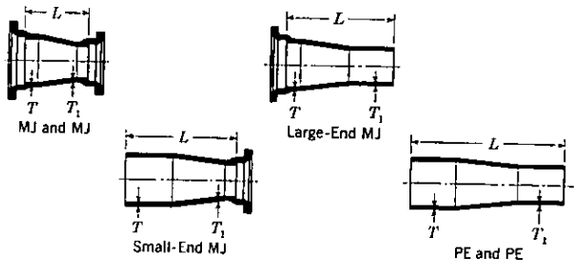

Fig. 10.6. Mechanical-Joint Reducers (See Table 10.6)

TABLE 10.6

Mechanical-Joint Reducers

Size *in.*		Pressure Rating *psi*	Iron Strength *psi* (*1,000's*)	Thickness *in.*		MJ & MJ		Small-End MJ		Large-End MJ		PE & PE	
Large End	Small End			*T*	T_1	*L* *in.*	Weight *lb*	*L* *in.*	Weight *lb*	*L* *in.*	Weight *lb*	*L* *in.*	Weight *lb*
3	2	250	25	0.48	0.35	6	23	8½	17				
3	2¼	250	25	0.48	0.35	6	23	8½	17				
4	2	250	25	0.52	0.35	7	31	9½	20				
4	2¼	250	25	0.52	0.35	7	32	9½	21				
4	3	250	25	0.52	0.48	7	40	15	35	15	40	23	35
6	2	250	25	0.55	0.35	9	44	9½	28				
6	2¼	250	25	0.55	0.35	9	45	9½	29				
6	3	250	25	0.55	0.48	9	55	17	50	17	55	25	50
6	4	250	25	0.55	0.52	9	60	17	60	17	60	25	55
8	4	250	25	0.60	0.52	11	80	19	80	19	80	27	75
8	6	250	25	0.60	0.55	11	95	19	90	19	90	27	85
10	4	250	25	0.68	0.52	12	105	20	100	20	100	28	100
10	6	250	25	0.68	0.55	12	115	20	115	20	115	28	115
10	8	250	25	0.68	0.60	12	135	20	130	20	130	28	130
12	4	250	25	0.75	0.52	14	135	22	130	22	130	30	130
12	6	250	25	0.75	0.55	14	150	22	150	22	145	30	145
12	8	250	25	0.75	0.60	14	165	22	165	22	165	30	165
12	10	250	25	0.75	0.68	14	190	22	190	22	185	30	185
14	6	150	25	0.66	0.55	16	190	24	175	24	185	32	170
14	6	250	25	0.82	0.55	16	200	24	185	24	200	32	185
14	6	250	DI*	0.66	0.55	16	190	24	175	24	185	32	170
14	8	150	25	0.66	0.60	16	210	24	190	24	205	32	190
14	8	250	25	0.82	0.60	16	220	24	205	24	220	32	205
14	8	250	DI	0.66	0.60	16	210	24	190	24	205	32	190
14	10	150	25	0.66	0.68	16	230	24	215	24	230	32	215
14	10	250	25	0.82	0.68	16	245	24	230	24	245	32	230
14	10	250	DI	0.66	0.68	16	230	24	215	24	230	32	215
14	12	150	25	0.66	0.75	16	255	24	240	24	255	32	240
14	12	250	25	0.82	0.75	16	270	24	255	24	275	32	260
14	12	250	DI	0.66	0.75	16	255	24	240	24	255	32	240

For dimension details of mechanical-joint bells, see Table 10.1; for dimension details of plain ends, see Table 10.2. Eccentric reducers with the same dimensions and weights given for concentric reducers are available from most manufacturers if specified on the purchase order.

* Ductile iron.

TABLE 10.6—*Mechanical-Joint Reducers (contd.)*

Size in.		Pressure Rating psi	Iron Strength psi (1,000's)	Thickness in.		MJ & MJ		Small-End MJ		Large-End MJ		PE & PE	
Large End	Small End			T	T_1	L in.	Weight lb	L in.	Weight lb	L in.	Weight lb	L in.	Weight lb
16	6	150	30	0.70	0.55	18	230	26	210	26	230	34	210
16	6	250	30	0.89	0.55	18	250	26	230	26	250	34	230
16	6	250	DI*	0.70	0.55	18	230	26	210	26	230	34	210
16	8	150	30	0.70	0.60	18	250	26	230	26	250	34	230
16	8	250	30	0.89	0.60	18	270	26	250	26	270	34	250
16	8	250	DI	0.70	0.60	18	250	26	230	26	250	34	230
16	10	150	30	0.70	0.68	18	280	26	255	26	275	34	255
16	10	250	30	0.89	0.68	18	300	26	280	26	300	34	280
16	10	250	DI	0.70	0.68	18	280	26	255	26	275	34	255
16	12	150	30	0.70	0.75	18	305	26	285	26	305	34	285
16	12	250	30	0.89	0.75	18	325	26	305	26	330	34	310
16	12	250	DI	0.70	0.75	18	305	26	285	26	305	34	285
16	14	150	30	0.70	0.66	18	335	26	310	26	315	34	295
16	14	250	30	0.89	0.82	18	370	26	350	26	355	34	335
16	14	250	DI	0.70	0.66	18	335	26	310	26	315	34	295
18	8	150	30	0.75	0.60	19	295	27	270	27	295	35	270
18	8	250	30	0.96	0.60	19	320	27	295	27	320	35	295
18	8	250	DI	0.75	0.60	19	295	27	270	27	295	35	270
18	10	150	30	0.75	0.68	19	325	27	300	27	320	35	295
18	10	250	30	0.96	0.68	19	350	27	325	27	350	35	325
18	10	250	DI	0.75	0.68	19	325	27	300	27	320	35	295
18	12	150	30	0.75	0.75	19	350	27	325	27	350	35	325
18	12	250	30	0.96	0.75	19	380	27	355	27	385	35	360
18	12	250	DI	0.75	0.75	19	350	27	325	27	350	35	325
18	14	150	30	0.75	0.66	19	380	27	355	27	365	35	340
18	14	250	30	0.96	0.82	19	425	27	400	27	410	35	385
18	14	250	DI	0.75	0.66	19	380	27	355	27	365	35	340
18	16	150	30	0.75	0.70	19	415	27	390	27	395	35	370
18	16	250	30	0.96	0.89	19	465	27	440	27	445	35	420
18	16	250	DI	0.75	0.70	19	415	27	390	27	395	35	370
20	10	150	30	0.80	0.68	20	375	28	345	28	375	36	345
20	10	250	30	1.03	0.68	20	410	28	380	28	410	36	380
20	10	250	DI	0.80	0.68	20	375	28	345	38	375	36	345
20	12	150	30	0.80	0.75	20	405	28	375	28	405	36	375
20	12	250	30	1.03	0.75	20	440	28	410	28	445	36	415
20	12	250	DI	0.80	0.75	20	405	28	375	28	405	36	375
20	14	150	30	0.80	0.66	20	430	28	400	28	415	36	385
20	14	250	30	1.03	0.82	20	485	28	455	28	470	36	440
20	14	250	DI	0.80	0.66	20	430	28	400	28	415	36	385
20	16	150	30	0.80	0.70	20	470	28	435	28	445	36	415
20	16	250	30	1.03	0.89	20	530	28	500	28	510	36	475
20	16	250	DI	0.80	0.70	20	470	28	435	28	445	36	415
20	18	150	30	0.80	0.75	20	510	28	475	28	485	36	455
20	18	250	30	1.03	0.96	20	575	28	545	28	550	36	520
20	18	250	DI	0.80	0.75	20	510	28	475	28	485	36	455
24	12	150	30	0.89	0.75	24	550	32	510	32	550	40	510
24	12	250	30	1.16	0.75	24	610	32	570	32	615	40	575
24	12	250	DI	0.89	0.75	24	550	32	510	32	550	40	510
24	14	150	30	0.89	0.66	24	575	32	535	32	560	40	520
24	14	250	30	1.16	0.82	24	660	32	620	32	645	40	605
24	14	250	DI	0.89	0.66	24	575	32	535	32	560	40	520

For dimension details of mechanical-joint bells, see Table 10.1; for dimension details of plain ends, see Table 10.2. Eccentric reducers with same dimensions and weights given for concentric reducers are available from most manufacturers if specified on the purchase order.
* Ductile iron.

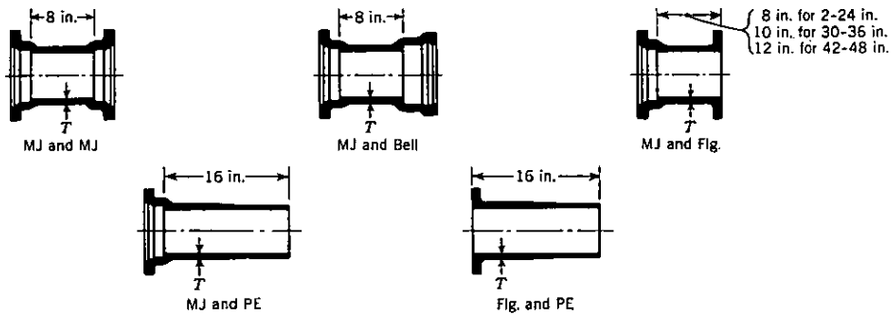

Fig. 10.11. Mechanical-Joint Connecting Pieces (See Table 10.11)

TABLE 10.11

Mechanical-Joint Connecting Pieces

Size in.	Pressure Rating psi	Iron Strength psi (1,000's)	T—in.	Weight—lb				
				MJ & MJ	MJ & Bell	MJ & Flg.‡	MJ & PE‡	Flg. & PE‡
2	250	25	0.25			15		11
2½	250	25	0.25			17		13
3	250	25	0.48	35	40	30	35	30
4	250	25	0.52	45	55	40	45	40
6	250	25	0.55	70	80	60	65	55
8	250	25	0.60	95	115	85	95	85
10	250	25	0.68	130	150	115	125	115
12	250	25	0.75	165	190	155	165	155
14	150	25	0.66	220	230	195	205	180
14	250	25	0.82	235	255	210	220	195
14	250	DI*	0.66	220	230	195	205	180
16	150	30	0.70	270	290	240	250	220
16	250	30	0.89	290	320	260	270	240
16	250	DI	0.70	270	290	240	250	220
18	150	30	0.75	325	340	280	300	255
18	250	30	0.96	350	385	305	325	280
18	250	DI	0.75	325	340	280	300	255
20	150	30	0.80	390	405	340	360	305
20	250	30	1.03	420	465	365	385	335
20	250	DI	0.80	390	405	340	360	305
24	150	30	0.89	515	530	455	475	415
24	250	30	1.16	555	620	495	515	455
24	250	DI	0.89	515	530	455	475	415
30	150	30	1.03	840	820	760	730	600
30	250	30	1.37	905	1,005	840	795	665
30	250	DI	1.03	840	820	760	730	600
36	150	30	1.15	1,170	1,170	1,070	1,005	830
36	250	30	1.58	1,270	1,410	1,195	1,105	930
36	250	DI	1.15	1,170	1,170	1,070	1,005	830
42	150	30	1.28	1,500	1,515	1,505	1,295	1,115
42	250	30	1.78	1,635	1,870	1,685	1,430	1,250
42	250	DI	1.28	1,500	1,515	1,505	1,295	1,115
48	150	30	1.42	1,910	1,930	1,885	1,640	1,390
48	250	30	1.96	2,075	2,395	2,140	1,810	1,560
48	250	DI	1.42	1,910	1,930	1,885	1,640	1,390

For dimensional details of mechanical joints, see Table 10.1; plain ends, Table 10.2; bell-and-spigot bells Table 10.12; flanges, Table 10.23.
‡ May be furnished from centrifugally cast pipe.
* Ductile iron.

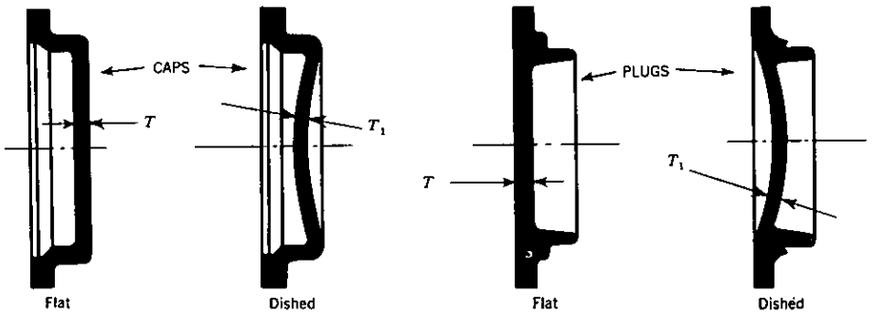

Fig. 10.10. Mechanical-Joint Caps and Plugs (See Table 10.10)

TABLE 10.10

Mechanical-Joint Caps and Plugs

Size *in.*	Pressure Rating *psi*	Iron Strength *psi* (*1,000's*)	Caps				Plugs			
			Dimensions—*in.*		Weight—*lb*		Dimensions—*in.*		Weight—*lb*	
			T	T_1	Flat	Dished	*T*	T_1	Flat	Dished
2	250	25	0.50		6		0.50		5	
2½	250	25	0.50		6		0.50		5	
3	250	25	0.50	0.48	12	12	0.50	0.48	12	12
4	250	25	0.60	0.52	20	20	0.60	0.52	20	20
6	250	25	0.65	0.55	30	30	0.65	0.55	35	30
8	250	25	0.70	0.60	45	45	0.70	0.60	50	50
10	250	25	0.75	0.68	60	60	0.75	0.68	65	70
12	250	25	0.75	0.75	80	80	0.75	0.75	85	90
14	250	30	1.00	0.82	130	115	1.00	0.82	120	120
14	250	DI*	0.82	0.66	120	110	0.82	0.66	115	115
16	250	30	1.11	0.89	175	155	1.11	0.89	155	150
16	250	DI	0.89	0.70	155	150	0.89	0.70	145	145
18	250	30	1.25	0.96	225	215	1.25	0.96	200	190
18	250	DI	0.96	0.75	195	185	0.96	0.75	185	180
20	250	30	1.40	1.03	285	250	1.40	1.03	255	215
20	250	DI	1.03	0.80	240	200	1.03	0.80	225	200
24	250	30	1.50	1.16	400	370	1.50	1.16	390	350
24	250	DI	1.16	0.89	345	300	1.16	0.89	335	290
30	150	30		1.37		680		1.37		660
30	250	DI		1.03		590		1.03		575
36	150	30		1.58		1,005		1.58		975
36	250	DI		1.15		850		1.15		815
42	150	30		1.78		1,535		1.78		1,355
42	250	DI		1.28		1,180		1.28		1,110
48	150	30		1.96		1,950		1.96		1,810
48	250	DI		1.42		1,595		1.42		1,455

* Ductile iron.

TABLE 10.6—*Mechanical-Joint Reducers (contd.)*

Size *in.*		Pressure Rating *psi*	Iron Strength *psi* (*1,000's*)	Thickness *in.*		MJ & MJ		Small-End MJ		Large-End MJ		PE & PE	
Large End	Small End			*T*	T_1	*L* *in.*	Weight *lb*	*L* *in.*	Weight *lb*	*L* *in.*	Weight *lb*	*L* *in.*	Weight *lb*
24	16	150	30	0.89	0.70	24	615	32	575	32	595	40	555
24	16	250	30	1.16	0.89	24	705	32	665	32	685	40	645
24	16	250	DI*	0.89	0.70	24	615	32	575	32	595	40	555
24	18	150	30	0.89	0.75	24	660	32	620	32	635	40	595
24	18	250	30	1.16	0.96	24	760	32	720	32	735	40	695
24	18	250	DI	0.89	0.75	24	660	32	620	32	635	40	595
24	20	150	30	0.89	0.80	24	705	32	665	32	675	40	635
24	20	250	30	1.16	1.03	24	815	32	775	32	785	40	745
24	20	250	DI	0.89	0.80	24	705	32	665	32	675	40	635
30	18	150	30	1.03	0.75	30	990	38	885	38	965	46	860
30	18	250	30	1.37	0.96	30	1,160	38	1,050	38	1,130	46	1,025
30	18	250	DI	1.03	0.75	30	990	38	885	38	965	46	860
30	20	150	30	1.03	0.80	30	1,050	38	945	38	1,020	46	915
30	20	250	30	1.37	1.03	30	1,225	38	1,120	38	1,195	46	1,090
30	20	250	DI	1.03	0.80	30	1,050	38	945	38	1,020	46	915
30	24	150	30	1.03	0.89	30	1,165	38	1,060	38	1,125	46	1,020
30	24	250	30	1.37	1.16	30	1,360	38	1,255	38	1,320	46	1,215
30	24	250	DI	1.03	0.89	30	1,165	38	1,060	38	1,125	46	1,020
36	20	150	30	1.15	0.80	36	1,450	44	1,285	44	1,420	52	1,255
36	20	250	30	1.58	1.03	36	1,730	44	1,560	44	1,695	52	1,530
36	20	250	DI	1.15	0.80	36	1,450	44	1,285	44	1,420	52	1,255
36	24	150	30	1.15	0.89	36	1,580	44	1,410	44	1,535	52	1,370
36	24	250	30	1.58	1.16	36	1,885	44	1,720	44	1,845	52	1,680
36	24	250	DI	1.15	0.89	36	1,580	44	1,410	44	1,535	52	1,370
36	30	150	30	1.15	1.03	36	1,855	44	1,690	44	1,750	52	1,585
36	30	250	30	1.58	1.37	36	2,225	44	2,060	44	2,120	52	1,950
36	30	250	DI	1.15	1.03	36	1,855	44	1,690	44	1,750	52	1,585
42	20	150	30	1.28	0.80	42	1,915	50	1,705	50	1,880	58	1,670
42	20	250	30	1.78	1.03	42	2,320	50	2,110	50	2,285	58	2,080
42	20	250	DI	1.28	0.80	42	1,915	50	1,705	50	1,880	58	1,670
42	24	150	30	1.28	0.89	42	2,060	50	1,855	50	2,020	58	1,810
42	24	250	30	1.78	1.16	42	2,495	50	2,285	50	2,455	58	2,245
42	24	250	DI	1.28	0.89	42	2,060	50	1,855	50	2,020	58	1,810
42	30	150	30	1.28	1.03	42	2,370	50	2,165	50	2,265	58	2,055
42	30	250	30	1.78	1.37	42	2,885	50	2,675	50	2,780	58	2,570
42	30	250	DI	1.28	1.03	42	2,370	50	2,165	50	2,265	58	2,055
42	36	150	30	1.28	1.15	42	2,695	50	2,485	50	2,530	58	2,320
42	36	250	30	1.78	1.58	42	3,310	50	3,100	50	3,145	58	2,935
42	36	250	DI	1.28	1.15	42	2,695	50	2,485	50	2,530	58	2,320
48	30	150	30	1.42	1.03	48	3,005	56	2,740	56	2,900	64	2,635
48	30	250	30	1.96	1.37	48	3,680	56	3,410	56	3,570	64	3,305
48	30	250	DI	1.42	1.03	48	3,005	56	2,740	56	2,900	64	2,635
48	36	150	30	1.42	1.15	48	3,370	56	3,100	56	3,205	64	2,940
48	36	250	30	1.96	1.58	48	4,160	56	3,890	56	3,990	64	3,725
48	36	250	DI	1.42	1.15	48	3,370	56	3,100	56	3,205	64	2,940
48	42	150	30	1.42	1.28	48	3,750	56	3,480	56	3,540	64	3,275
48	42	250	30	1.96	1.78	48	4,655	56	4,390	56	4,445	64	4,180
48	42	250	DI	1.42	1.28	48	3,750	56	3,480	56	3,540	64	3,275

For dimension details of mechanical-joint bells, see Table 10.1; for dimension details of plain ends, see Table 10.2. Eccentric reducers with the same dimensions and weights given for concentric reducers are available from most manufacturers if specified on the purchase order.

* Ductile iron.

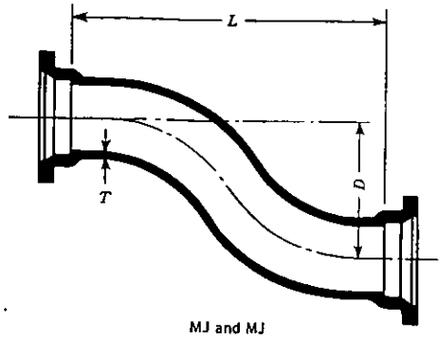

MJ and MJ

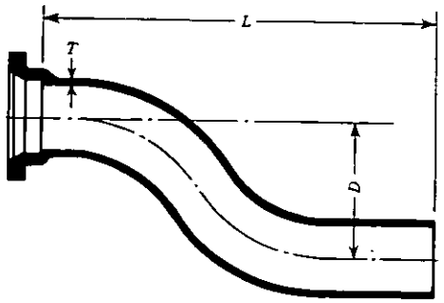

MJ and PE

Fig. 10.7. Mechanical-Joint Offsets (See Table 10.7)

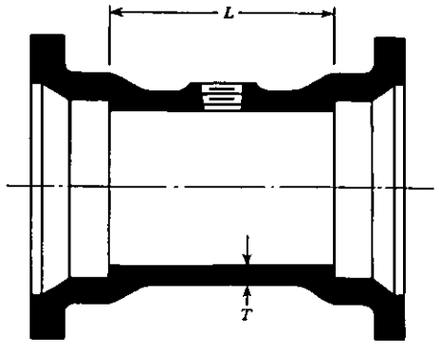

Fig. 10.8. Mechanical-Joint Tapped Tees (See Table 10.8)

TABLE 10.7

Mechanical-Joint Offsets

Size *in.*	PR‖ *psi*	IS# *psi (1,000's)*	*D* *in.*	*T* *in.*	MJ & MJ *L in.*	MJ & MJ Wgt. *lb*	MJ & PE *L in.*	MJ & PE Wgt. *lb*
3	250	25	6	0.48	19	50	27	50
3	250	25	12	0.48	22	60	30	60
3	250	25	18	0.48	30	75	38	75
4	250	25	6	0.52	19	75	27	70
4	250	25	12	0.52	22	85	30	80
4	250	25	18	0.52	30	105	38	100
6	250	25	6	0.55	20	110	28	105
6	250	25	12	0.55	26	135	34	130
6	250	25	18	0.55	33	165	41	160
8	250	25	6	0.60	21	160	29	155
8	250	25	12	0.60	28	200	36	195
8	250	25	18	0.60	35	245	43	240
10	250	25	6	0.68	22	220	30	220
10	250	25	12	0.68	30	280	38	280
10	250	25	18	0.68	38	340	46	340
12	250	25	6	0.75	26	320	34	320
12	250	25	12	0.75	37	420	45	420
12	250	25	18	0.75	48	520	56	520
14	150	25	6	0.66	27	380	35	365
14	250	25	6	0.82	27	435	35	420
14	250	DI*	6	0.66	27	380	35	365
14	150	25	12	0.66	38	480	46	465
14	250	25	12	0.82	38	560	46	545
14	250	DI	12	0.66	38	480	46	465
14	150	25	18	0.66	49	585	57	570
14	250	25	18	0.82	49	680	57	665
14	250	DI	18	0.66	49	585	57	570
16	150	30	6	0.70	27	460	35	440
16	250	30	6	0.89	27	535	35	515
16	250	DI	6	0.70	27	460	35	440
16	150	30	12	0.70	40	600	48	580
16	250	30	12	0.89	40	715	48	690
16	250	DI	12	0.70	40	600	48	580
16	150	30	18	0.70	50	710	58	690
16	250	30	18	0.89	50	850	58	830
16	250	DI	18	0.70	50	710	58	690

For dimension details of mechanical-joint bell, see Table 10.1; for dimension details of plain ends, see Table 10.2.
* Ductile iron.
‖ Pressure rating.
\# Iron strength.

TABLE 10.8

Mechanical-Joint Tapped Tees

Size *in.*	Pressure Rating *psi*	*T* *in.*	*L* *in.*	Max. Tap in Boss *in.*	Weight *lb*
3	250	0.48	8	2½	35
4	250	0.52	8	2½	45
6	250	0.55	8	2½	70
8	250	0.60	8	2½	95
10	250	0.68	8	2½	130
12	250	0.75	8	2½	165

Two bosses can be used to make a tapped cross. For dimension details of mechanical-joint bell, see Table 10.1.

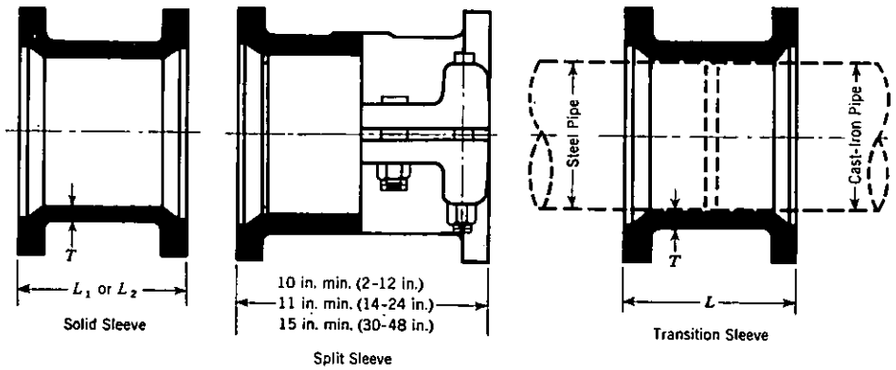

Fig. 10.9. Mechanical-Joint Sleeves (See Table 10.9)

TABLE 10.9

Mechanical-Joint Sleeves at 250 psi Pressure Rating

Size *in.*	IS‡ *psi (1,000's)*	*T* *in.*	Solid Sleeves L_1 Length *in.*	Solid Sleeves L_1 Wgt. *lb*	Solid Sleeves L_2 Length *in.*	Solid Sleeves L_2 Wgt. *lb*	Transition Sleeves Fits OD Steel Pipe	Transition Sleeves *L* Length *in.*	Transition Sleeves *L* Wgt. *lb*
2	25	0.44	8	12			2.38	8	12
2½	25	0.44	8	13			2.75	8	13
3	25	0.48	7.5	25	12	30	3.50	7.5	25
4	25	0.52	7.5	35	12	45	4.50	7.5	35
6	25	0.55	7.5	45	12	65	6.62	7.5	45
8	25	0.60	7.5	65	12	85	8.62	7.5	65
10	25	0.68	7.5	85	12	115	10.75	7.5	85
12	25	0.75	7.5	110	12	145	12.75	7.5	110
14	25	0.82	9.5	165	15	225			
16	30	0.89	9.5	200	15	275			
18	30	0.96	9.5	240	15	330			
20	30	1.03	9.5	275	15	380			
24	30	1.16	9.5	360	15	505			
30	30	1.37	15	745	24	1,085			
36	30	1.58	15	1,030	24	1,495			
42	30	1.78	15	1,330	24	1,940			
48	30	1.96	15	1,645	24	2,405			

Split sleeves are furnished with a pressure rating of 150 psi and can be furnished with boss and tap for service connections. Consult manufacturers for details. Transition sleeves are furnished with one end designed to fit standard steel pipe and the other to fit plain-end cast-iron pipe.
‡ Iron strength.

ASA A21.11
(AWWA C111)

AMERICAN STANDARD FOR RUBBER GASKET JOINTS FOR CAST-IRON PRESSURE PIPE AND FITTINGS

ASA A21.11

UDC 621.774.1:621-762.4

ASA A21.11-1964
(AWWA C111-64)

Revision of
ASA A21.11-1953
(AWWA C111-53)

AMERICAN STANDARD

for

RUBBER GASKET JOINTS FOR CAST-IRON PRESSURE PIPE AND FITTINGS

PUBLISHED BY AMERICAN WATER WORKS ASSOCIATION, INC.

SPONSORS

American Gas Association
American Society for Testing and Materials
American Water Works Association
New England Water Works Association

Approved by American Standards Association Jun. 9, 1964

AMERICAN WATER WORKS ASSOCIATION
Incorporated
2 Park Avenue, New York, N.Y. 10016

4P—17M—12/65

Table of Contents

Standard—pp. 1–5

	SEC.		SEC.
Scope	11–1	Inspection by Purchaser	11–5
Definitions	11–2	Special Requirements for the Mechanical Joint	11–6
General Requirements	11–3	Special Requirements for the Push-on Joint	11–7
Inspection and Certification by Manufacturer	11–4		

Notes on Installation of Mechanical Joints—p. 5

Tables and Figures—pp. 6–9

11.1—Mechanical-Joints
11.2—Gaskets
11.3—Bolts and Nuts

Copyright © 1964 by the American Water Works Association, Inc.
Made in USA

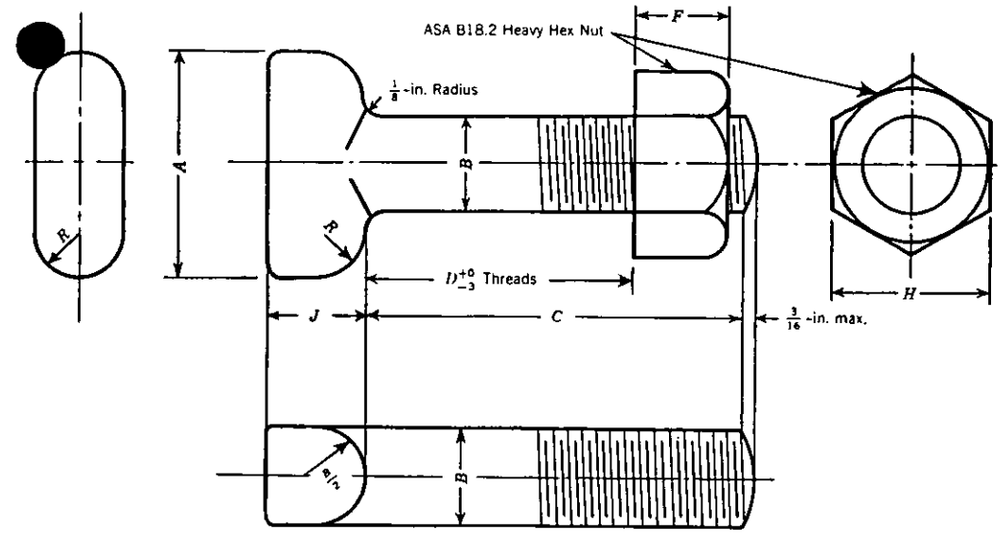

Fig. 11.3. Mechanical-Joint Bolts and Nuts

Notes

1. Dimension B is unthreaded shank.
2. Dimension D is measured to face of nut run up finger tight.
3. Draft, when required to be 6 deg maximum, may be deducted from bolt head dimensions, and radius $\frac{B}{2}$ may be changed to suit draft.
4. Gates, if required, may protrude a maximum of $\frac{1}{8}$ in. above the top of the bolt head.

TABLE 11.3

Mechanical-Joint Bolt and Nut Dimensions, in Inches

Nom. Size	A ±.05	B ±.03	C +.25 −.06	D	E*	F	H	J +.15 −.03	R Max.
$\frac{5}{8}\times2\frac{1}{2}$	1.50	0.625	2.5	1.25	11	0.625±.04	1.062+.00 −.04	0.625	0.312
$\frac{5}{8}\times3$	1.50	0.625	3.0	1.75	11	0.625±.04	1.062+.00 −.04	0.625	0.312
$\frac{3}{4}\times3\frac{1}{2}$	1.75	0.750	3.5	1.75	10	0.750±.06	1.250+.00 −.06	0.750	0.375
$\frac{3}{4}\times4$	1.75	0.750	4.0	2.25	10	0.750±.06	1.250+.00 −.06	0.750	0.375
$\frac{3}{4}\times4\frac{1}{2}$	1.75	0.750	4.5	2.75	10	0.750±.06	1.250+.00 −.06	0.750	0.375
$\frac{3}{4}\times5$	1.75	0.750	5.0	3.25	10	0.750±.06	1.250+.00 −.06	0.750	0.375
1×6	2.25	1.000	6.0	3.75	8	1.000±.08	1.625+.00 −.08	1.000	0.500
$1\frac{1}{4}\times6$	2.50	1.250	6.0	3.75	7	1.250±.08	2.000+.00 −.08	1.250	0.625

* Number of threads per inch [Coarse-Thread Series (ASA B1.1—"Unified Standard for Screw Threads") Class 2A, External Fit UNC2A and Class 2B, UNC2B (ASA B1.2—"Standard for Gages and Gaging")].

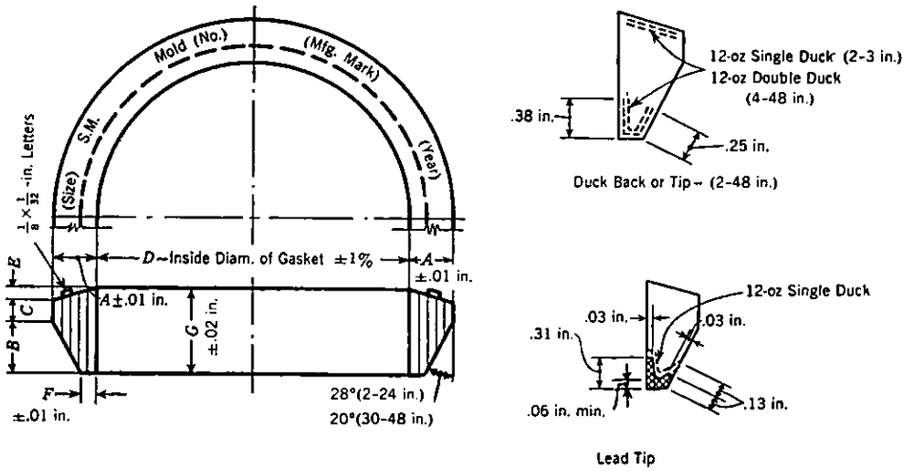

Fig. 11.2. Mechanical-Joint Gasket, 2–48 in. (See Table 11.2 and Notes)

Notes

1. Tipped or backed gaskets may be made in the same mold as plain rubber gaskets, but the inside diameter of such reinforced portions shall not exceed the "Pipe OD."
2. The duck for tips and backs shall be frictioned before molding.

TABLE 11.2

2–48-in. Mechanical-Joint Gasket Dimensions, in Inches

Pipe Size	Pipe OD	Dimensions of Plain Rubber Gaskets						
		A ±0.01 in.	B	C	D +1% −1%	E	F ±0.01 in.	G ±0.02 in.
2	2.50	0.48	0.62	0.31	2.48	0.12	0.15	1.05
2½	2.75	0.48	0.62	0.31	2.72	0.12	0.15	1.05
3	3.96	0.48	0.62	0.31	3.86	0.12	0.15	1.05
4	4.80	0.62	0.75	0.31	4.68	0.16	0.22	1.22
6	6.90	0.62	0.75	0.31	6.73	0.16	0.22	1.22
8	9.05	0.62	0.75	0.31	8.85	0.16	0.22	1.22
10	11.10	0.62	0.75	0.31	10.87	0.16	0.22	1.22
12	13.20	0.62	0.75	0.31	12.95	0.16	0.22	1.22
14	15.30	0.62	0.75	0.31	14.99	0.16	0.22	1.22
16	17.40	0.62	0.75	0.31	17.07	0.16	0.22	1.22
18	19.50	0.62	0.75	0.31	19.13	0.16	0.22	1.22
20	21.60	0.62	0.75	0.31	21.20	0.16	0.22	1.22
24	25.80	0.62	0.75	0.31	25.34	0.16	0.22	1.22
30	32.00	0.73	1.00	0.38	31.47	0.16	0.37	1.54
36	38.30	0.73	1.00	0.38	37.67	0.16	0.37	1.54
42	44.50	0.73	1.00	0.38	43.78	0.16	0.37	1.54
48	50.80	0.73	1.00	0.38	49.98	0.16	0.37	1.54

American Standard

An American Standard implies a consensus of those substantially concerned with its scope and provisions. The consensus principle extends to the initiation of work under the procedure of the American Standards Association, to the method of work to be followed, and to the final approval of the standard.

An American Standard is intended as a guide to aid the manufacturer, the consumer, and the general public. The existence of an American Standard does not in any respect preclude any party who has approved of the standard from manufacturing, selling, or using products, processes, or procedures not conforming to the standard.

An American Standard defines a product, process, or procedure with reference to one or more of the following: nomenclature, composition, construction, dimensions, tolerances, safety, operating characteristics, performance, quality, rating, certification, testing, and the service for which designed.

American Standards are subject to periodic review. They are reaffirmed or revised to meet changing economic conditions and technologic progress. Users of American Standards are cautioned to secure the latest editions.

Producers of goods made in conformity with an American Standard are encouraged to state on their own responsibility in advertising, promotion material, or on tags or labels, that the goods are produced in conformity with particular American Standards. The inclusion in such advertising and promotion media, or on tags or labels, of information concerning the characteristics covered by the standard to define its scope is also encouraged.

Foreword

This foreword is not a part of ASA A21.11 (AWWA C111), but is given for information only.

In 1926, ASA Sectional Committee A21 (Cast-Iron Pipe and Fittings) was organized. The sponsor societies were the American Gas Association, American Society for Testing and Materials, American Water Works Association, and New England Water Works Association. The scope of the committee's work was defined as follows:

Unification of specifications for cast-iron pipe, including materials: dimensions; pressure ratings; methods of manufacture (including such new developments as centrifugal casting) insofar as they may be necessary to secure satisfactory specifications; elimination of unnecessary sizes and varieties; consideration of the possibility of developing a coordinated scheme of metallic pipe and fittings applicable to all common mediums; and dimensional design of cast-iron pipe.

The types of cast-iron pipe [are] to include bell-and-spigot pipe, flanged pipe, flanged and bell mouth fittings and wall castings, pipe elbows, tees, wyes, return bends, and other fittings not now included in standard lists [and] cast-iron pipe threaded for flanges or couplings. The standardization is not to include methods of installing pipe and similar matters, except as to the making up of joints in its relationship to the dimensional standardization of pipe and fittings, as noted above.

A committee on mechanical joints, consisting of producer and user representatives, was organized in 1947. Through their work, a mechanical-joint standard was written, and, on Jan. 16, 1953, ASA approved A21.11, "A Mechanical Joint for Cast-Iron Pressure Pipe and Fittings."

In 1958 Sectional Committee A21 was reorganized, and subcommittees were established to study each group of standards in accordance with the review and revision policy of ASA. Subcommittee 2 (Joints for Pipe and Fittings) was organized and the scope of its work defined as follows:

The scope of the committee activity shall include an examination of all present A21 standards for joints for pipe and fittings to determine what is needed to bring them up to date. The examination shall include all related matters concerning joints for cast-iron pipe and fittings.

Major Revisions

Subcommitttee 2 completed its study of A21.11—1953 and submitted a proposed revision to Sectional Committee A21 in 1963. The major revisions to the standard are listed below.

Scope. The name of the standard has been changed to "Rubber Gasket Joints for Cast-Iron Pressure Pipe and Fittings." A standard for push-on joints, now widely used for water service, has been added and includes general requirements for all push-on joints now being manufactured.

Definitions. Slotted holes are now allowed in the bell flange of the mechanical joint, when such slots are

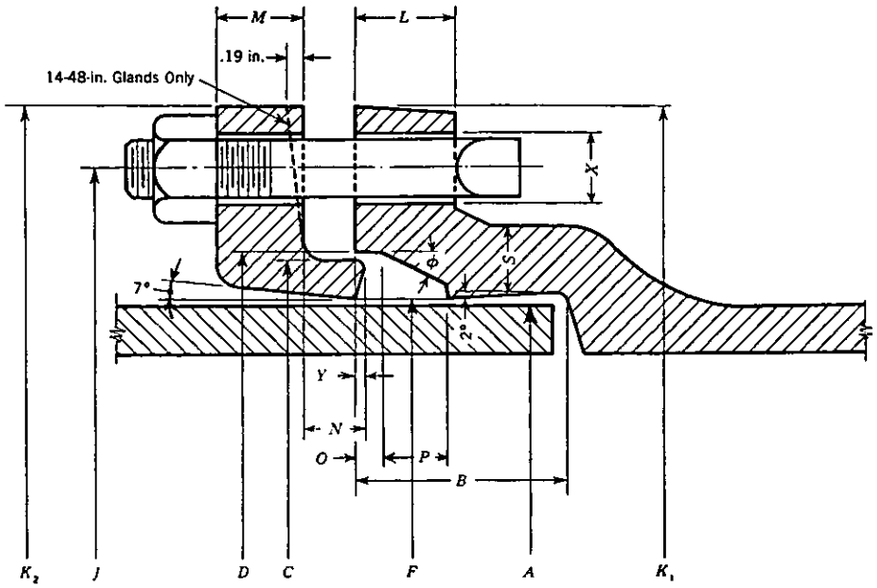

Fig. 11.1. 2–48-in. Standard Mechanical-Joint Dimensions (See Table 11.1)

Notes

1. The thickness of the bell, S, shall in all instances be equal to, and generally exceed by at least 10 per cent, the nominal wall thickness of the pipe or fitting of which it is a part.
2. Cored holes may be tapered an additional 0.06 in. in diameter.
3. In the event of ovalness of the plain end outside diameter, the mean diameter measured by a circumferential tape shall not be less than the minimum diameter shown in the table. The minor axis shall not be less than the above minimum diameter plus an additional minus tolerance of 0.04 in. for sizes 8–12 in., 0.07 in. for sizes 14–24 in. and 0.10 in. for sizes 30–48 in.
4. K_1 and K_2 are the dimensions across the bolt holes. For sizes 2 and 2½ in., both flange and gland may be oval shaped. For sizes 3–48 in., the gland may be polygon shaped.

TABLE 11.1—*Mechanical-Joint Dimensions, in Inches*

Size	A Plain End	B	C	D	P	φ	X	J	K_1 Centrifugal Pipe	K_1 Pit Cast Pipe and Fittings	K_2	L	M	N	O	P	S Centrifugal Pipe	S Pit Cast Pipe and Fittings	Y	Bolts No.	Bolts Size	Bolts Length
2	±.05 2.50	2.50	±.05 3.39	±.05 3.50	±.05 2.61	28°	+.06 −0 ¼	±.05 4.75	−.05 6.00	−.10 6.25	−.10 6.25	−.05 .75	−.05 .62	.50	.31	.63	−.05 .37	−.07 .44	.08	2	¾	2½
2½	±.05 2.75	2.50	±.05 3.64	±.05 3.75	±.05 2.86	28°	+.06 −0 ¼	±.05 5.00	−.05 6.25	−.10 6.50	−.10 6.50	−.05 .75	−.03 .62	.50	.31	.63	−.05 .37	−.07 .44	.08	2	¾	2½
3	±.06 3.96	2.50	±.04 4.84	+.06 −.04 4.94	+.07 −.03 4.06	28°	+.06 −0 ¼	±.06 6.19	−.06 7.62	−.12 7.69	−.12 7.69	−.06 .94	−.06 .62	.75	.31	.63	−.05 .47	−.10 .52	.12	4	¾	3
4	±.06 4.80	2.50	±.04 5.92	+.06 −.04 6.02	+.07 −.03 4.90	28°	+.06 −0 ¼	±.06 7.50	−.06 9.06	−.12 9.12	−.12 9.12	−.06 1.00	−.06 .75	.75	.31	.75	−.05 .55	−.10 .65	.12	4	¾	3½
6	±.06 6.90	2.50	±.04 8.02	+.06 −.04 8.12	+.07 −.03 7.00	28°	+.06 −0 ¼	±.06 9.50	−.06 11.06	−.12 11.12	−.12 11.12	−.06 1.06	−.06 .88	.75	.31	.75	−.05 .60	−.10 .70	.12	6	¾	3½
8	±.06 9.05	2.50	±.04 10.17	+.06 −.04 10.27	+.07 −.03 9.15	28°	+.06 −0 ¼	±.06 11.75	−.06 13.31	−.12 13.37	−.12 13.37	−.08 1.12	−.08 1.00	.75	.31	.75	−.05 .66	−.12 .75	.12	6	¾	4
10	±.06 11.10	2.50	±.06 12.22	+.06 −.04 12.34	+.07 −.03 11.20	28°	+.06 −0 ¼	±.06 14.00	−.06 15.62	−.12 15.69	−.12 15.62	−.08 1.19	−.08 1.00	.75	.31	.75	−.06 .72	−.12 .80	.12	8	¾	4
12	±.06 13.20	2.50	±.06 14.32	+.06 −.04 14.44	+.07 −.03 13.30	28°	+.06 −0 ¼	±.06 16.25	−.06 17.88	−.12 17.94	−.12 17.88	−.08 1.25	−.08 1.00	.75	.31	.75	−.06 .79	−.12 .85	.12	8	¾	4
14	+.05 −.08 15.30	3.50	+.07 −.05 16.40	+.07 −.05 16.54	+.06 −.07 15.44	28°	+.06 −0 ¼	±.06 18.75	−.08 20.25	−.12 20.31	−.12 20.25	−.12 1.31	−.12 1.25	.75	.31	.75	−.08 .85	−.12 .89	.12	10	¾	4
16	+.05 −.08 17.40	3.50	+.07 −.05 18.50	+.07 −.05 18.64	+.06 −.07 17.54	28°	+.06 −0 ¼	±.06 21.00	−.08 22.50	−.12 22.56	−.12 22.50	−.12 1.38	−.12 1.31	.75	.31	.75	−.08 .91	−.12 .97	.12	12	¾	4½
18	+.05 −.08 19.50	3.50	+.07 −.05 20.60	+.07 −.05 20.74	+.06 −.07 19.64	28°	+.06 −0 ¼	±.06 23.25	−.08 24.75	−.15 24.83	−.15 24.75	−.12 1.44	−.12 1.38	.75	.31	.75	−.08 .97	−.15 1.05	.12	12	¾	4½
20	+.05 −.08 21.60	3.50	+.07 −.05 22.70	+.07 −.05 22.84	+.06 −.07 21.74	28°	+.06 −0 ¼	±.06 25.50	−.08 27.00	−.15 27.08	−.15 27.00	−.12 1.50	−.12 1.44	.75	.31	.75	−.08 1.03	−.15 1.12	.12	14	¾	4½
24	+.05 −.08 25.80	3.50	+.07 −.05 26.90	+.07 −.05 27.04	+.06 −.07 25.94	28°	+.06 −0 ¼	±.06 30.00	−.08 31.50	−.15 31.58	−.15 31.50	−.12 1.62	−.12 1.56	.75	.31	.75	−.08 1.08	−.15 1.22	.12	16	¾	5
30	+.06 −.06 32.00	4.00	+.08 −.06 33.29	+.08 −.06 33.46	+.08 −.06 32.17	20°	+.06 −0 ⅛	±.06 36.88	−.12 39.12	−.18 39.12	−.18 39.12	−.12 1.81	−.12 2.00	.75	.38	1.00	−.10 1.20	−.15 1.50	.12	20	1	6
36	+.08 −.06 38.30	4.00	+.08 −.06 39.50	+.08 −.06 39.78	+.08 −.06 38.47	20°	+.06 −0 ⅛	+.06 43.75	−.12 46.00	−.18 46.00	−.18 46.00	−.12 2.00	−.12 2.00	.75	.38	1.00	−.10 1.35	−.15 1.80	.12	24	1	6
42	+.08 −.06 44.50	4.00	+.08 −.06 45.79	+.08 −.06 45.96	+.08 −.06 44.67	20°	+.06 −0 ⅛	+.06 50.62	−.12 53.12	−.18 53.12	−.18 53.12	−.12 2.00	−.12 2.00	.75	.38	1.00	−.10 1.48	−.15 1.95	.12	28	1¼	6
48	+.08 −.06 50.80	4.00	+.08 −.06 52.09	+.08 −.06 52.26	+.08 −.06 50.97	20°	+.06 −0 ⅛	±.06 57.50	−.12 60.00	−.18 60.00	−.18 60.00	−.12 2.00	−.12 2.00	.75	.38	1.00	−.10 1.61	−.15 2.20	.12	32	1¼	6

necessary to allow insertion of the bolts. The definition of the push-on joint has been added.

Gaskets for mechanical joints. Requirements for synthetic-rubber gaskets are now included in the standard. A definite hardness range, a minimum ultimate tensile requirement, a minimum ultimate elongation requirement, and an aging requirement by the oxygen-pressure method are now specified. ASTM methods of tests for the above requirements are listed.

The committee is continuing its study of a compression set or stress relaxation requirement in an effort to arrive at a meaningful test.

Dimensions for sizes 2 and 2½ in. have been added to the gasket drawing (Fig. 11.2) and all dimensions for sizes 30–48 in. are included. The section showing a Thiokol-tipped gasket has been deleted.

Bolts and nuts for mechanical joint. High-strength, cast-iron bolts and nuts containing 0.50 per cent copper or high-strength low-alloy steel bolts and nuts may be furnished at the option of the manufacturer. Extensive laboratory and field testing has shown that steel bolts and nuts alloyed as specified have corrosion resistance equal to or greater than that of the high-strength, cast-iron bolts and nuts specified.

The proof test load for the assembled ⅝-in. bolt and nut has been adjusted to 9,000 lb; for the ¾-in., to 13,500 lb—both criteria based on 45,000 psi stress at the root of the thread.

Two sizes of bolts, ⅝×2½ in. and 1×6 in., have been added to Table 11.3, and one, 1×5½ in., has been deleted. Requirements for threads, fits, and gaging have been added to the drawing (Fig. 11.3).

Push-on joint requirements. As the design of push-on joints is not completely standardized, no drawing of them has been included in this standard. Detailed information can be obtained by the purchaser from the manufacturer.

The gasket requirements cover all types of gaskets now being furnished for push-on joints. A general lubricant requirement for this type joint has been included.

Options. This standard includes certain options which, if desired, ***must*** be specified on the purchase order. The options are listed in sections 11–4—Manufacturer's Certification of Inspections and Tests, and 11–5—Inspection by Purchaser.

Committee Personnel

Subcommittee 2, which reviewed A21.11—1953 and developed this revision, had the following personnel at that time:

ROLF H. JENSEN, *Chm.* HERBERT W. STUART, *Vice-Chm.*

User Members

KENNETH J. CARL
JOHN W. CARROLL
HOWARD W. NIEMEYER
ROY L. ORNDORFF
WILLIAM L. TOWNER

Producer Members

LOUIS A. CAMEROTA
BRUCE I. DEDMAN
GEORGE A. MCDONALD
EDWARD C. SEARS

Sectional Committee A21 (Cast-Iron Pipe and Fittings), which reviewed and approved this revision of A21.11 had the following personnel at the time of approval:

EDWIN B. COBB, *Chm.*
HERBERT W. STUART, *Vice-Chm.*
JAMES B. RAMSEY, *Secy.*

Organization Represented	*Name of Representative*
American Gas Association	RICHMOND C. HOLCOMBE
American Society of Civil Engineers	KENNETH W. HENDERSON
American Society of Mechanical Engineers	LOUIS R. HOWSON
American Society for Testing and Materials	HARRY P. HAGEDORN
American Water Works Association	S. LOGAN KERR
Cast Iron Pipe Research Association	WALLACE T. MILLER HERBERT W. STUART J. THOMPSON VANN
Manufacturers' Standardization Society of the Valve and Fittings Industry	GEORGE A. MACDONALD
New England Water Works Association	EDWIN B. COBB
Standardization Division, General Services Administration	
Member at Large	ROLF H. JENSEN

resentative quality control test results to the manufacturer.

11-7.4. *Lubricant.* The lubricant shall be suitable for lubricating the parts of the joint in assembly. The lubricant shall be nontoxic, shall not support the growth of bacteria, and shall have no deteriorating effects on the gasket material. It shall not impart taste or odor to water in a pipe that has been flushed in accordance with AWWA C601-54—"Standard for Disinfecting Water Mains." The lubricant containers shall be labeled with the trade name or trademark and the pipe manufacturer's name.

Notes on Installation of Mechanical Joints

These notes are not part of the standard, but are given for information only.

The successful operation of the mechanical joint specified requires that the spigot be centrally located in the bell and that adequate anchorage shall be provided where abrupt changes in direction and dead ends occur.

The rubber gasket seals most effectively (particularly when sealing gas) if the surfaces with which it comes in contact are cleaned thoroughly (as, for example, with a wire brush) just prior to assembly to remove all loose rust or foreign material. Lubrication and additional cleaning are provided by brushing both the gasket and the spigot (as with soapy water, for example) just prior to slipping the gasket onto the spigot and assembling the joint.

Bolt Size *in.*	Range of Torque *ft-lb*	Length of Wrench—*in.**
$\frac{5}{8}$	40– 60	8
$\frac{3}{4}$	60– 90	10
1	70–100	12
$1\frac{1}{4}$	90–120	14

* The torque loads may be applied with torque-measuring or torque-indicating wrenches, which may also be used to check the application of approximate torque loads applied by men trained to give an average pull on a definite length of regular socket wrench.

For water and gas service, the normal range of bolt torques to be applied to standard cast-iron bolts in a joint and the lengths of wrenches, when used by the average man, that should satisfactorily produce the ranges of torques shown are given in the table at bottom of first column.

When tightening bolts, it is essential that the gland be brought up toward the pipe flange evenly, maintaining approximately the same distance between the gland and the face of the flange at all points around the socket. This may be done by partially tightening the bottom bolt first, then the top bolt, next the bolts at either side, and last, the remaining bolts. This cycle should be repeated until all bolts are within the range of torques shown in the table above. If effective sealing is not attained at the maximum torque indicated, the joint should be disassembled, thoroughly cleaned, and reassembled. Overstressing of bolts to compensate for poor installation practice is to be avoided.

axial loading. The specified test loads shall not break nut or bolt or permanently stretch the bolt. Permanent stretch is defined as 0.002 in. per inch of bolt length. Assembled bolts and nuts shall be tested at the following load values, which have been determined on the basis of a 45,000-psi stress at the root of the thread:

Bolt Diameter *in.*	Load *lb*
$\frac{5}{8}$	9,000
$\frac{3}{4}$	13,500
1	24,500
$1\frac{1}{4}$	40,000

11–6.4.3. *Workmanship.* Bolt shanks shall be straight within $\frac{1}{16}$ in. per 6 in. of length. The two load-bearing surfaces of the bolt heads shall be in a common plane that shall be at right angles to the bolt shank.

Bolts and nuts shall be sound, clean, and coated with a rust-resistant lubricant; their surfaces shall be free of objectionable protrusions that would interfere with their fit in the made-up mechanical joint.

11–6.4.4. *Packing.* The nuts shall be assembled on the bolts for packing. They shall be packed in suitable containers that shall be plainly marked with the manufacturer's name, and the size, quantity, and weight of the contents.

11–7—Special Requirements for the Push-on Joint

11–7.1. *Drawings.* The manufacturer shall furnish drawings of the joint and gasket, if requested by the purchaser.

11–7.2. *Dimensions and tolerances.* The dimensions of the bell, socket, and plain end shall be in accordance with the manufacturer's standard design dimensions and tolerances. Such dimensions shall be gaged at sufficiently frequent intervals to assure dimensional control and satisfactory joint assembly.

11–7.3. *Gaskets.* Gasket dimensions shall be in accordance with the manufacturer's standard design dimensions and tolerances. The gasket shall be of such size and shape as to provide an adequate compressive force against the spigot and socket after assembly to effect a positive seal under all combinations of joint and gasket tolerances. The trade name or trademark, size, mold number, gasket manufacturer's mark, and year of manufacture shall be molded in the rubber on the back of the gaskets.

Gaskets shall be vulcanized natural or vulcanized synthetic rubber. No reclaimed rubber shall be used. When two hardnesses of rubber are included in a gasket, the soft and hard portions shall be integrally molded and joined in a strong vulcanized bond. They shall be free of porous areas, foreign material, and visible defects.

The required properties of the gasket rubber and the required method of test are given in the following table:

Property	ASTM Test Method	Main Body of Gasket	Harder Portion (if used)
Hardness, Durometer "A"	D676–59T at 76°F ±6	45–70	78–90
Min. ultimate tensile—*psi*	D412–61T	2,000	1,200
Min. ultimate elongation—*per cent**	D412–61T	300	125
Min. aging—*per cent*†	D572–61‡	60	60

* Of original length.
† Of original values of tensile and ultimate elongation.
‡ Oxygen pressure method: after 96 hr at 70°C ±1° at 300 psi ±10.

The gasket manufacturer shall set up such quality control procedures as will insure the gaskets' meeting the requirements of this standard. He shall furnish a monthly report of rep-

UDC 621.774.1

ASA A21.11-1964
AWWA (C111-64)

Revision of
ASA A21.11-1953
(AWWA C111-53)

American Standard for

Rubber Gasket Joints for Cast-Iron Pressure Pipe and Fittings

Sec. 11–1—Scope

This standard covers 2-in. through 48-in. rubber-gasket joints of the following types for cast-iron pressure pipe and fittings:

11–1.1. *Mechanical joint.* The mechanical joint is designed for pipe and fittings conveying gas and water, sewage, or other liquids.

11–1.2. *Push-on joint.* The push-on joint is designed for pipe and fittings conveying water, sewage, or other liquids.

Sec. 11–2—Definitions

11–2.1. *Joints and accessories.* For the purpose of this standard the word "joint" includes accessories.

11–2.2. *Mechanical joint.* The mechanical joint is a bolted joint of the stuffing-box type, as shown in Fig. 11.1. Each joint shall consist of: (1) a bell, cast integrally with the pipe or fitting and provided with an exterior flange having cored or drilled bolt holes (slots, with the same width as the diameter of the bolt holes may be provided in the bell flange if such slots are necessary for the insertion of the bolts), and interior annular recesses for the sealing gasket and the plain end of the pipe or fitting; (2) a pipe or fitting plain end; (3) a sealing gasket; (4) a follower gland with cored or drilled bolt holes; and (5) tee-head bolts and hexagon nuts.

11–2.3. *Push-on-joint.* The push-on joint is a single rubber gasket joint designed to be assembled by the positioning of a continuous, molded, rubber ring gasket in an annular recess in the pipe or fitting socket and the forcing of the plain end of the entering pipe into the socket, thereby compressing the gasket radially to the pipe to form a positive seal. The gasket and the annular recess shall be so designed and shaped that the gasket is locked in place against displacement as the joint is assembled. Details of the joint design and assembly shall be in accordance with the joint manufacturer's standard practice.

11–2.4. *Purchaser.* The party entering into a contract or agreement to purchase joints according to this standard.

11–2.5. *Manufacturer.* The party entering into a contract or agreement to furnish joints according to this standard.

11–2.6. *Inspector.* The representative of the purchaser, authorized to inspect in behalf of the purchaser to determine whether the requirements of this standard have been met.

11–3—General Requirements

11–3.1. Joints made in conformance with the provisions of this standard are intended for use on cast-iron pipe and fittings made in accordance with the following standards, where applicable:

ASA A21.2–1953 (AWWA C102)—Cast-Iron Pit Cast Pipe for Water or Other Liquids

ASA A21.6–1962 (AWWA C106)—Cast-Iron Pipe Centrifugally Cast in Metal Molds, for Water or Other Liquids

ASA A21.7–1962—Cast-Iron Pipe Centrifugally Cast in Metal Molds, for Gas

ASA A21.8–1962 (AWWA C108)—Cast-Iron Pipe Centrifugally Cast in Sand-Lined Molds, for Water or Other Liquids

ASA A21.9–1962—Cast-Iron Pipe Centrifugally Cast in Sand-Lined Molds, for Gas

Federal Specification WW-P-421b—Pipe, Cast-Iron, Pressure (for Water and Other Liquids)

Federal Specification WW-P-360a—Pipe, Cast-Iron, Pressure (Gas and Water)

ASA A21.10–1964 (AWWA C110)—Cast-Iron Fittings, 2 in. Through 48 in., for Water and Other Liquids.

The joints shall have the same pressure rating as the pipe or fitting of which they are a part.

11–3.2. A recommended method of joint assembly shall be furnished by the manufacturer on request of the purchaser.

11–4—Inspection and Certification by Manufacturer

Inspection shall be made in accordance with the provisions of the standard under which the pipe or fittings are purchased.

The manufacturer shall, if required on the purchase order, furnish a sworn statement that the inspection and all of the tests specified have been made and that the results thereof comply with the requirements of this standard.

A record of the specified tests of glands, bolts, and gaskets shall be kept, or obtained from subcontractors, if these items are not made by the manufacturer. These records shall be retained for 1 year and shall be available to the purchaser at the foundry.

11–5—Inspection by Purchaser

If the purchaser wants to inspect the manufacture of glands, bolts, or gaskets that may be made by subcontractors, special arrangements therefor must be made at the time of placing the order.

11–6—Special Requirements for the Mechanical Joint

11–6.1. *Glands.* The acceptability of the iron used in the glands shall be determined by tests made on bars cast from the same iron as the glands. The test bars shall be ASTM standard bars, cast and tested in accordance with ASTM A48–62. At the option of the manufacturer, either the tension test or the transverse test may be used as the acceptance test. The required properties are given in the following table:

Class of Iron	Bar Diam. *in.*	Span *in.*	Min. Breaking Load—*lb* (*1,000's*)	Min. Tensile *psi* (*1,000's*)
25	1.2	18	2	25
25	2	24	6.8	25

Glands shall have a bituminous coating unless otherwise specified.

11–6.2. *Dimensions and tolerances.* The dimensions of the bell, socket, plain end, bolt holes, bolt circle, spacing of the bolt holes, and gland lip shall be gaged in accordance with Fig. 11.1 and Table 11.1 at sufficiently frequent intervals to assure dimensional control and satisfactory joint assembly.

11–6.3. *Gaskets.* Gasket dimensions shall conform to the dimensions and tolerances shown in Fig. 11.2 and Table 11.2. The size, mold number, gasket manufacturer's mark, and the year of manufacture shall be molded in the rubber on the back of the gasket as shown in Fig. 11.2.

Rubber gaskets shall be vulcanized natural or vulcanized synthetic rubber, free of porous areas, foreign materials, and visible defects. No reclaimed rubber shall be used.

The gasket manufacturer shall set up such quality control procedures as will ensure the gaskets' meeting the requirements of this standard. He shall furnish a monthly report of representative quality control test results to the manufacturer.

The required properties of the gasket rubber and the required methods of test are given in the following table:

Property	Test Method	Required Value
Hardness Durometer "A"	ASTM D676-59T at 76°F±6°	75±5
Min. ultimate tensile—*psi*	ASTM D412–61T	1,500
Min. ultimate elongation—*per cent**	ASTM D412–61T	150
Min. aging—*per cent*†	ASTM D572–61‡	60

* Of original length.
† Of original values for tensile and ultimate elongation.
‡ Oxygen pressure method, after 96 hr at 70°C ±1°, under 300 psi±10.

11–6.4. *Bolts and nuts.* Dimensions of tee-head bolts and hexagon nuts shall comply with the dimensions and tolerances shown in Fig. 11.3 and Table 11.3. At the manufacturer's option, they shall be made of either high-strength cast iron containing a minimum of 0.50 per cent copper, or high-strength, low-alloy steel with the characteristics shown in the following table:

Characteristic	Value
Min. yield strength—*psi*	45,000
Min. elongation in 2 in.—*per cent*	20
Max. content—*per cent*	
Carbon	0.20
Manganese	1.25
Sulfur	0.05
Min. content—*per cent*	
Nickel	0.25
Copper	0.20
Combined (Ni, Cu, Cr)	1.25

11–6.4.1. *Threads.* The design of internal and external threads shall conform to ASA B1.1–1960—Unified Screw Threads, and to B1.2–1951—Screw Thread Gages and Gaging. Thread form shall conform to the standards and to the dimensions of the coarse-thread series (UNC) Unified Coarse; external threads shall be made in compliance with Class 2A limits and internal threads shall be made in compliance with Class 2B limits. Bolts shall be threaded concentric to the longitudinal axis of the shank. Nuts shall be tapped concentric to the vertical axis and at right angles to the load surfaces within a tolerance of 2 deg to insure axial loading.

11–6.4.2. *Proof test.* The bolt manufacturer shall proof test samples of assembled bolts and nuts in tension to the load values designated. For testing, the nuts shall be assembled flush with the end of the bolts. The load shall be applied without impact between the nut and the bolt head in a suitable machine that will insure

ASA A21.12
(AWWA C112)

AMERICAN STANDARD FOR 2-IN. AND 2¼-IN. CAST-IRON PIPE, CENTRIFUGALLY CAST, FOR WATER OR OTHER LIQUIDS

ASA A21.12

UDC 621.774.1

ASA A21.12–1965
(AWWA C112–65)

AMERICAN STANDARD

for

2-in. AND $2\frac{1}{4}$-in. CAST-IRON PIPE, CENTRIFUGALLY CAST, FOR WATER OR OTHER LIQUIDS

PUBLISHED BY AMERICAN WATER WORKS ASSOCIATION, INC.

SPONSORS

American Gas Association
American Society for Testing and Materials
American Water Works Association
New England Water Works Association

Approved by American Standards Assn., May 10, 1965.

AMERICAN WATER WORKS ASSOCIATION
Incorporated
2 Park Avenue, New York, N.Y. 10016

2P—17M—12/65

Copyright © 1965 by the American Water Works Association, Inc.
Made in U.S.A.

TABLE 12–2

Nominal Laying Lengths, Thicknesses, and Weights

Nominal Laying Length *ft*	2-in. Pipe (Thickness, 0.25 in.* OD, 2.50 in.)		2½-in. Pipe (Thickness, 0.25 in.* OD, 2.75 in.)	
	Avg Wt. Per Foot† *lb*	Wt. Per Length† *lb*	Avg Wt. Per Foot† *lb*	Wt. Per Length† *lb*
Mechanical-Joint Pipe‡				
12	6.2	74	6.8	82
18	5.9	106	6.5	117
20	5.8	116	6.4	129
Push-on Joint Pipe				
12	6.2	74	6.8	82
18	5.9	106	6.5	117
20	5.8	115	6.4	128

* For thickness tolerances, see Sec. 12–7.2.
† Weight includes bell; a minus tolerance of 6 per cent is permitted (see Sec. 12–7.3).
‡ The combined weight of the gland, bolts, and gasket shall be 3.5 lb for 2-in. pipe and 4.0 lb for 2½-in. pipe.

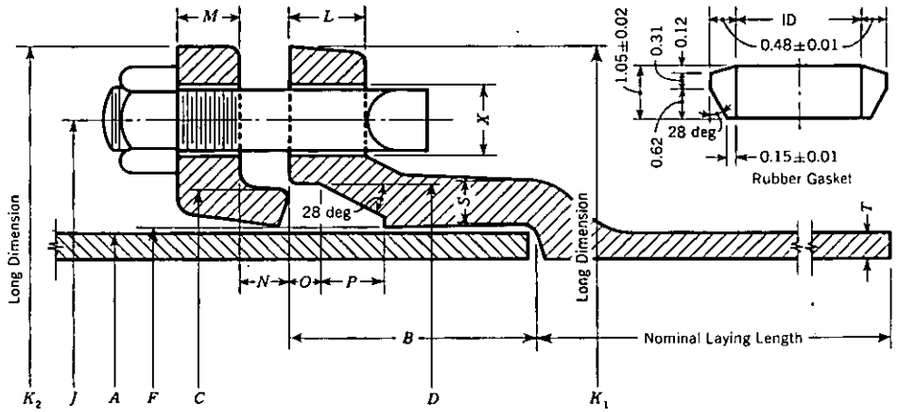

Fig. 12–1. Standard Mechanical-Joint Dimensions (see Table 12–1)

Note: For both 2- and 2½-in. pipe, two ⅝-in. bolts, 2½ in. in length, shall be provided. The inside diameter of the rubber gasket shall be: 2.48 in., with a plus and minus tolerance of 1 per cent, for 2-in. pipe; and 2.72 in., with a plus and minus tolerance of 1 per cent, for 2½ in. pipe.

The recorded deflection shall be that of the specimen only.

The modulus of rupture and the modulus of elasticity shall be determined by the following formulas:

$$\text{Modulus of Rupture} = \frac{40.74 \times W \times D_1}{D_1^4 - D_2^4}$$

$$\text{Modulus of Elasticity} = \frac{5{,}000\ W}{Y\ (D_1^4 - D_2^4)}$$

or

$$\frac{122.7 \times \text{M.R.}}{Y \times D_1}$$

in which W is the breaking load, in pounds; D_1 is the outside diameter of the pipe, in inches; D_2 is the inside diameter, in inches; and Y is the deflection, in inches.

The minimum modulus of rupture shall be 40,000 psi, at which the modulus of elasticity shall not exceed 12,000,000 psi. If the modulus of elasticity exceeds 12,000,000 psi, the modulus of rupture shall exceed 40,000 psi in at least the same proportion. If any test pipe fails to meet these requirements, a retest shall be made on two additional pipe cast in the same heat as the one that failed. Both pipe shall meet the prescribed test for that heat to be acceptable.

12–11.3. *Hardness test for pipe cast in metal molds.* After heat treatment, hardness determinations shall be made on the outside of the pipe. A sufficient number of pipe from each heat shall be tested to assure that the Rockwell hardness number (or its equivalent) does not exceed B-95 (Shore C32). Pipe may be heat treated again to meet this requirement.

Sec. 12–12—Foundry Records

The results of chemical analyses (Sec. 12–11.1) and physical tests (Sec. 12–11.2) shall be recorded and retained by the manufacturer for 1 year and shall be available to the purchaser at the foundry. If specified on the purchase order, written transcripts of the results of these tests shall be furnished.

Sec. 12–13—Rejection of Pipe

If the results of any routine chemical analysis or physical test fail to meet the requirements of Sec. 12–11, the pipe cast in that heat shall be rejected, except as provided in Sec. 12–14.

Sec. 12–14—Determining Rejection

The manufacturer may determine the amount of pipe to be rejected by making similar additional tests of pipe of the same size as that rejected until the rejected lot is bracketed in order of manufacture by an acceptable test at each end of the interval in question.

TABLE 12–1

Mechanical-Joint Dimensions

Detail in Fig. 12–1	2-in. Pipe (OD = 2.50 in.)		2½-in. Pipe (OD = 2.75 in.)	
	Dimension *in.*	Tolerance *in.*	Dimension *in.*	Tolerance *in.*
A	2.50	±0.05	2.75	±0.05
B	2.50	—	2.50	—
C	3.39	±0.05	3.64	±0.05
D	3.50	±0.05	3.75	±0.05
F	2.61	±0.05	2.86	±0.05
J	4.75	±0.05	5.00	±0.05
*K1**	6.00	−0.05	6.25	−0.05
*K2**	6.25	−0.10	6.50	−0.10
L	0.56	−0.05	0.56	−0.05
M	0.62	−0.05	0.62	−0.05
N	0.50	—	0.50	—
O	0.31	—	0.31	—
P	0.63	—	0.63	—
S	0.37	−0.05	0.37	−0.05
X†	0.75	+0.06 −0.00	0.75	+0.06 −0.00

* Gland and bell flange may be oval shaped.
† If bolt holes are cored, an additional 0.06-in. tolerance may be permitted for taper.

AMERICAN STANDARD

An American Standard implies a consensus of those substantially concerned with its scope and provisions. The consensus principle extends to the initiation of work under the procedure of the Association, to the method of work to be followed, and to the final approval of the standard.

An American Standard is intended as a guide to aid the manufacturer, the consumer, and the general public. The existence of an American Standard does not in any respect preclude any party who has approved of the standard from manufacturing, selling, or using products, processes, or procedures not conforming to the standard.

An American Standard defines a product, process, or procedure with reference to one or more of the following: nomenclature, composition, construction, dimensions, tolerances, safety, operating characteristics, performance, quality, rating, certification, testing, and the service for which designed.

American Standards are subject to periodic review. They are reaffirmed or revised to meet changing economic conditions and technological progress. Users of American Standards are cautioned to secure the latest editions.

Producers of goods made in conformity with an American Standard are encouraged to state on their own responsibility in advertising, promotion material, or on tags or labels, that the goods are produced in conformity with particular American Standards. The inclusion in such advertising and promotion media, or on tags or labels, of information concerning the characteristics covered by the standard to define its scope is also encouraged.

FOREWORD

This foreword is not a part of ASA A21.12 (AWWA C112) but is provided for information only.

ASA Sectional Committee A21 on Cast-Iron Pipe and Fittings was organized in 1926, under the sponsorship of A.G.A., ASTM, AWWA, and NEWWA. The scope of the committee's activity was defined as follows:

Unification of specifications for cast-iron pipe, including materials, dimensions, pressure ratings, methods of manufacture (including such new developments as centrifugal casting) insofar as they may be necessary to secure satisfactory specifications, eliminations of unnecessary sizes and varieties, consideration of the possibility of developing a coordinated scheme of metallic pipe and fittings applicable to all common mediums, and methods of making up joints insofar as they are determining as to the dimensional design of cast-iron pipe.

The types of cast-iron pipe to include bell and spigot pipe, flanged pipe, flanged and bell mouth fittings and wall castings, pipe elbows, tees, wyes, return bends, and other fittings not now included in standard lists; cast-iron pipe threaded for flanges or couplings. The standardization is not to include methods of installing pipe and similar matters, except as to the making up of joints in its relationship to the dimensional standardization of pipe and fittings, as noted above.

In 1958, Sectional Committee A21 was reorganized and subcommittees were established to study each group of standards in accordance with the review and revision policy of ASA. Subcommittee 1—Pipe, was organized with the following scope:

The scope of the committee activity shall include an examination of all present A21 standards for pipe to determine what is needed to bring these up to date. The examination shall include A21.1, A21.2, A21.3, A21.6, A21.7, A21.8, A21.9, as well as any other matters pertaining to pipe standards.

Until the promulgation of ASA A21.12 (AWWA C112), existing American Standards for cast-iron water pipe covered only sizes 3 in. and larger, although 2-in. and 2½-in. pipe had been used extensively by water utilities for a number of years. Both sizes had been purchased in accordance with manufacturers' standards or, since 1959, in accordance with Federal Specification WW-P-360a.

Under ASA A21.12 (AWWA C112), weights of pipe are controlled by weighing the hot pipe immediately after casting or by weighing finished sections individually or in bundles. Marking of weights on the pipe is not required because of the weighing procedure and because the area on which to show the weight is limited.

12–8.2. *Cement-mortar linings.* Cement linings shall be in accordance with ASA A21.4 (AWWA C104) of latest revision. The thickness of the linings shall be not less than $\frac{1}{16}$ in. with a plus tolerance of $\frac{1}{8}$ in. Cement linings are recommended for most waters and, if desired, shall be specified in the invitation for bids and on the purchase order.

12–8.3. *Bituminous inside coating.* The inside coating for pipe not cement lined shall be a bituminous material similar to the standard outside coating, as thick as practicable, at least 1 mil thick. The coating, after drying 48 hr, shall impart no objectionable color, odor, or taste to water in contact with the coating for a minimum of 48 hr. The bituminous inside coating shall be applied to the inside surface of all pipe unless otherwise specified. Experience has indicated that such coating is not complete protection against loss in pipe capacity due to tuberculation.

12–8.4. *Special coatings and linings.* For special conditions, other types of coatings and linings may be available. Such special coatings and linings shall be specified in the invitation for bids and on the purchase order.

Sec. 12–9—Hydrostatic Test

Each pipe shall be subjected to a hydrostatic proof test of not less than 500 psi. The test may be made either before or after the standard outside coating and bituminous inside coating have been applied, but it shall be made *before* the application of cement-mortar lining or of a special lining. The pipe may be retested, at the manufacturer's option, after application of a cement-mortar or other special lining.

Each pipe shall be subjected to the full 500-psi test pressure for at least 10 sec. Suitable controls and recording devices shall be used to ascertain the test pressure and duration of test. Any pipe that leaks or otherwise fails to withstand the test pressure shall be rejected.

Sec. 12–10—Marking of Pipe

The manufacturer's mark and the year in which the pipe was produced shall be cast or stamped on or near the bell of each pipe.

Sec. 12–11—Acceptance Tests

The following acceptance tests shall be made and recorded:

12–11.1. *Chemical analyses.* Analyses of the iron shall be made at sufficiently frequent intervals during each heat to insure compliance with the following limits: maximum phosphorus content, 0.90 per cent; maximum sulfur content, 0.12 per cent. Control of other chemical constituents shall be maintained to meet the physical requirements set forth in Sec. 12–11.2 and 12–11.3 below. Samples for chemical analysis shall be representative and shall be obtained by drilling either acceptance test specimens or specimens specially cast for the purpose.

12–11.2. *Physical tests.* One pipe from each heat of 3 hr or more shall be selected for a beam test. A sample approximately 3 ft long shall be mounted in a testing machine on metal supports 24 in. apart and shall be loaded by means of two metal bearing pieces at points 8 in. from the supports. The radii of the bearing surfaces of the supports and the loading pieces shall be at least 1 in. The breaking load and the deflection at the midpoint shall be accurately measured.

12–3.2. *Laying lengths.* The nominal laying length of the pipe shall be as shown in Table 12–2. A maximum of 10 per cent of the total number of pipe of each size in the order may be furnished as much as 24 in. shorter than the nominal laying length. An additional 10 per cent may be furnished as much as 3 in. shorter than the nominal laying length.

Sec. 12–4—Inspection and Certification by Manufacturer

12–4.1. The manufacturer shall establish the necessary quality control and inspection practice to assure compliance with this standard.

12–4.2. The manufacturer shall, if required on the purchase order, furnish a sworn statement that the inspection and all of the specified tests have been made and that the results comply with the requirements of this standard.

Sec. 12–5—Inspection by Purchaser

12–5.1. If the purchaser desires to inspect pipe at the manufacturer's plant, he shall so specify on the purchase order, stating the conditions (such as time, and extent of inspection) under which the inspection shall be made.

12–5.2. The inspector shall have free access to those parts of the manufacturer's plant which are necessary to assure compliance with this standard. The manufacturer shall make available for the inspector's use such gages as are necessary for inspection. The manufacturer shall provide the inspector with such handling assistance as is necessary.

Sec. 12–6—Delivery and Acceptance

All pipe and accessories shall comply with this standard. Pipe and accessories not complying with this standard shall be replaced by the manufacturer at the agreed point of delivery. The manufacturer shall not be liable for shortages or damaged pipe after acceptance at the agreed point of delivery, except as recorded on the delivery receipt or similar document by the carrier's agent.

Sec. 12–7—Tolerances or Permissible Variations

12–7.1. *Dimensions.* Pipe and accessories shall be gaged, in accordance with the tables shown in this standard, at sufficiently frequent intervals to assure dimensional control. The inside of sockets and outside of spigot ends shall be tested with circular gages.

12–7.2. *Thickness.* Tolerances below the standard thicknesses of pipe and bell shall not be more than those shown below:

Size *in.*	Minus Tolerance *in.*
2	0.05
2½	0.05

An additional tolerance of 0.02 in. shall be permitted over areas not exceeding 2 in. in any direction.

12–7.3. *Weight.* No pipe shall be underweight by more than 6 per cent of the nominal weight given in Table 12–2. It is not required that the weight be marked on each individual pipe.

Sec. 12–8—Coatings and Linings

12–8.1. *Standard outside coating.* The standard outside coating for general use under all normal conditions shall be a bituminous coating of either coal-tar or asphalt base approximately 1 mil thick. The standard coating shall be applied to the outside of all pipe unless otherwise specified. The finished coating shall be continuous, smooth, neither brittle when cold nor sticky when exposed to the sun, and strongly adherent to the pipe.

Options

This standard includes certain options which, if desired, must be specified in the invitation for bids and on the purchase order. Also, a number of items must be specified to describe completely the pipe required. The following summarizes these details and available options, and lists the sections of the standard where they can be found:

Pipe Detail and Option	*References*
1. Size, joint type, and laying length	Tables
2. Special joints	Sec. 12–3.1
3. Certification by manufacturer	Sec. 12–4
4. Inspection by purchaser	Sec. 12–5
5. Cement lining, special coatings and linings	Sec. 12–8
6. Written transcripts of foundry records	Sec. 12–12

Committee Personnel

Subcommittee 1—Pipe, which developed this standard, had the following personnel at that time:

Chairman: J. Thompson Vann

Vice-Chairman: Edwin B. Cobb

User Members	*Producer Members*
Frank E. Dolson	Carl A. Henrikson
Harry P. Hagedorn	Arthur Roberts Jr.
Richmond C. Holcombe	Charles C. Salvage
Rolf H. Jensen	Sidney P. Teague
Robert C. Kauffman	
George F. Keenan	
Loring E. Tabor	
William J. Towner	

Sectional Committee A21 on Cast-Iron Pipe and Fittings, which reviewed and approved this standard, had the following personnel at the time of approval:

Chairman: EDWIN B. COBB

Vice-Chairman: HERBERT W. STUART

Secretary: JAMES B. RAMSEY

Organizations Represented	*Representatives*
American Gas Association	RICHMOND C. HOLCOMBE
American Society of Civil Engineers	KENNETH W. HENDERSON
American Society of Mechanical Engineers	LOUIS R. HOWSON
American Society for Testing & Materials	HARRY P. HAGEDORN
American Water Works Association	VANCE C. LISCHER
Cast Iron Pipe Research Association	WALLACE T. MILLER HERBERT W. STUART J. THOMPSON VANN
Individual Producers	RICHARD T. VERHALEN WILLIAM T. MAHER
Manufacturers' Standardization Society of the Valve and Fittings Industry	EMIL J. BARTHOLET
New England Water Works Association	EDWIN B. COBB
Standardization Division—General Services Administration	ROBERT E. LYONS
Member at Large	ROLF H. JENSEN
Canadian Standards Association	ROBERT C. SHNAY *

* Liaison representative.

CONTENTS

SECTION	PAGE
12-1—Scope	1
12-2—Definitions	1
12-3—General Requirements	1
12-4—Inspection and Certification by Manufacturer	2
12-5—Inspection by Purchaser	2
12-6—Delivery and Acceptance	2
12-7—Tolerances or Permissible Variations	2
12-8—Coatings and Linings	2
12-9—Hydrostatic Test	3
12-10—Marking of Pipe	3
12-11—Acceptance Tests	3
12-12—Foundry Records	4
12-13—Rejection of Pipe	4
12-14—Determining Rejection	4

UDC 621.774.1

ASA A21.12-1965
(AWWA C112-65)

AMERICAN STANDARD

for

2-in. AND 2¼-in. CAST-IRON PIPE, CENTRIFUGALLY CAST, FOR WATER OR OTHER LIQUIDS

Sec. 12-1—Scope

This standard covers 2-in. and 2¼-in. cast-iron pipe, centrifugally cast in metal molds or sand-lined molds, for water or other liquids at a working pressure of 250 psi. Characteristics of such pipe with mechanical joints and push-on joints are given in Tables 12-1 and 12-2. This standard may be used for pipe with such other types of joints as may be agreed upon at the time of purchase.

Sec. 12-2—Definitions

Under this standard the following definitions shall apply:

12-2.1. *Purchaser.* The party entering into a contract or agreement to purchase pipe according to this standard

12-2.2. *Manufacturer.* The party that produces the pipe purchased under this standard

12-2.3. *Inspector.* The representative of the purchaser, authorized to inspect in behalf of the purchaser to determine whether the pipe meets this standard

12-2.4. *Heat.* The period during which pipe are cast and the melting unit is operated continuously.

12-2.5. *Mechanical joint.* The mechanical joint is a bolted joint of the stuffing-box type, as shown in Table 12-1 and Fig. 12-1.

12-2.6. *Push-on joint.* The push-on joint is a single rubber gasket joint and is designed for assembly by positioning a continuous molded rubber ring gasket in an annular recess in the socket of the pipe and forcing the plain end of the entering pipe into the socket, thereby compressing the gasket radially to the pipe to form a positive seal. The design and shape of the gasket and the annular recess shall be such that the gasket is locked in place against displacement as the joint is assembled. Details of the joint design shall be in accordance with the manufacturer's standard practice.

Sec. 12-3—General Requirements

12-3.1. *Dimensions and weights.* Pipe with mechanical joints or push-on joints shall conform to the dimensions and weights shown in Tables 12-1 and 12-2 of this standard. The pipe shall also conform to the applicable requirements of ASA A21.11 (AWWA C111) of latest revision. Pipe with other types of joints shall comply with the joint dimensions and weights agreed on at the time of purchase but in all other respects shall fulfill the requirements of this standard.

ASA A21.50
(AWWA H3)

AMERICAN STANDARD FOR THE THICKNESS DESIGN OF DUCTILE-IRON PIPE

ASA A21.50

MANUFACTURERS' PROPOSED ADDENDUM TO AMERICAN STANDARD A21.50-1965, "THICKNESS DESIGN OF DUCTILE - IRON PIPE."

54-IN. PIPE

This proposed Addendum to American Standard A21.50—1965 "Thickness Design of Ductile-Iron Pipe" 54-in. Pipe.

Approved as USA Standard December 19, 1968.

MANUFACTURERS' PROPOSED ADDENDUM TO AMERICAN STANDARD A21.50-1965, "THICKNESS DESIGN OF DUCTILE - IRON PIPE."

54-IN. PIPE

ADDENDUM TO TABLE 1
"Earth Loads (W_e) and Truck Superloads (W_t)":

Size in.	Outside Diameter (D) in.	Earth Load	Truck Load	Earth Load	Truck Load	Earth Load	Truck Load	Earth Load	Truck Load
		Lb/Lin. Ft.							
		2.5-ft. Cover		3.5-ft. Cover		5-ft. Cover		8-ft. Cover	
54	57.10	1428	2635	1998	2052	2855	1526	4568	899
		12-ft. Cover		16-ft. Cover		20-ft. Cover		24-ft. Cover	
54	57.10	6852	594	9136	378	11420	256	13704	189

ADDENDUM TO TABLE 3
"Allowances for casting tolerance"

Size in.	Casting Tolerance in.
54	0.09

ADDENDUM TO TABLE 4
"Total Calculated Thicknesses of Ductile-Iron Water Pipe for Standard Working Pressures and Depths of Cover*":

Pipe Size in.	Laying Condition†	Rated Working Pressure, psi	Depth of Cover—ft.							
			2.5	3.5	5	8	12	16	20	24
			Thickness—in.‡							
54	A	200	0.69	0.69	0.73	0.82	0.95	1.08	1.19	1.29
	A	250	0.77	0.77	0.77	0.82	0.95	1.08	1.19	1.29
	A	300	0.85	0.85	0.85	0.85	0.95	1.08	1.19	1.29
	A	350	0.94	0.94	0.94	0.94	0.95	1.08	1.19	1.29
54	B	150	0.64	0.64	0.66	0.76	0.90	1.03	1.15	1.25
	B	200	0.68	0.68	0.68	0.76	0.90	1.03	1.15	1.25
	B	250	0.77	0.77	0.77	0.77	0.90	1.03	1.15	1.25
	B	300	0.85	0.85	0.85	0.85	0.90	1.03	1.15	1.25
	B	350	0.94	0.94	0.94	0.94	0.94	1.03	1.15	1.25

*Total calculated thicknesses include corrosion allowance and casting tolerances added to net thicknesses. Truck superloads and 100-psi surge pressure allowance were used in calculating the net thicknesses. The total calculated thicknesses are used to select the nearest standard class thickness as shown in Table 6 (see Sec. 50-2.4).

†A: flat-bottom trench, without blocks, untamped backfill; B: flat-bottom trench, without blocks, tamped backfill.

‡The total calculated thicknesses shown in this table do not always increase with depth of cover, as the effect of truck loading is greater at the shallower depths.

ADDENDUM TO TABLE 6
"Standard Thickness Classes of Ductile-Iron Pipe":

Size in.	Thickness Class					
	1	2	3	4	5	6
	Thickness—in.					
54	0.65	0.73	0.81	0.89	0.97	1.05

minimum manufacturing thickness from Sec. 50–2.3b:

$$\Delta x = \frac{K_x W_c}{\frac{8Et_1^3}{d^3} + 0.732E'}, \qquad (7)$$

in which Δx is deflection in inches (decrease of vertical diameter or increase of horizontal diameter, which are essentially equal under trench loading) and t_1 is minimum manufacturing thickness in inches ($t + 0.08$ in.), and other terms are as defined for Eq 6.

For the example given in Sec. 50–3 the calculated deflection is 0.394 in., which is 1.53 per cent deflection.

2P—17M—12/65

UDC 621.774.1

ASA A21.50–1965
(AWWA H3–65)

American Standard

for the

THICKNESS DESIGN OF DUCTILE-IRON PIPE

PUBLISHED BY AMERICAN WATER WORKS ASSOCIATION, INC.

SPONSORS

American Gas Association
American Society for Testing and Materials
American Water Works Association
New England Water Works Association

Approved by American Standards Association May 10, 1965.

© 1965 by the American Water Works Association, Inc.,
as part of the August 1965 JOURNAL American Water Works Association
Made in USA

AMERICAN WATER WORKS ASSOCIATION
Incorporated
2 Park Avenue, New York, N.Y. 10016

AMERICAN STANDARD

An American Standard implies a consensus of those substantially concerned with its scope and provisions. The consensus principle extends to the initiation of work under the procedure of the American Standards Association, to the method of work to be followed, and to the final approval of the standard.

An American Standard is intended as a guide to aid the manufacturer, the consumer, and the general public. The existence of an American Standard does not in any respect preclude any party who has approved of the standard from manufacturing, selling, or using products, processes, or procedures not conforming to the standard.

An American Standard defines a product, process, or procedure with reference to one or more of the following: nomenclature, composition, construction, dimensions, tolerances, safety, operating characteristics, performance, quality, rating, certification, testing, and the service for which designed.

American Standards are subject to periodic review. They are reaffirmed or revised to meet changing economic conditions and technologic progress. Users of American Standards are cautioned to secure the latest editions.

Producers of goods made in conformity with an American Standard are encouraged to state on their own responsibility in advertising, promotion material, or on tags or labels, that the goods are produced in conformity with particular American Standards. The inclusion in such advertising and promotion media, or on tags or labels, of information concerning the characteristics covered by the standard to define its scope is also encouraged.

FOREWORD

This foreword is provided for information only and is not a part of ASA A21.50 (AWWA H3).

In 1926, ASA Sectional Committee A21 on Cast-Iron Pipe and Fittings was organized, under the sponsorship of A.G.A., ASTM, AWWA, and NEWWA. The scope of the committee's activity was defined as follows:

Unification of specifications for cast-iron pipe, including materials, dimensions, pressure ratings, methods of manufacture (including such new developments as centrifugal casting) insofar as they may be necessary to secure satisfactory specifications, elimination of unnecessary sizes and varieties, consideration of the possibility of developing a coordinated scheme of metallic pipe and fittings applicable to all common mediums, and methods of making up joints insofar as they are determining as to the dimensional design of cast-iron pipe.

The types of cast-iron pipe [are] to include bell and spigot pipe, flanged pipe, flanged and bell-mouth fittings and wall castings, pipe elbows, tees, wyes, return bends, and other fittings not now included in standard lists; cast-iron pipe threaded for flanges or couplings. The standardization is not to include methods of installing pipe and similar matters, except as to the making up of joints in its relationship to the dimensional standardization of pipe and fittings, as noted above.

Prism:

$$W_e = HwB_e. \quad (5)$$

Symbols in these equations are explained in Table 7.

a. For 3-in. through 8-in. pipe, the earth load is computed by Marston's method for a trench width equal to nominal pipe diameter plus 2 ft, using Eq 2 or 3, whichever gives the smaller load.

b. For 10-in. through 16-in. pipe, the earth load is computed by Eq 4, prorating between the Marston load for 8-in. pipe, described above, and the prism load for 18-in. pipe, described below.

c. For 18-in. and larger pipe, the earth load is the weight of the prism of soil directly above the pipe computed by Eq 5.

50–4.2. *Truck superloads* (W_t): The truck superloads shown in Table 1 are computed by the procedure in Sec. 1–10 of ASA A21.1 (AWWA H1) for two passing trucks with adjacent wheels 3 ft apart and with 9,000 lb on each rear wheel. To the load thus obtained, 50 per cent is added for impact of the trucks moving over a roadway assumed to be unpaved and rough.

50–4.3. *Net thickness required for trench load:* The net design thickness required for trench load is determined from Table 2. The trench load–diameter ratios $\left(\frac{W_c}{D}\right)$ for various $\frac{D}{t}$ ratios shown in Table 2 were computed from Eq 6, which is the formula for the bending stress at the bottom of the pipe:

$$f = \frac{W_c d}{4t^2}\left[K_b - \left(\frac{K_x}{\frac{8Et^3}{E'd^3} + 0.732}\right)\right]. \quad (6)$$

In Eq 6,

f is design bending stress at bottom of pipe (36,000 psi).

W_c is trench load in pounds per linear foot of pipe (earth load plus truck superload).

d is mean diameter of pipe in inches $(D - t)$.*

D is outside diameter of pipe in inches.*

t is net thickness of pipe in inches.

E is modulus of elasticity of pipe metal (24,000,000 psi).

E' is modulus of soil reaction in pounds per square inch (from Table 8).

K_b is bending moment coefficient dependent on bedding angle (from Table 8).

K_x is deflection coefficient dependent on bedding angle (from Table 8).

Tables similar to Table 2 may be compiled for laying conditions other than A or B by assuming a series of diameters and thicknesses and calculating the matching trench loads using Eq 6 with values of K_b, K_x, and E' appropriate to the bedding and backfill conditions.

Sec. 50–5—Optional Calculation of Pipe Deflection

The maximum strain in cement linings is limited to a uniform safe value by the 36,000-psi design bending stress. Deflections calculated for 3-in. through 48-in. pipe with thicknesses designed by the above procedure for standard conditions do not exceed 2 per cent of the outside diameter of the pipe, which is well below the deflection that might damage the cement linings. Therefore, it is not usually necessary to calculate deflection as part of the design procedure. If it is desired to calculate the deflection, Eq 7 is used with the

* *See* Note in Sec. 50–2.1.

cover for a working pressure of 150 psi.

50–3.1—*Step 1—Design for Trench Load for Water or Gas Pipe:*

Earth load from Table 1 = 1,290 lb/lin ft
Truck load from Table 1 = 769 lb/lin ft

Trench load, W_e = 2,059 lb/lin ft.

Divide trench load by outside diameter of pipe:

$$\frac{W_e}{D} = \frac{2{,}059}{25.80} = 80 \text{ lb/ft/in.}$$

Find $\frac{W_e}{D}$ = 80 in Table 2 for Laying Condition B, and read the required

TABLE 8

Design Values of the Bedding Coefficients and Modulus of Soil Reaction

Item	Laying Condition	
	A	B
Bedding	flat bottom	flat bottom
Backfill	untamped	tamped
Bedding angle—*deg*	30	30
K_b	0.235	0.235
K_x	0.108	0.108
E'—*psi*	150	300

value of the diameter-thickness ratio, $\frac{D}{t}$ = 112.

Divide this ratio into the outside diameter of the pipe to obtain net thickness:

$$t = \frac{25.80}{112} = 0.23 \text{ in.}$$

50–3.2—*Step 2—Design for Internal Pressure:*

a. *Water pipe:*

Working pressure = 150 psi
Surge pressure = 100 psi

Design pressure = 250 psi.

Then,

$$t = \frac{250 \times 25.80}{2 \times 16{,}800} = 0.19 \text{ in.}$$

b. *Gas pipe:*

Working pressure = 150 psi.

Then,

$$t = \frac{150 \times 25.80}{2 \times 16{,}800} = 0.12 \text{ in.}$$

50–3.3. *Step 3—Selection of net thickness and addition of allowances:* The larger of the thicknesses is given by the design for trench load, Step 1, and therefore 0.23 in. is selected as the net thickness for water or gas pipe.

Net thickness = 0.23 in.
Corrosion allowance = 0.08 in.

Minimum manufacturing thickness = 0.31 in.
Casting tolerance = 0.07 in.

Total calculated thickness = 0.38 in.

50–3.4. *Step 4—Selection of standard thickness:* The total calculated thickness of 0.38 in. is less than the smallest standard thickness shown in Table 6. Therefore, the smallest standard thickness, 0.41 in., Class 1, is selected for specifying and ordering either water or gas pipe.

Sec. 50–4—Design Theory

This section illustrates determination of earth load (W_e), truck superload (W_t), and net thickness required for trench load (W_c) (*see* Sec. 50–2.1).

50–4.1. *Earth loads* (W_e): The earth loads shown in Table 1 are computed by Eq 2, 3, 4, and 5 below:

Marston, projection condition:

$$W_e = C_c w B_c^2 \qquad (2)$$

Marston, ditch condition:

$$W_e = C_d w B_d^2 \qquad (3)$$

Prorated between Marston and prism:

$$W_e = W_8 + 0.1(N - 8)(W_{18} - W_8) \qquad (4)$$

In 1958, Sectional Committee A21 was reorganized and subcommittees were established to study each group of standards in accordance with the review and revision policy of ASA.

Subcommittee 1—Pipe, was organized with the following scope:

The scope of the committee activity shall include an examination of all present A21 standards for pipe to determine what is needed to bring these up to date. The examination shall include A21.1, A21.2, A21.3, A21.6, A21.7, A21.8, A21.9, as well as any other matters pertaining to pipe standards.

The subcommittee, operating within this scope, submitted a proposed standard for the thickness design of ductile-iron pipe to Sectional Committee A21 in 1964.

The method of thickness design of ductile-iron pipe presented in ASA A21.50 (AWWA H3) is based on flexible-pipe principles developed at Iowa State College by M. G. Spangler and his associates.[1-4] The principal characteristics that distinguish flexible pipe from more rigid types of pipe are as follows:

1. In a flexible pipe the bending stress from trench load is reduced by the lateral soil reaction that is developed as the pipe deflects under the trench load and pushes outward against the sidefill soil.

2. A flexible pipe, initially deflected by trench load, is partially rerounded by internal pressure, and the bending stress of trench load is thus reduced.

3. A flexible pipe is usually required to carry less earth load than a more rigid pipe, because the flexible pipe, in deflecting under the earth load, transfers a significant part of the load to the sidefill soil columns.

These characteristics were expressed mathematically by Spangler in equations [1-5] from which may be calculated the earth loads on flexible pipe and the bending stresses and deflections of flexible pipe when subjected to: (1) external trench load and no internal pressure and (2) external trench load in combination with internal pressure. These equations are applicable to pipe made of various elastic metals, of which ductile iron is one.

During the development of the design procedures in this standard a thorough investigation was carried out to establish conservative design criteria, metal stresses,[6] and soil mechanics factors for use in applying the Spangler equations to the design of ductile-iron pipe. This investigation included the following studies: ring-bending tests on a large number of ductile-iron pipe; a review of the literature [1-5] on the structural behavior of ductile-iron pipe and other flexible pipe; and numerous calculations of pipe thicknesses, stresses, and deflections for various design criteria and loading conditions. From this investigation the design criteria and factors used in this standard were established as described below.

1. *Design criterion for external trench load.* The appropriate criterion for design of ductile-iron pipe against external load is the bending stress developed at the pipe invert (Eq 6 in the standard). This approach provides a uniform stress level in contrast to a design based on a uniform percentage deflection.

which results in wide variations in stress and can result in undesirably high bending stresses. The standard provides a formula (Eq 7) for supplementary calculation of deflection, if desired. Numerous calculations have shown, however, that the deflection of 3-in. through 48-in. pipe designed for bending stress according to the procedure in the standard will not exceed 2 per cent of the outside diameter of the pipe, a deflection at which the cement linings will not be damaged. Cement linings are not used for gas pipe.

2. *Design bending stress.* Results of a large number of ring-bending tests of ductile-iron pipe [6] of various sizes and thicknesses showed that a design bending stress of 36,000 psi is appropriate and conservative. These tests have shown this stress to be approximately 50 per cent of the minimum and approximately 43 per cent of the average ring yield strength of pipe that met the tensile and impact properties specified in the ductile-iron pipe standards ASA A21.51 (AWWA C151) and ASA A21.52.

3. *Trench factors.* The design equation for bending stress (Eq 6) contains the modulus of soil reaction and coefficients determined by the bedding angle, all of which are governed by the laying condition. The bedding angle is the angle subtended by the pipe surface that carries the load reaction at the bottom of the trench. In Laying Conditions A and B, pipe are laid on flat-bottom trench without special bedding material. For this type of trench a design value of 30 deg bedding angle is recommended in the literature,[4] and field tests of ductile-iron pipe [5] show that this is a conservative value. The modulus of soil reaction is governed by the type of materials used for backfill and degree of compaction of the backfill at the sides of the pipe. In five installations with untamped backfill,[1] the modulus of soil reaction averaged 308 psi, with a minimum of 234 psi. In field tests of ductile-iron pipe with untamped backfill,[5] the modulus averaged 165 psi, with a minimum of 151 psi. From these tests a design value of 150 psi was established for untamped backfill (Laying Condition A). In five installations with tamped backfill,[1] the modulus of soil reaction averaged 765 psi, with a minimum of 502 psi. In five installations with sand backfill,[1] which is sometimes used as an alternate to tamped-native-earth backfill, the modulus averaged 734 psi, with a minimum of 350 psi. From these tests a design value of 300 psi was established for tamped backfill (Laying Condition B). This design value is intended for application with the normal procedures that have been used for many years to install cast-iron pipe in Laying Condition B. This design value does not impose any requirement for special control of the backfill compaction.

4. *Application of the Spangler equations to small-diameter and thick-wall pipe.* The design equation (Eq 6) for bending stress, which incorporates the effect of lateral soil support, applies to the full range of sizes and thicknesses available in ductile-iron pipe. For pipe with small diameter-thickness ratios, the effect of sidefill soil support in this equation is relatively small. For pipe with larger ratios of diameter to thickness the effect of lateral support in the equation is correspondingly larger.

5. *Separate stress design.* Because of partial rerounding by the internal pressure, the total stress in the pipe wall at the design pressure is less than the

TABLE 6

Standard Thickness Classes of Ductile-Iron Pipe

Size *in.*	Thickness Class 1	2	3	4	5	6
	Thickness—*in.*					
3		0.28	0.31	0.34	0.37	0.40
4		0.29	0.32	0.35	0.38	0.41
6		0.31	0.34	0.37	0.40	0.43
8		0.33	0.36	0.39	0.42	0.45
10		0.35	0.38	0.41	0.44	0.47
12		0.37	0.40	0.43	0.46	0.49
14	0.36	0.39	0.42	0.45	0.48	0.51
16	0.37	0.40	0.43	0.46	0.49	0.52
18	0.38	0.41	0.44	0.47	0.50	0.53
20	0.39	0.42	0.45	0.48	0.51	0.54
24	0.41	0.44	0.47	0.50	0.53	0.56
30	0.43	0.47	0.51	0.55	0.59	0.63
36	0.48	0.53	0.58	0.63	0.68	0.73
42	0.53	0.59	0.65	0.71	0.77	0.83
48	0.58	0.65	0.72	0.79	0.86	0.93

TABLE 7

Explanation of Symbols for Earth Load formulas in Sec. 50–4.1

W_e = earth load in pounds per linear foot of pipe
B_e = outside diameter of pipe in feet
B_d = width of trench at top of pipe in feet (nominal pipe diameter plus 2 ft)
H = depth of cover to top of pipe in feet
w = unit weight of backfill soil, 120 lb/cu ft
C_e = $1.961 \frac{H}{B_e} - 0.934$ (This is a reduced form of the general equation for C_e and applies when r_sp, the product of the settlement and projection ratios, is equal to 0.75 and $K\mu$, the product of Rankine's lateral pressure ratio and the coefficient of internal friction of the backfill, is equal to 0.1924.)
C_d = $\frac{1 - e^{-2K\mu'\frac{H}{B_d}}}{2K\mu'}$
$K\mu'$ = product of Rankine's lateral pressure ratio and the coefficient of friction between the backfill and the trench walls, 0.130 (ordinary maximum for clay)
e = base of natural logarithms, 2.71828
W_8 = earth load for 8-in. pipe in pounds per linear foot
W_{18} = earth load for 18-in. pipe in pounds per linear foot
N = nominal pipe size in inches

TABLE 5

*Total Calculated Thicknesses of Ductile-Iron Gas Pipe for Standard Working Pressures and Depths of Cover**

Pipe Size *in.*	Laying Condition†	Rated Working Pressure *psi*	Depth of Cover—*ft*							
			2.5	3.5	5	8	12	16	20	24
			Thickness—*in.*‡							
3	A	250	0.17	0.17	0.18	0.19	0.21	0.22	0.23	0.24
	B	250	0.17	0.17	0.18	0.19	0.20	0.22	0.23	0.24
4	A	250	0.19	0.19	0.19	0.21	0.22	0.24	0.25	0.26
	B	250	0.18	0.18	0.19	0.20	0.22	0.24	0.25	0.26
6	A	250	0.22	0.22	0.22	0.24	0.27	0.29	0.30	0.30
	B	250	0.22	0.21	0.22	0.24	0.26	0.28	0.30	0.30
8	A	250	0.25	0.25	0.25	0.27	0.30	0.32	0.33	0.34
	B	250	0.25	0.24	0.24	0.27	0.30	0.32	0.33	0.34
10	A	250	0.29	0.28	0.28	0.30	0.33	0.36	0.37	0.38
	B	250	0.28	0.27	0.27	0.29	0.33	0.35	0.37	0.38
12	A	250	0.31	0.30	0.30	0.32	0.35	0.38	0.40	0.42
	B	250	0.30	0.28	0.28	0.31	0.35	0.38	0.39	0.41
14	A	250	0.34	0.32	0.32	0.34	0.38	0.41	0.44	0.46
	B	250	0.32	0.31	0.31	0.33	0.37	0.41	0.43	0.46
16	A	250	0.36	0.34	0.34	0.36	0.40	0.44	0.47	0.50
	B	250	0.34	0.32	0.32	0.34	0.39	0.43	0.46	0.49
18	A	250	0.37	0.35	0.35	0.38	0.42	0.46	0.50	0.53
	B	250	0.35	0.33	0.33	0.36	0.40	0.45	0.48	0.52
20	A	250	0.39	0.38	0.37	0.40	0.45	0.49	0.53	0.57
	B	250	0.37	0.35	0.35	0.38	0.43	0.48	0.52	0.56
24	A	250	0.43	0.41	0.41	0.45	0.50	0.56	0.61	0.65
	B	250	0.40	0.38	0.38	0.42	0.48	0.54	0.59	0.64

* Total calculated thicknesses include corrosion allowance and casting tolerances added to net thicknesses. Truck superloads were used in calculating the net thicknesses. The total calculated thicknesses are used to select the nearest standard class thickness as shown in Table 6 (*see* Sec. 50-2.4).

† A: flat-bottom trench, without blocks, untamped backfill; B: flat-bottom trench, without blocks, tamped backfill.

‡ The total calculated thicknesses shown in this table do not always increase with depth of cover, as the effect of truck loading is greater at the shallower depths.

stress at zero pressure with external load only. Calculations showed that the larger of the two thicknesses obtained by designing separately for (1) external load with no internal pressure and (2) internal pressure with no external load is greater than the thickness calculated by the appropriate Spangler equation for combined external load and internal pressure. Therefore, the separate stress design detailed in the standard was selected.

6. *Design for internal pressure.* Results of a large number of wall tensile tests conducted in conjunction with full-length bursting tests of ductile-iron pipe [6] of various sizes and thicknesses showed that a design hoop stress of 16,800 psi for internal pressure is appropriate and conservative. This stress is 40 per cent of the minimum yield strength of 42,000 psi based on a longitudinal wall tensile specimen as specified in the pipe standards ASA A21.51 (AWWA C151) and ASA A21.52. Internal pressures used for calculation of the thicknesses in ASA A21.51 (AWWA C151) included an allowance of 100 psi for surges.

7. *Earth loads.* As stated previously, the deflection of a flexible pipe reduces the earth load to less than that imposed on a more rigid pipe in the same condition, because the sidefills carry a part of the trench load transferred to them by the deflection of the pipe. When the sidefill soil and the pipe have the same degree of rigidity and the pipe is installed in a wide trench, the earth load on the pipe is the weight of the prism of soil directly above the pipe. In narrow trenches the load may be less than the prism load due to the influence of friction forces on the trench walls. In the standard the prism load is used for 18-in. and larger pipe laid in trenches of any width. As the reduction in earth load due to transfer of load to the sidefills is dependent on pipe deflection, it is evident that the deflection and, therefore, the reduction in earth load of the smaller diameter pipe would be less than for larger-diameter pipe. From a study of the relative rigidity of the sidefill soil and pipe of various sizes and thicknesses, it was considered that the prism load is applicable to 18-in. and larger ductile-iron pipe. It was also considered that the deflection of 8-in. and smaller pipe would have no effect on the earth load. Therefore, Marston earth loads for relatively rigid pipe are used for 8-in. and smaller pipe. It was further considered that 10-in. through 16-in. pipe sizes are intermediate between these extremes, and for these sizes the earth load is prorated between the Marston load and the prism load.

In the calculations for earth loads, the unit weight of 120 lb per cubic foot for backfill soil is used. Soil weights generally vary from 110 to 130 lb per cubic foot. Experience has shown that 120 lb per cubic foot is commonly considered to be a conservative value for most installations.

8. *Allowance for truck superload.* In computing ductile-iron pipe thicknesses, truck loads are added to earth loads. The truck superload allowances in ASA A21.1 (AWWA H1) were adopted. These loads in most cases equal or exceed the static load from a single AASHO H-20 truck with 16,000 lb on each rear wheel. These truck superloads are based on having the design depth of cover over the pipe. Consideration should be given to the loads that may be transmitted to the pipe if either truck superloads or heavy construction equipment is permitted to pass over the pipe at less than the design depth of cover.

9. *Beam load.* Ductile-iron pipe designed by the method in this standard is more than adequate to resist the bending stresses encountered in Laying Conditions A and B, which represent all normal installations. Therefore, beam calculations are not included in the design procedures of this standard. In certain types of installations, such as of pipe supported by piling in unstable ground, beam strength may be a factor in the design. In such instances the beam stress may be calculated using standard engineering beam formulas, and the deflection may be calculated using a modulus of elasticity of 24,000,000 psi.

10. *Allowance for external corrosion.* Comparative corrosion tests of cast-iron and ductile-iron pipe over a 14-year period in three corrosive soils proved that the corrosion resistance of ductile-iron pipe is essentially the same as that of gray cast-iron pipe.[7] Therefore, in keeping with ASA A21.1 (AWWA H1), the design thickness is increased by 0.08 in. to provide an arbitrary allowance for external corrosion. Present knowledge indicates that this corrosion allowance is adequate for most soils.

11. *Thickness tolerance.* The standard thickness includes a casting tolerance, and the standard weight is calculated from this thickness. The average thickness of a pipe is controlled by the minimum-weight limitation. The minimum thickness is limited by the casting tolerance.

12. *Thickness for tapping.* Some utilities have established minimum numbers of threads for tapped holes in pipe. Consideration should be given to pipe wall thickness and tap size to insure serviceable threaded connections. Service conditions should indicate the extent of full-thread engagement necessary and the necessity for use of outside-sealing corporation stops, tapping saddles, or other fixtures. To facilitate checking the number of threads for taps of various sizes in different pipe thicknesses, appropriate tables are provided in the standards for ductile-iron pipe, ASA A21.51 (AWWA C151) and ASA A21.52.

References

1. Watkins, R. K., & Spangler, M. G. Some Characteristics of the Modulus of Passive Resistance of Soil: A Study in Similitude. *Proc. Highway Res. Board,* 37:576 (1958).
2. Spangler, M. G. The Structural Design of Flexible Pipe Culverts. *Iowa State Univ. Eng. Exp. St. Bul.,* 153:26 (1941).
3. Spangler, M. G. *Soil Engineering.* International Textbook Co., Scranton, Pa. (2nd ed., 1960).
4. Spangler, M. G. Stresses in Pressure Pipelines and Protective Casing Pipes. *J. Struct. Div. ASCE,* 82:St 5 (1956).
5. Sears, E. C. Ductile Iron Pipe Design. *Jour. AWWA,* 56:4 (Jan. 1964).
6. Ductile Iron Pipe Test Report. Cast Iron Pipe Research Assn., Chicago (1964).
7. Soil Corrosion Test Report. Cast Iron Pipe Research Assn., Chicago (1964).

TABLE 4—*Total Calculated Thicknesses of Ductile-Iron Water Pipe for Standard Working Pressures and Depths of Cover (contd.)**

Pipe Size *in.*	Laying Condition†	Rated Working Pressure *psi*	Depth of Cover—*ft*							
			2.5	3.5	5	8	12	16	20	24
			Thickness—*in.*‡							
30	A	200	0.49	0.46	0.47	0.52	0.59	0.66	0.72	0.77
		250	0.49	0.48	0.48	0.52	0.59	0.66	0.72	0.77
		300	0.53	0.53	0.53	0.53	0.59	0.66	0.72	0.77
		350	0.58	0.58	0.58	0.58	0.59	0.66	0.72	0.77
	B	150	0.45	0.43	0.43	0.48	0.56	0.63	0.70	0.75
		200	0.45	0.44	0.44	0.48	0.56	0.63	0.70	0.75
		250	0.48	0.48	0.48	0.48	0.56	0.63	0.70	0.75
		300	0.53	0.53	0.53	0.53	0.56	0.63	0.70	0.75
		350	0.58	0.58	0.58	0.58	0.58	0.63	0.70	0.75
36	A	200	0.54	0.52	0.53	0.59	0.67	0.76	0.83	0.90
		250	0.55	0.55	0.55	0.59	0.67	0.76	0.83	0.90
		300	0.61	0.61	0.61	0.61	0.67	0.76	0.83	0.90
		350	0.66	0.66	0.66	0.66	0.67	0.76	0.83	0.90
	B	150	0.50	0.48	0.49	0.55	0.64	0.73	0.81	0.87
		200	0.50	0.49	0.49	0.55	0.64	0.73	0.81	0.87
		250	0.55	0.55	0.55	0.55	0.64	0.73	0.81	0.87
		300	0.61	0.61	0.61	0.61	0.64	0.73	0.81	0.87
		350	0.66	0.66	0.66	0.66	0.66	0.73	0.81	0.87
42	A	200	0.59	0.57	0.59	0.65	0.76	0.85	0.94	1.01
		250	0.61	0.61	0.61	0.65	0.76	0.85	0.94	1.01
		300	0.68	0.68	0.68	0.68	0.76	0.85	0.94	1.01
		350	0.75	0.75	0.75	0.75	0.76	0.85	0.94	1.01
	B	150	0.54	0.53	0.54	0.61	0.72	0.83	0.91	0.99
		200	0.55	0.55	0.55	0.61	0.72	0.83	0.91	0.99
		250	0.61	0.61	0.61	0.61	0.72	0.83	0.91	0.99
		300	0.68	0.68	0.68	0.68	0.72	0.83	0.91	0.99
		350	0.75	0.75	0.75	0.75	0.75	0.83	0.91	0.99
48	A	200	0.65	0.64	0.66	0.74	0.86	0.96	1.06	1.15
		250	0.69	0.69	0.69	0.74	0.86	0.96	1.06	1.15
		300	0.76	0.76	0.76	0.76	0.86	0.96	1.06	1.15
		350	0.84	0.84	0.84	0.84	0.86	0.96	1.06	1.15
	B	150	0.59	0.58	0.60	0.68	0.81	0.93	1.03	1.12
		200	0.61	0.61	0.61	0.68	0.81	0.93	1.03	1.12
		250	0.69	0.69	0.69	0.69	0.81	0.93	1.03	1.12
		300	0.76	0.76	0.76	0.76	0.81	0.93	1.03	1.12
		350	0.84	0.84	0.84	0.84	0.84	0.93	1.03	1.12

* Total calculated thicknesses include corrosion allowance and casting tolerances added to net thicknesses. Truck superloads and 100-psi surge pressure allowance were used in calculating the net thicknesses. The total calculated thicknesses are used to select the nearest standard class thickness as shown in Table 6 (*see* Sec. 50–2.4).

† A: flat-bottom trench, without blocks, untamped backfill; B: flat-bottom trench, without blocks, tamped backfill.

‡ The total calculated thicknesses shown in this table do not always increase with depth of cover, as the effect of truck loading is greater at the shallower depths.

TABLE 4—*Total Calculated Thicknesses of Ductile-Iron Water Pipe for Standard Working Pressures and Depths of Cover (contd.)**

Pipe Size *in.*	Laying Condition†	Rated Working Pressure *psi*	Depth of Cover—*ft*							
			2.5	3.5	5	8	12	16	20	24
			Thickness—*in.*‡							
16	A	250	0.36	0.34	0.34	0.36	0.40	0.44	0.47	0.50
		300	0.36	0.36	0.36	0.36	0.40	0.44	0.47	0.50
		350	0.38	0.38	0.38	0.38	0.40	0.44	0.47	0.50
	B	200	0.34	0.32	0.32	0.34	0.39	0.43	0.46	0.49
		250	0.34	0.33	0.33	0.34	0.39	0.43	0.46	0.49
		300	0.36	0.36	0.36	0.36	0.39	0.43	0.46	0.49
		350	0.38	0.38	0.38	0.38	0.39	0.43	0.46	0.49
18	A	250	0.37	0.35	0.35	0.38	0.42	0.46	0.50	0.53
		300	0.38	0.38	0.38	0.38	0.42	0.46	0.50	0.53
		350	0.41	0.41	0.41	0.41	0.42	0.46	0.50	0.53
	B	200	0.35	0.33	0.33	0.36	0.40	0.45	0.48	0.52
		250	0.35	0.35	0.35	0.36	0.40	0.45	0.48	0.52
		300	0.38	0.38	0.38	0.38	0.40	0.45	0.48	0.52
		350	0.41	0.41	0.41	0.41	0.41	0.45	0.48	0.52
20	A	200	0.39	0.38	0.37	0.40	0.45	0.49	0.53	0.57
		250	0.39	0.38	0.38	0.40	0.45	0.49	0.53	0.57
		300	0.41	0.41	0.41	0.41	0.45	0.49	0.53	0.57
		350	0.44	0.44	0.44	0.44	0.45	0.49	0.53	0.57
	B	200	0.37	0.35	0.35	0.38	0.43	0.48	0.52	0.56
		250	0.38	0.38	0.38	0.38	0.43	0.48	0.52	0.56
		300	0.41	0.41	0.41	0.41	0.43	0.48	0.52	0.56
		350	0.44	0.44	0.44	0.44	0.44	0.48	0.52	0.56
24	A	200	0.43	0.41	0.41	0.45	0.50	0.56	0.61	0.65
		250	0.43	0.42	0.42	0.45	0.50	0.56	0.61	0.65
		300	0.46	0.46	0.46	0.46	0.50	0.56	0.61	0.65
		350	0.50	0.50	0.50	0.50	0.50	0.56	0.61	0.65
	B	200	0.40	0.38	0.38	0.42	0.48	0.54	0.59	0.64
		250	0.42	0.42	0.42	0.42	0.48	0.54	0.59	0.64
		300	0.46	0.46	0.46	0.46	0.48	0.54	0.59	0.64
		350	0.50	0.50	0.50	0.50	0.50	0.54	0.59	0.64

* Total calculated thicknesses include corrosion allowance and casting tolerances added to net thicknesses. Truck superloads and 100-psi surge pressure allowance were used in calculating the net thicknesses. The total calculated thicknesses are used to select the nearest standard class thickness as shown in Table 6 (*see* Sec. 50–2.4).

† A: flat-bottom trench, without blocks, untamped backfill; B: flat-bottom trench, without blocks, tamped backfill.

‡ The total calculated thicknesses shown in this table do not always increase with depth of cover, as the effect of truck loading is greater at the shallower depths.

Committee Personnel

Subcommittee 1—Pipe, which developed this standard, had the following personnel at that time:

Chairman: J. Thompson Vann
Vice-Chairman: Edwin B. Cobb

User Members	*Producer Members*
Frank E. Dolson	Carl A. Henrikson
Harry P. Hagedorn	Arthur Roberts Jr.
Richmond C. Holcombe	Charles C. Salvage
Rolf H. Jensen	Sidney P. Teague
Robert C. Kauffman	
George F. Keenan	
Loring E. Tabor	
William J. Towner	

Sectional Committee A21 on Cast-Iron Pipe and Fittings, which reviewed and approved this standard, had the following personnel at the time of approval:

Chairman: Edwin B. Cobb
Vice-Chairman: Herbert W. Stuart
Secretary: James B. Ramsey

Organization Represented	*Representative*
American Gas Association	Richmond C. Holcombe
American Society of Civil Engineers	Kenneth W. Henderson
American Society of Mechanical Engineers	Louis R. Howson
American Society for Testing & Materials	Harry P. Hagedorn
American Water Works Association	Vance C. Lischer
Cast Iron Pipe Research Association	Wallace T. Miller
	Herbert W. Stuart
	J. Thompson Vann
Individual Producers	Richard T. VerHalen
	William T. Maher
Manufacturers' Standardization Society of the Valve and Fittings Industry	Emil J. Bartholet
New England Water Works Association	Edwin B. Cobb
Standardization Division—General Services Administration	Robert E. Lyons
Member at Large	Rolf H. Jensen
Canadian Standards Association	Robert C. Shnay *

* Liaison representative.

Table of Contents

Section	Page
50–1 Scope	1
50–2 Procedure for Selecting Thickness	1
50–3 Design Example for Selecting Thickness of 24-in. Pipe	4
50–4 Design Theory	10
50–5 Optional Calculation of Pipe Deflection	11

Table	Page
1 Earth Loads (W_e) and Truck Superloads (W_t)	2
2 Diameter-Thickness Ratios	3
3 Allowances for Casting Tolerance	4
4 Total Calculated Thicknesses of Ductile-Iron Water Pipe for Standard Working Pressures and Depths of Cover	5
5 Total Calculated Thicknesses of Ductile-Iron Gas Pipe for Standard Working Pressures and Depths of Cover	8
6 Standard Thickness Classes of Ductile-Iron Pipe	9
7 Explanation of Symbols	9
8 Design Values of the Bedding Coefficients and Modulus of Soil Reaction	10

TABLE 4

*Total Calculated Thicknesses of Ductile-Iron Water Pipe for Standard Working Pressures and Depths of Cover**

Pipe Size *in.*	Laying Condition†	Rated Working Pressure *psi*	Depth of Cover—*ft*							
			2.5	3.5	5	8	12	16	20	24
			Thickness—*in.*‡							
3	A	250	0.17	0.17	0.18	0.19	0.21	0.22	0.23	0.24
		350	0.18	0.18	0.18	0.19	0.21	0.22	0.23	0.24
	B	250	0.17	0.17	0.18	0.19	0.20	0.22	0.23	0.24
		350	0.18	0.18	0.18	0.19	0.20	0.22	0.23	0.24
4	A	350	0.19	0.19	0.19	0.21	0.22	0.24	0.25	0.26
	B	250	0.18	0.18	0.19	0.20	0.22	0.24	0.25	0.26
		350	0.19	0.19	0.19	0.20	0.22	0.24	0.25	0.26
6	A	350	0.22	0.22	0.22	0.24	0.27	0.29	0.30	0.30
	B	300	0.22	0.21	0.22	0.24	0.26	0.28	0.30	0.30
		350	0.22	0.22	0.22	0.24	0.26	0.28	0.30	0.30
8	A	350	0.25	0.25	0.25	0.27	0.30	0.32	0.33	0.34
	B	300	0.25	0.24	0.24	0.27	0.30	0.32	0.33	0.34
		350	0.25	0.25	0.25	0.27	0.30	0.32	0.33	0.34
10	A	300	0.29	0.28	0.28	0.30	0.33	0.36	0.37	0.38
		350	0.29	0.29	0.29	0.30	0.33	0.36	0.37	0.38
	B	300	0.28	0.27	0.27	0.29	0.33	0.35	0.37	0.38
		350	0.29	0.29	0.29	0.29	0.33	0.35	0.37	0.38
12	A	300	0.31	0.30	0.30	0.32	0.35	0.38	0.40	0.42
		350	0.32	0.32	0.32	0.32	0.35	0.38	0.40	0.42
	B	250	0.30	0.28	0.28	0.31	0.35	0.38	0.39	0.41
		300	0.30	0.30	0.30	0.31	0.35	0.38	0.39	0.41
		350	0.32	0.32	0.32	0.32	0.35	0.38	0.39	0.41
14	A	250	0.34	0.32	0.32	0.34	0.38	0.41	0.44	0.46
		300	0.34	0.33	0.33	0.34	0.38	0.41	0.44	0.46
		350	0.35	0.35	0.35	0.35	0.38	0.41	0.44	0.46
	B	250	0.32	0.31	0.31	0.33	0.37	0.41	0.43	0.46
		300	0.33	0.33	0.33	0.33	0.37	0.41	0.43	0.46
		350	0.35	0.35	0.35	0.35	0.37	0.41	0.43	0.46

* Total calculated thicknesses include corrosion allowance and casting tolerances added to net thicknesses. Truck superloads and 100-psi surge pressure allowance were used in calculating the net thicknesses. The total calculated thicknesses are used to select the nearest standard class thickness as shown in Table 6 (*see* Sec. 50–2.4).

† A: flat-bottom trench, without blocks, untamped backfill; B: flat-bottom trench, without blocks, tamped backfill.

‡ The total calculated thicknesses shown in this table do not always increase with depth of cover, as the effect of truck loading is greater at the shallower depths.

c. With the above value of $\frac{W_e}{D}$ and the appropriate laying condition (A or B), determine the diameter-thickness ratio, $\frac{D}{t}$, from Table 2.

d. Determine the required net thickness of the pipe wall in inches, t, by dividing the outside diameter, D, by the diameter-thickness ratio, $\frac{D}{t}$. This will be the net thickness of the pipe wall required to support the trench load under the conditions assumed.

[NOTE: The outside diameter, D, is constant for all thicknesses of pipe of the same nominal size. Its substitution in place of the theoretically correct mean diameter or inside diameter, as applicable, introduces no significant error.]

50–2.2. *Step 2—Design for internal pressure:* The net thickness required for internal pressure is computed by the equation for hoop stress:

$$t = \frac{pD}{2s}, \qquad (1)$$

in which t is net thickness in inches, p is working pressure plus surge pressure,* in pounds per square inch, D is outside diameter of pipe in inches,† and s is design hoop stress (16,800 psi).

50–2.3—*Step 3—Selection of Net Thickness and Addition of Allowances:*

a. The net thickness, t, is selected from Step 1 or Step 2, whichever thickness is larger.

b. A corrosion allowance of 0.08 in. is added to the net thickness, t. The resulting thickness is the minimum manufacturing thickness, t_1. Where severe corrosion is anticipated, an analysis of the conditions should be made.

c. A casting tolerance from Table 3 is added to the minimum manufacturing thickness, t_1, and the resulting thickness is the total calculated thickness. (Total calculated thicknesses of ductile-iron pipe for standard working pressures and depths of cover are given for water pipe and gas pipe, respectively, in Tables 4 and 5.)

50–2.4. *Step 4—Selection of standard thickness:* In specifying and ordering pipe, the total calculated thickness from Sec. 50–2.3c is used to select one of the standard class thicknesses in Table 6. The standard thickness nearest to the calculated thickness is selected. When the calculated thickness is halfway between two standard thicknesses, the larger of these is selected. When the calculated thickness is less than the smallest standard thickness in Table 6, the smallest standard thickness is selected.‡

TABLE 3

Allowances for Casting Tolerance

Size *in.*	Casting Tolerance *in.*
3–8	0.05
10–12	0.06
14–42	0.07
48	0.08

Sec. 50–3—Design Example for Selecting Thickness for 24-in. Pipe

PROBLEM: Calculate the thickness for 24-in. ductile-iron pipe laid on flat-bottom trench with tamped backfill (Laying Condition B), under 5 ft of

* An allowance for surge pressure of 100 psi has been included in the calculation of the thicknesses for water pipe. A surge allowance is not required for gas pipe. When surges more than 100 psi greater than the working pressure are anticipated, an analysis of the conditions should be made.

† *See* Note in Sec. 50–2.1.

‡ For pipe to be tapped for service connections, *see* Item 12 of the foreword of this Standard.

UDC 621.774.1

ASA A21.50–1965
(AWWA H3–65)

American Standard

for the

THICKNESS DESIGN OF DUCTILE-IRON PIPE

Sec. 50–1—Scope

This standard gives the design method and design stresses to determine the thicknesses of ductile-iron pipe complying with the requirements of ASA A21.51 (AWWA C151)—Ductile-Iron Pipe, Centrifugally Cast in Metal Molds or Sand-Lined Molds, for Water or Other Liquids, and A21.52—Ductile-Iron Pipe, Centrifugally Cast in Metal Molds or Sand-Lined Molds, for Gas.

The required thickness of ductile-iron pipe is determined by considering trench load and internal pressure separately. Calculations are made for the thickness required to resist the bending stress of trench load and the thickness required to resist the hoop stress of internal pressure; the larger of these is selected as the net design thickness. To this net thickness is added a corrosion allowance to obtain the minimum manufacturing thickness and a casting tolerance to obtain the total calculated thickness. Finally, the thickness for specifying and ordering is selected from a table of standard class thicknesses.

An example of this design method is given in Sec. 50–3.

Sec. 50–2—Procedure for Selecting Thickness

50–2.1. *Step 1—Design for trench load:* The net thickness required for trench load under the more usual field conditions (Laying Conditions A and B) may be readily determined using Tables 1 and 2. The bases for these tables are described in Sec. 50–4. The procedure is as follows:

a. From Table 1 determine W_e, the trench load per linear foot of pipe, which is earth load (W_e) plus truck superload (W_t) as applicable.

b. Convert the above trench load to pounds per linear foot per inch diameter by dividing W_e by the outside diameter in inches (D) from Table 1 $\left(\frac{W_e}{D}\right)$.

TABLE 1

Earth Loads (W_e) *and Truck Superloads* (W_t)

Size *in.*	Outside Diameter (D) *in.*	Earth Load	Truck Load	Earth Load	Truck Load	Earth Load	Truck Load	Earth Load	Truck Load
		lb/lin ft							
		2.5-ft Cover		3.5-ft Cover		5-ft Cover		8-ft Cover	
3	3.96	182	162	260	81	376	54	609	40
4	4.80	226	297	324	162	471	81	765	54
6	6.90	309	567	448	324	657	189	1,075	94
8	9.05	380	783	557	486	824	297	1,356	148
10	11.10	402	972	582	621	854	378	1,397	189
12	13.20	423	1,161	607	756	884	459	1,438	243
14	15.30	445	1,217	633	807	915	540	1,478	270
16	17.40	466	1,307	658	879	945	590	1,519	324
18	19.50	488	1,400	683	964	975	632	1,560	364
20	21.60	540	1,524	756	1,076	1,080	729	1,728	410
24	25.80	645	1,662	903	1,159	1,290	769	2,064	462
30	32.00	800	1,925	1,120	1,356	1,600	918	2,560	564
36	38.30	958	2,182	1,340	1,577	1,915	1,090	3,064	632
42	44.50	1,112	2,354	1,558	1,750	2,225	1,239	3,560	717
48	50.80	1,270	2,527	1,778	1,922	2,540	1,400	4,064	814
		12-ft Cover		16-ft Cover		20-ft Cover		24-ft Cover	
3	3.96	920	27	1,230	14	1,538	9	1,852	7
4	4.80	1,157	40	1,549	27	1,942	18	2,334	14
6	6.90	1,632	68	2,188	40	2,524	26	2,647	20
8	9.05	2,066	94	2,592	54	2,815	36	2,965	28
10	11.10	2,121	108	2,698	68	3,032	45	3,308	35
12	13.20	2,176	122	2,803	81	3,249	53	3,651	41
14	15.30	2,230	135	2,909	94	3,466	62	3,994	48
16	17.40	2,285	162	3,014	122	3,683	81	4,337	62
18	19.50	2,340	189	3,120	135	3,900	89	4,680	69
20	21.60	2,592	216	3,456	162	4,320	107	5,184	83
24	25.80	3,096	256	4,128	176	5,160	116	6,192	90
30	32.00	3,840	324	5,120	216	6,400	143	7,680	110
36	38.30	4,596	378	6,128	256	7,660	169	9,192	131
42	44.50	5,340	459	7,120	310	8,900	205	10,680	158
48	50.80	6,096	513	8,128	351	10,160	232	12,192	179

TABLE 2

Diameter-Thickness Ratios

$\frac{W_e}{D}$ *lb/ft/in.* A*	$\frac{W_e}{D}$ *lb/ft/in.* B†	$\frac{D}{t}$‡	$\frac{W_e}{D}$ *lb/ft/in.* A*	$\frac{W_e}{D}$ *lb/ft/in.* B†	$\frac{D}{t}$‡	$\frac{W_e}{D}$ *lb/ft/in.* A*	$\frac{W_e}{D}$ *lb/ft/in.* B†	$\frac{D}{t}$‡
62	73	120						
62	74	119	94	108	89	189	200	59
63	74	118	96	109	88	194	206	58
64	75	117	98	111	87	200	212	57
65	76	116	99	113	86	207	218	56
66	77	115	101	115	85	214	225	55
66	78	114	103	117	84	221	232	54
67	79	113	105	118	83	230	240	53
68	80	112	107	120	82	238	248	52
69	81	111	109	122	81	246	257	51
70	82	110	111	124	80	256	265	50
71	83	109	114	127	79	265	275	49
71	84	108	116	129	78	276	285	48
72	85	107	119	132	77	287	297	47
73	86	106	122	134	76	300	309	46
74	87	105	124	137	75	312	321	45
75	88	104	127	140	74	326	335	44
76	89	103	130	142	73	340	349	43
77	90	102	133	145	72	357	365	42
78	91	101	136	149	71	373	382	41
80	92	100	139	152	70	391	400	40
81	93	99	142	155	69	411	420	39
82	94	98	146	159	68	432	441	38
83	96	97	151	163	67	456	464	37
84	97	96	155	166	66	481	489	36
86	99	95	159	170	65	508	516	35
87	100	94	163	175	64	538	545	34
88	102	93	167	179	63	570	577	33
90	103	92	173	184	62	606	612	32
91	104	91	177	189	61	644	652	31
93	106	90	183	194	60	688	694	30

* Laying Condition A: flat-bottom trench, without blocks, untamped backfill.
† Laying Condition B: flat-bottom trench, without blocks, tamped backfill.
‡ The $\frac{D}{t}$ for the tabulated $\frac{W_e}{D}$ nearest to the calculated $\frac{W_e}{D}$ is selected. When the calculated $\frac{W_e}{D}$ is halfway between two tabulated values, the larger $\frac{W_e}{D}$ should be used.

ASA A21.51
(AWWA C151)

AMERICAN STANDARD FOR DUCTILE-IRON PIPE, CENTRIFUGALLY CAST IN METAL MOLDS OR SAND-LINED MOLDS, FOR WATER OR OTHER LIQUIDS

ASA A21.51

ADDENDUM TO TABLE 51.3
"Standard Dimensions and Weights of Push-On Joint Ductile-Iron Pipe":

Size in.	Thickness Class	Thickness in.	O.D.‡ in.	Wt. of Barrel per ft. lb.	Wt. of Bell lb.	20-ft. Laying Length	
						Wt. Per Length* lb.	Avg. Wt. Per ft.† lb.
54	1	0.65	57.10	352.7	370	7425	371.2
54	2	0.73	57.10	395.6	370	8280	414.1
54	3	0.81	57.10	438.3	370	9135	456.8
54	4	0.89	57.10	480.9	370	9990	499.4
54	5	0.97	57.10	523.4	370	10840	541.9
54	6	1.05	57.10	565.8	370	11685	584.3

*Including bell; calculated weight of pipe rounded off to nearest 5 lb.
†Including bell; average weight, per foot, based on calculated weight of pipe before rounding.
‡Tolerance of OD of spigot end of 54-in. pipe: +0.08 in., −0.06 in.

MANUFACTURERS' PROPOSED ADDENDUM TO AMERICAN STANDARD A21.51-1965, "DUCTILE-IRON PIPE, CENTRIFUGALLY CAST IN METAL MOLDS OR SAND-LINED MOLDS, FOR WATER OR OTHER LIQUIDS." 30" AND 36" PIPE IN 18-FT. LAYING LENGTHS

This proposed Addendum to American Standard A21.51—1965, "Ductile-Iron Pipe, Centrifugally Cast in Metal Molds or Sand-Lined Molds, for Water or Other Liquids" 30" and 36" pipe in 18-ft. Laying Lengths.

Approved as USA Standard December 19, 1968.

MANUFACTURERS' PROPOSED ADDENDUM TO AMERICAN STANDARD A21.51-1965, "DUCTILE-IRON PIPE, CENTRIFUGALLY CAST IN METAL MOLDS OR SAND-LINED MOLDS, FOR WATER OR OTHER LIQUIDS." 30" AND 36" PIPE IN 18-FT. LAYING LENGTHS

ADDENDUM TO TABLE 51.1
"Selection Table for Ductile-Iron Pipe*":

	Size in.	Rated Working Pressure psi	Thickness Class	Thickness in.	O.D. in.	18-ft. Laying Length Push-On Joint Wt. Per Length† lb.	Push-On Joint Avg. Wt. per ft.‡ lb.	Mechanical Joint Wt. Per. Length† lb.	Mechanical Joint Avg. Wt. per ft.‡ lb.
5-ft. Cover	30	200	1	0.43	32.00	2565	142.5	2565	142.5
8-ft. Cover	30	250	2	0.47	32.00	2780	154.5	2780	154.5
12-ft. Cover	30	300	4	0.55	32.00	3210	178.3	3210	178.3
16-ft. Cover	30	350	6	0.63	32.00	3635	202.0	3635	202.0
5-ft. Cover	36	200	1	0.48	38.30	3435	190.7	3450	191.7
8-ft. Cover	36	250	2	0.53	38.30	3755	208.6	3775	209.6
12-ft. Cover	36	300	4	0.63	38.30	4400	244.3	4415	245.3
16-ft. Cover	36	350	6	0.73	38.30	5040	279.9	5055	280.9

*The thicknesses in this table are equal to or in excess of those required to withstand the rated working pressures plus a surge allowance of 100 psi.
All pipe shown in this table for the depths of cover indicated are adequate for trench loads including truck superloads under Laying Condition B (flat-bottom trench, without blocks, tamped backfill).
For other depths of cover, rated working pressures, and Laying Condition A, see Table 51.2. For the basis of design see ASA A21.50.
†Including bell; calculated weight of pipe rounded off to nearest 5 lb.
‡Including bell; average weight per foot based on calculated weight of pipe before rounding.

ADDENDUM TO TABLE 51.2
"Standard Thickness Selection Table for Ductile-Iron Pipe*":

Size in.	Laying Condition†	Rated Working Pressure psi	Depth of Cover—ft. 2.5	3.5	5	8	12	16
			Thickness—in.					
54	A	200	0.73	0.73	0.73	0.81	0.97	
54	A	250	0.81	0.81	0.81	0.81	0.97	
54	A	300	0.89	0.89	0.89	0.89	0.97	
54	A	350	0.97	0.97	0.97	0.97	0.97	
54	B	200	0.65	0.65	0.65	0.73	0.89	1.05
54	B	250	0.81	0.81	0.81	0.81	0.89	1.05
54	B	300	0.89	0.89	0.89	0.89	0.89	1.05
54	B	350	0.97	0.97	0.97	0.97	0.97	1.05

*The thicknesses in this table are equal to or in excess of those required to withstand the rated working pressure plus a surge allowance of 100 psi.
All thicknesses shown in this table for the depths of cover indicated are adequate for trench loads including truck superloads.
For the basis of design see American Standard A21.50.
†Laying condition A: flat-bottom trench, without blocks, untamped backfill; Laying Condition B; flat-bottom trench, without blocks, tamped backfill.

MANUFACTURERS' PROPOSED ADDENDUM TO AMERICAN STANDARD A21.51-1965, "DUCTILE-IRON PIPE, CENTRIFUGALLY CAST IN METAL MOLDS OR SAND-LINED MOLDS, FOR WATER OR OTHER LIQUIDS." 54-IN. PIPE IN 20-FT. LAYING LENGTH

ADDENDUM TO SEC. 51-7.2

Thickness tolerance of 54-in. pipe, minus 0.09 in.

ADDENDUM TO TABLE 51.1

"Selection Table for Ductile-Iron Pipe*":

	Size in.	Rated Working Pressure psi	Thickness Class	Thickness in.	O.D. in.	Push-on Joint 20-ft Laying Length	
						Wt. per Length, lb.†	Avg. Wt. Per ft. lb.‡
5 ft. Cover	54	200	1	0.65	57.10	7425	371.2
8-ft. Cover	54	200	2	0.73	57.10	8280	414.1
12-ft. Cover	54	300	4	0.89	57.10	9990	499.4
16-ft. Cover	54	350	6	1.05	57.10	11685	584.3

*The thicknesses in this table are equal to or in excess of those required to withstand the rated working pressures plus a surge allowance of 100 psi.

All pipe shown in this table for the depths of cover indicated are adequate for trench loads including truck superloads under Laying Condition B (flat-bottom trench, without blocks, tamped backfill).

For other depths of cover, rated working pressures, and Laying Condition A, see Table 51.2. For the basis of design see American Standard A21.50.

†Including bell; calculated weight of pipe rounded off to nearest 5 lb.

‡Including bell; average weight per foot based on calculated weight of pipe before rounding.

ADDENDUM TO TABLE 51.3

"Standard Dimensions and Weights of Push-On Joint Ductile-Iron Pipe":

Size in.	Thickness Class	Thickness in.	O.D.‡ in.	Wt. of Barrel per ft. lb.	Wt. of Bell lb.	18-ft. Laying Length	
						Wt. Per Length* lb.	Avg. Wt. Per ft.† lb.
30	1	0.43	32.00	130.5	216	2565	142.5
30	2	0.47	32.00	142.5	216	2780	154.5
30	3	0.51	32.00	154.4	216	2995	166.4
30	4	0.55	32.00	166.3	216	3210	178.3
30	5	0.59	32.00	178.2	216	3425	190.2
30	6	0.63	32.00	190.0	216	3635	202.0
36	1	0.48	38.30	174.5	292	3435	190.7
36	2	0.53	38.30	192.4	292	3755	208.6
36	3	0.58	38.30	210.3	292	4075	226.5
36	4	0.63	38.30	228.1	292	4400	244.3
36	5	0.68	38.30	245.9	292	4720	262.1
36	6	0.73	38.30	263.7	292	5040	279.9

*Including bell; calculated weight of pipe rounded off to nearest 5 lb.

†Including bell; average weight, per foot, based on calculated weight of pipe before rounding.

‡Tolerances of OD of spigot end: 30-36 in., +0.08 in., —0.06 in.

ADDENDUM TO TABLE 51.4
"Standard Dimensions and Weights of Mechanical-Joint Ductile-Iron Pipe":

Size in.	Thickness Class	Thickness in.	O.D.‡ in.	Wt. of Barrel per ft. lb.	Wt. of Bell** lb.	18-ft Laying Length	
						Wt. Per Length* lb.	Avg. Wt. Per ft.† lb.
30	1	0.43	32.00	130.5	216	2565	142.5
30	2	0.47	32.00	142.5	216	2780	154.5
30	3	0.51	32.00	154.4	216	2995	166.4
30	4	0.55	32.00	166.3	216	3210	178.3
30	5	0.59	32.00	178.2	216	3425	190.2
30	6	0.63	32.00	190.0	216	3635	202.0
36	1	0.48	38.30	174.5	310	3450	191.7
36	2	0.53	38.30	192.4	310	3775	209.6
36	3	0.58	38.30	210.3	310	4095	227.5
36	4	0.63	38.30	228.1	310	4415	245.3
36	5	0.68	38.30	245.9	310	4735	263.1
36	6	0.73	38.30	263.7	310	5055	280.9

*Including bell; calculated weight of pipe rounded off to nearest 5 lb.
†Including bell; average weight, per foot, based on calculated weight of pipe before rounding.
‡Tolerances of OD of spigot end: 30-36 in., +0.08 in., −0.06 in.
**The Mechanical-Joint bell for these sizes of ductile iron pipe have thicknesses different than those shown in ASA A21.11 which are based on gray iron pipe. These reduced thicknesses provide a lighter weight bell which is compatible with the wall thicknesses of ductile iron pipe. The internal socket dimensions, bolt circle and bolt holes of the redesigned bell remain identical to those specified in A21.11 to assure interchangeability of the joint.

MANUFACTURERS' PROPOSED ADDENDUM TO AMERICAN STANDARD A21.51-1965, "DUCTILE-IRON PIPE, CENTRIFUGALLY CAST IN METAL MOLDS OR SAND-LINED MOLDS, FOR WATER OR OTHER LIQUIDS." 54-IN. PIPE IN 20-FT. LAYING LENGTH

UDC 621.774.1

ASA A21.51–1965
(AWWA C151–65)

AMERICAN STANDARD

for

DUCTILE-IRON PIPE, CENTRIFUGALLY CAST IN METAL MOLDS OR SAND-LINED MOLDS, FOR WATER OR OTHER LIQUIDS

PUBLISHED BY AMERICAN WATER WORKS ASSOCIATION, INC.

SPONSORS

American Gas Association
American Society for Testing and Materials
American Water Works Association
New England Water Works Association

Approved by American Standards Association, May 10, 1965

AMERICAN WATER WORKS ASSOCIATION
Incorporated
2 Park Avenue, New York, N.Y. 10016

2P—17M—12/65

American Standard

An American Standard implies a consensus of those substantially concerned with its scope and provisions. The consensus principle extends to the initiation of work under the procedure of the American Standards Association, to the method of work to be followed, and to the final approval of the standard.

An American Standard is intended as a guide to aid the manufacturer, the consumer, and the general public. The existence of an American Standard does not in any respect preclude any party who has approved of the standard from manufacturing, selling, or using products, processes, or procedures not conforming to the standard.

An American Standard defines a product, process, or procedure with reference to one or more of the following: nomenclature, composition, construction, dimensions, tolerances, safety, operating characteristics, performance, quality, rating, certification, testing, and the service for which designed.

American Standards are subject to periodic review. They are reaffirmed or revised to meet changing economic conditions and technological progress. Users of American Standards are cautioned to secure the latest editions.

Producers of goods made in conformity with an American Standard are encouraged to state on their own responsibility in advertising, promotion material, or on tags or labels, that the goods are produced in conformity with particular American Standards. The inclusion in such advertising and promotion media, or on tags or labels, of information concerning the characteristics covered by the standard to define its scope is also encouraged.

Copyright © 1965 by the American Water Works Association, Inc., Made in USA.

TABLE B

Pipe Thicknesses Required for Different Tap Sizes With AWWA C800 Standard Corporation Stop Threads With 2, 3, and 4 Full Threads*

Pipe Size *in.*	No. of Threads	Tap Size—*in.*						
		½	¾	⅞	1	1¼	1½	2
		Pipe Thickness—*in.*						
3	2	0.21	0.24	0.25	0.33			
3	3	0.29	0.32	0.33	0.41			
3	4	0.36	0.39	0.40	0.49			
4	2	0.19	0.22	0.23	0.30	0.36		
4	3	0.27	0.30	0.31	0.38	0.45		
4	4	0.34	0.37	0.38	0.46	0.54		
6	2	0.18	0.20	0.20	0.26	0.30	0.35	
6	3	0.26	0.28	0.28	0.34	0.39	0.44	
6	4	0.33	0.35	0.35	0.42	0.48	0.53	
8	2	0.17	0.18	0.19	0.24	0.27	0.31	0.39
8	3	0.25	0.26	0.27	0.32	0.36	0.40	0.48
8	4	0.32	0.33	0.34	0.40	0.45	0.49	0.57
10	2	0.17	0.17	0.18	0.23	0.25	0.28	0.35
10	3	0.25	0.25	0.26	0.31	0.34	0.37	0.44
10	4	0.32	0.32	0.33	0.39	0.43	0.46	0.53
12	2	0.16	0.17	0.17	0.22	0.24	0.26	0.32
12	3	0.24	0.25	0.25	0.30	0.33	0.35	0.41
12	4	0.31	0.32	0.32	0.38	0.42	0.44	0.50
14	2	0.16	0.17	0.17	0.21	0.23	0.25	0.30
14	3	0.24	0.25	0.25	0.29	0.32	0.34	0.39
14	4	0.31	0.32	0.32	0.37	0.41	0.43	0.48
16	2	0.16	0.16	0.17	0.21	0.22	0.24	0.28
16	3	0.24	0.24	0.25	0.29	0.31	0.33	0.37
16	4	0.31	0.31	0.32	0.37	0.40	0.42	0.46
18	2	0.15	0.16	0.16	0.20	0.21	0.23	0.27
18	3	0.23	0.24	0.24	0.28	0.30	0.32	0.36
18	4	0.30	0.31	0.31	0.36	0.39	0.41	0.45
20	2	0.15	0.16	0.16	0.20	0.21	0.23	0.26
20	3	0.23	0.24	0.24	0.28	0.30	0.32	0.35
20	4	0.30	0.31	0.31	0.36	0.39	0.41	0.44
24	2	0.15	0.15	0.16	0.19	0.21	0.22	0.24
24	3	0.23	0.23	0.24	0.27	0.30	0.31	0.33
24	4	0.30	0.30	0.31	0.35	0.39	0.40	0.42
30	2	0.15	0.15	0.16	0.19	0.20	0.21	0.23
30	3	0.23	0.23	0.24	0.27	0.29	0.30	0.32
30	4	0.30	0.30	0.31	0.35	0.38	0.39	0.41
36	2	0.14	0.15	0.15	0.19	0.20	0.20	0.22
36	3	0.22	0.23	0.23	0.27	0.29	0.29	0.31
36	4	0.29	0.30	0.30	0.35	0.38	0.38	0.40
42	2	0.14	0.14	0.15	0.18	0.19	0.20	0.21
42	3	0.22	0.22	0.23	0.26	0.28	0.29	0.30
42	4	0.29	0.29	0.30	0.34	0.37	0.38	0.39
48	2	0.14	0.14	0.15	0.18	0.18	0.19	0.20
48	3	0.22	0.22	0.23	0.26	0.27	0.28	0.29
48	4	0.29	0.29	0.30	0.34	0.36	0.37	0.38

* This thread is commonly known to the trade as the Mueller thread.

Appendix

This appendix is for information and is not a part of ASA A21.51—American Standard for Ductile-Iron Pipe Centrifugally Cast in Metal Molds or Sand-Lined Molds for Water or Other Liquids.

TABLE A

Pipe Thicknesses Required for Different Tap Sizes With ASA B2.1 Standard Taper Pipe Threads With 2, 3, and 4 Full Threads

Pipe Size *in.*	No. of Threads	Tap Size—*in.*									
		½	¾	1	1¼	1½	2	2½	3	3½	4
		Pipe Thickness—*in.*									
3	2	0.18	0.21	0.28							
3	3	0.26	0.29	0.37							
3	4	0.33	0.36	0.46							
4	2	0.17	0.19	0.26	0.31						
4	3	0.25	0.27	0.35	0.40						
4	4	0.32	0.34	0.44	0.49						
6	2	0.17	0.18	0.23	0.27	0.30					
6	3	0.25	0.26	0.32	0.36	0.39					
6	4	0.32	0.33	0.41	0.45	0.48					
8	2	0.16	0.17	0.22	0.24	0.27	0.33				
8	3	0.24	0.25	0.31	0.33	0.36	0.42				
8	4	0.31	0.32	0.40	0.42	0.45	0.51				
10	2	0.15	0.17	0.21	0.23	0.25	0.30	0.44			
10	3	0.23	0.25	0.30	0.32	0.34	0.39	0.56			
10	4	0.30	0.32	0.39	0.41	0.43	0.48	0.69			
12	2	0.15	0.16	0.20	0.22	0.24	0.28	0.40	0.48		
12	3	0.23	0.24	0.29	0.31	0.33	0.37	0.52	0.60		
12	4	0.30	0.31	0.38	0.40	0.42	0.46	0.65	0.73		
14	2	0.15	0.16	0.20	0.22	0.23	0.26	0.38	0.45	0.51	0.58
14	3	0.23	0.24	0.29	0.31	0.32	0.35	0.50	0.58	0.64	0.70
14	4	0.30	0.31	0.38	0.40	0.41	0.44	0.63	0.70	0.76	0.83
16	2	0.15	0.16	0.20	0.21	0.22	0.25	0.37	0.43	0.48	0.54
16	3	0.23	0.24	0.29	0.30	0.31	0.34	0.50	0.56	0.60	0.66
16	4	0.30	0.31	0.38	0.39	0.40	0.43	0.62	0.68	0.73	0.79
18	2	0.15	0.15	0.19	0.21	0.22	0.24	0.35	0.41	0.46	0.51
18	3	0.23	0.23	0.28	0.30	0.31	0.33	0.48	0.54	0.58	0.64
18	4	0.30	0.30	0.37	0.39	0.40	0.42	0.60	0.66	0.71	0.76
20	2	0.15	0.15	0.19	0.20	0.21	0.23	0.34	0.39	0.44	0.49
20	3	0.23	0.23	0.28	0.29	0.30	0.32	0.46	0.52	0.56	0.62
20	4	0.30	0.30	0.37	0.38	0.39	0.41	0.59	0.64	0.69	0.74
24	2	0.14	0.15	0.19	0.20	0.21	0.22	0.32	0.37	0.40	0.45
24	3	0.22	0.23	0.28	0.29	0.30	0.31	0.44	0.50	0.52	0.58
24	4	0.29	0.30	0.37	0.38	0.39	0.40	0.57	0.62	0.65	0.70
30	2	0.14	0.15	0.19	0.19	0.20	0.21	0.31	0.34	0.37	0.41
30	3	0.22	0.23	0.28	0.28	0.29	0.30	0.44	0.46	0.50	0.54
30	4	0.29	0.30	0.37	0.37	0.38	0.39	0.56	0.59	0.62	0.66
36	2	0.14	0.14	0.18	0.19	0.20	0.21	0.30	0.33	0.35	0.38
36	3	0.22	0.22	0.27	0.28	0.29	0.30	0.42	0.46	0.48	0.50
36	4	0.29	0.29	0.36	0.37	0.38	0.39	0.55	0.58	0.60	0.63
42	2	0.14	0.14	0.18	0.19	0.19	0.20	0.29	0.32	0.34	0.36
42	3	0.22	0.22	0.27	0.28	0.28	0.29	0.42	0.44	0.46	0.48
42	4	0.29	0.29	0.36	0.37	0.37	0.38	0.54	0.57	0.59	0.61
48	2	0.14	0.14	0.18	0.18	0.19	0.20	0.29	0.31	0.32	0.35
48	3	0.22	0.22	0.27	0.27	0.28	0.29	0.42	0.44	0.44	0.48
48	4	0.29	0.29	0.36	0.36	0.37	0.38	0.54	0.56	0.57	0.60

Foreword

This foreword is for information and is not a part of A21.51 American Standard for Ductile-Iron Pipe, Centrifugally Cast, in Metal Molds or Sand-Lined Molds, for Water or Other Liquids.

In 1926, ASA Sectional Committee A21—Cast-Iron Pipe and Fittings was organized. The sponsor societies were the American Gas Association, the American Society for Testing and Materials, the American Water Works Association, and the New England Water Works Association. Sectional Committee A21 was assigned the following scope:

Unification of specifications for cast-iron pipe including materials, dimensions, pressure ratings, methods of manufacture (including such new developments as centrifugal casting) insofar as they may be necessary to secure satisfactory specifications; elimination of unnecessary sizes and varieties; consideration of the possibility of developing a coordinated scheme of metallic pipe and fittings applicable to all common mediums and methods of making up joints insofar as they are determining as to the dimensional design of cast-iron pipe.

The types of cast-iron pipe [are] to include bell-and-spigot pipe, flanged pipe, flanged and bell-mouth fittings and wall castings, pipe elbows, tees, wyes, return bends, and other fittings not now included in standard lists; cast-iron pipe threaded for flanges or couplings. The standardization is not to include methods of installing pipe and similar matters except as to the making up of joints in its relationship to the dimensional standardization of pipe and fittings, as noted above.

In 1958, Sectional Committee A21 was reorganized, and subcommittees were established to study each group of standards in accordance with the review and revision policy of ASA.

Subcommittee 1—Pipe was organized with the following scope:

The scope of the committee shall include an examination of all present A21 standards for pipe to determine what is needed to bring these up to date. The examination shall include A21.1, A21.2, A21.3, A21.6, A21.7, A21.8, A21.9, as well as any other matters pertaining to pipe standards.

Ductile-iron pipe for water service has been used for a number of years and purchased in accordance with manufacturers' and users' standards. Members of Subcommittee 1, as well as other users, requested the adoption of an American Standard for this pipe. Therefore, in 1964, Subcommittee 1, operating within the scope of its activities, submitted a proposed standard for 3-in. through 48-in. ductile-iron pipe for water or other liquids to Sectional Committee A21. The pipe in this standard were designed by the method in ASA A21.50 (AWWA H3), "American Standard for the Thickness Design of Ductile-Iron Pipe."

Ductile iron is usually defined as cast iron with primary graphite in the nodular or spherulitic form. The 60–42–10 grade, with the matrix predominantly ferrite, is specified for ductile-iron pipe covered by this standard. This grade of ductile iron is used for pipe because of its high strength and ductility, as well as its resistance to impact and corrosion.

Cast-iron glands in accordance with ASA A21.11 (AWWA C111) "American Standard for Rubber Gasket Joints For Cast-Iron Pressure Pipe and Fittings," of latest revision, are specified for use with mechanical-joint ductile-iron pipe in this standard. Since 1953, when ASA A21.11 was first published, such glands have proved to be satisfactory for use with cast-iron pipe for water or other liquids at a maximum working pressure of 350 psi. Because of this excellent service record and because neither additional strength nor ductility is required for the service intended by the standard, cast-iron glands are specified for use with this ductile-iron pipe.

Ductile-iron pipe may be tapped for threaded connections with the equipment normally used for tapping gray-iron pipe. Consideration should be given to pipe wall thicknesses and tap size to insure serviceable threaded connections. Service conditions should dictate the extent of full thread engagement necessary and whether the use of outside-sealing corporation stops, tapping saddles, or other fixtures is necessary. To facilitate checking the number of threads for taps of various sizes in different pipe thicknesses, appropriate tables are provided in the Appendix.

The fittings covered by ASA A21.10 (AWWA C110) "American Standard for Cast-Iron Fittings, 2 in. Through 48 in., for Water and Other Liquids," are dimensionally compatible with the pipe covered by this standard. Some of these fittings are of ductile iron. There is at present no American Standard covering all sizes and types of ductile-iron fittings.

Options

This standard includes certain options which, if desired, must be specified on the purchase order. Also, a number of items must be specified to describe completely the pipe required. The following summarizes these details and available options, and lists the sections of the standard where they can be found:

1. Size, joint type, thickness or class, and laying length—Tables
2. Special joints—Sec. 51–3.1
3. Certification by manufacturer—Sec. 51–4
4. Inspection by purchaser—Sec. 51–5
5. Cement lining—Sec. 51–8.2
6. Special coatings and linings—Sec. 51–8.4
7. Special marking on pipe—Sec. 51–10
8. Written transcripts of foundry records—Sec. 51–14
9. Special tests—Sec. 51–15

TABLE 51.4—*Standard Dimensions and Weights of Mechanical-Joint Ductile-Iron Pipe (contd.)*

Size, *in.*	Thickness Class	Thickness *in.*	OD§ *in.*	Wt. of Barrel Per Ft *lb*	Wt. of Bell *lb*	18-Ft Laying Length		20-Ft Laying Length	
						Wt. Per Lgth.* *lb*	Avg. Wt. Per Ft† *lb*	Wt. Per Lgth.* *lb*	Avg. Wt. Per Ft† *lb*
18	1	0.38	19.50	69.8	111	1,365	76.0	1,505	75.4
18	2	0.41	19.50	75.2	111	1,465	81.4	1,615	80.8
18	3	0.44	19.50	80.6	111	1,560	86.8	1,725	86.2
18	4	0.47	19.50	86.0	111	1,660	92.2	1,830	91.6
18	5	0.50	19.50	91.3	111	1,755	97.5	1,935	96.8
18	6	0.53	19.50	96.7	111	1,850	102.9	2,045	102.2
20	1	0.39	21.60	79.5	131	1,560	86.8	1,720	86.0
20	2	0.42	21.60	85.5	131	1,670	92.8	1,840	92.0
20	3	0.45	21.60	91.5	131	1,780	98.8	1,960	98.0
20	4	0.48	21.60	97.5	131	1,885	104.8	2,080	104.0
20	5	0.51	21.60	103.4	131	1,990	110.7	2,200	110.0
20	6	0.54	21.60	109.3	131	2,100	116.6	2,315	115.8
24	1	0.41	25.80	100.1	174	1,975	109.8	2,175	108.8
24	2	0.44	25.80	107.3	174	2,105	117.0	2,320	116.0
24	3	0.47	25.80	114.4	174	2,235	124.1	2,460	123.1
24	4	0.50	25.80	121.6	174	2,365	131.3	2,605	130.3
24	5	0.53	25.80	128.8	174	2,490	138.5	2,750	137.5
24	6	0.56	25.80	135.9	174	2,620	145.6	2,890	144.6
30	1	0.43	32.00	130.5	228			2,840	141.9
30	2	0.47	32.00	142.5	228			3,080	153.9
30	3	0.51	32.00	154.4	228			3,315	165.8
30	4	0.55	32.00	166.3	228			3,555	177.7
30	5	0.59	32.00	178.2	228			3,790	189.6
30	6	0.63	32.00	190.0	228			4,030	201.4
36	1	0.48	38.30	174.5	310			3,800	190.0
36	2	0.53	38.30	192.4	310			4,160	207.9
36	3	0.58	38.30	210.3	310			4,515	225.8
36	4	0.63	38.30	228.1	310			4,870	243.6
36	5	0.68	38.30	245.9	310			5,230	261.4
36	6	0.73	38.30	263.7	310			5,585	279.2
42	1	0.53	44.50	224.0	405			4,885	244.2
42	2	0.59	44.50	249.1	405			5,385	269.4
42	3	0.65	44.50	274.0	405			5,885	294.2
42	4	0.71	44.50	298.9	405			6,385	319.2
42	5	0.77	44.50	323.7	405			6,880	344.0
42	6	0.83	44.50	348.4	405			7,375	368.6
48	1	0.58	50.80	280.0	505			4,985‖	311.6‖
48	2	0.65	50.80	313.4	505			5,520‖	345.0‖
48	3	0.72	50.80	346.6	505			6,050‖	378.2‖
48	4	0.79	50.80	379.8	505			6,580‖	411.4‖
48	5	0.86	50.80	412.9	505			7,110‖	444.5‖
48	6	0.93	50.80	445.9	505			7,640‖	477.5‖

* Including bell; calculated weight of pipe rounded off to nearest 5 lb.
† Including bell; average weight, per foot, based on calculated weight of pipe before rounding.
§ Tolerances of OD of spigot end: 3–12 in., ±0.06 in.; 14–24 in., +0.05 in., −0.08 in.; 30–48 in., +0.08 in., −0.06 in.
‖ Based on 16-ft laying length; 48-in. mechanical-joint pipe is available only in 16-ft laying length.

TABLE 51.4

Standard Dimensions and Weights of Mechanical-Joint Ductile-Iron Pipe

Size, *in.*	Thickness Class	Thickness *in.*	OD§ *in.*	Wt. of Barrel Per Ft *lb*	Wt. of Bell *lb*	18-Ft Laying Length		20-Ft Laying Length	
						Wt. Per Lgth.* *lb*	Avg. Wt. Per Ft† *lb*	Wt. Per Lgth.* *lb*	Avg. Wt. Per Ft† *lb*
3‡	2	0.28	3.96	9.9	11	190	10.5	210	10.4
3	3	0.31	3.96	10.9	11	205	11.5	230	11.4
3	4	0.34	3.96	11.8	11	225	12.4	245	12.4
3	5	0.37	3.96	12.8	11	240	13.4	265	13.4
3	6	0.40	3.96	13.7	11	260	14.3	285	14.2
4	2	0.29	4.80	12.6	16	245	13.5	270	13.4
4	3	0.32	4.80	13.8	16	265	14.7	290	14.6
4	4	0.35	4.80	15.0	16	285	15.9	315	15.8
4	5	0.38	4.80	16.1	16	305	17.0	340	16.9
4	6	0.41	4.80	17.3	16	325	18.2	360	18.1
6	2	0.31	6.90	19.6	22	375	20.8	415	20.7
6	3	0.34	6.90	21.4	22	405	22.6	450	22.5
6	4	0.37	6.90	23.2	22	440	24.4	485	24.3
6	5	0.40	6.90	25.0	22	470	26.2	520	26.1
6	6	0.43	6.90	26.7	22	505	27.9	555	27.8
8	2	0.33	9.05	27.7	29	530	29.3	585	29.2
8	3	0.36	9.05	30.1	29	570	31.7	630	31.6
8	4	0.39	9.05	32.5	29	615	34.1	680	34.0
8	5	0.42	9.05	34.8	29	655	36.4	725	36.2
8	6	0.45	9.05	37.2	29	700	38.8	775	38.6
10	2	0.35	11.10	36.2	39	690	38.4	765	38.2
10	3	0.38	11.10	39.2	39	745	41.4	825	41.2
10	4	0.41	11.10	42.1	39	795	44.3	880	44.0
10	5	0.44	11.10	45.1	39	850	47.3	940	47.0
10	6	0.47	11.10	48.0	39	905	50.2	1,000	50.0
12	2	0.37	13.20	45.6	49	870	48.3	960	48.0
12	3	0.40	13.20	49.2	49	935	51.9	1,035	51.7
12	4	0.43	13.20	52.8	49	1,000	55.5	1,105	55.2
12	5	0.46	13.20	56.3	49	1,060	59.0	1,175	58.8
12	6	0.49	13.20	59.9	49	1,125	62.6	1,245	62.3
14	1	0.36	15.30	51.7	76	1,005	55.9	1,110	55.5
14	2	0.39	15.30	55.9	76	1,080	60.1	1,195	59.7
14	3	0.42	15.30	60.1	76	1,160	64.3	1,280	63.9
14	4	0.45	15.30	64.2	76	1,230	68.4	1,360	68.0
14	5	0.48	15.30	68.4	76	1,305	72.6	1,445	72.2
14	6	0.51	15.30	72.5	76	1,380	76.7	1,525	76.3
16	1	0.37	17.40	60.6	93	1,185	65.8	1,305	65.2
16	2	0.40	17.40	65.4	93	1,270	70.6	1,400	70.0
16	3	0.43	17.40	70.1	93	1,355	75.3	1,495	74.8
16	4	0.46	17.40	74.9	93	1,440	80.1	1,590	79.6
16	5	0.49	17.40	79.7	93	1,530	84.9	1,685	84.3
16	6	0.52	17.40	84.4	93	1,610	89.6	1,780	89.0

* Including bell; calculated weight of pipe rounded off to nearest 5 lb.
† Including bell; average weight, per foot, based on calculated weight of pipe before rounding.
§ Tolerance of OD of spigot end: 3–12 in., ±0.06 in.; 14–24 in., +0.05 in., −0.08 in.; 30–48 in., +0.08 in., −0.06 in.
‡ Pipe of 3-in. size also available in 12-ft laying length with following weights:

Thickness Class	Thickness *in.*	Wt. Per Lgth.* *lb*	Avg. Wt. Per Ft† *lb*
2	0.28	130	10.8
3	0.31	140	11.8
4	0.34	155	12.7
5	0.37	165	13.7
6	0.40	175	14.6

Committee Personnel

Subcommittee 1—Pipe, which developed this standard, had the following personnel at that time:

J. Thompson Vann, *Chairman*
Edwin B. Cobb, *Vice-Chairman*

User Members	*Producer Members*
Frank E. Dolson	Carl A. Henrikson
Harry P. Hagedorn	Arthur Roberts Jr.
Richmond C. Holcombe	Charles C. Salvage
Rolf H. Jensen	Sidney P. Teague
Robert C. Kauffman	
George F. Keenan	
Loring E. Tabor	
William J. Towner	

Sectional Committee A21 on cast-iron pipe and fittings, which reviewed and approved this standard, had the following personnel at the time of approval:

Edwin B. Cobb, *Chairman*
Herbert W. Stuart, *Vice-Chairman*
James B. Ramsey, *Secretary*

Organization Represented	*Name of Representative*
American Gas Association	Richmond C. Holcombe
American Society of Civil Engineers	Kenneth W. Henderson
American Society of Mechanical Engineers	Louis R. Howson
American Society for Testing and Materials	Harry P. Hagedorn
American Water Works Association	Vance C. Lischer
Cast Iron Pipe Research Association	Wallace T. Miller Herbert W. Stuart J. Thompson Vann
Individual Producers	Richard T. VerHalen William T. Maher
Manufacturers' Standardization Society of the Valve and Fittings Industry	Emil J. Bartholet
New England Water Works Association	Edwin B. Cobb
Standardization Division—General Services Administration	Robert E. Lyons
Member at Large	Rolf H. Jensen
Canadian Standards Association	Robert C. Shnay *

* Liaison representative.

Table of Contents

SEC.		PAGE
51–1	Scope	1
51–2	Definitions	1
51–3	General Requirements	1
51–4	Inspection and Certification by Manufacturer	2
51–5	Inspection by Purchaser	2
51–6	Delivery and Acceptance	2
51–7	Tolerances or Permitted Variations	2
51–8	Coatings and Linings	2
51–9	Hydrostatic Test	3
51–10	Marking Pipe	3
51–11	Weighing Pipe	3
51–12	Acceptance Tests	3
51–13	Additional Control Tests by Manufacturer	6
51–14	Foundry Records	6
51–15	Additional Tests Required by Purchaser	6
51–16	Defective Specimens and Retests	6
51–17	Rejection of Pipe	6
51–18	Determining Rejection	6
	Index to Tables	7

TABLE 51.3—*Standard Dimensions and Weights of Push-On Joint Ductile-Iron Pipe (contd.)*

Size, *in.*	Thickness Class	Thickness *in.*	OD§ *in.*	Wt. of Barrel Per Ft *lb*	Wt. of Bell *lb*	18-Ft Laying Length		20-Ft Laying Length	
						Wt. Per Lgth.* *lb*	Avg. Wt. Per Ft† *lb*	Wt. Per Lgth.* *lb*	Avg. Wt. Per Ft† *lb*
18	1	0.38	19.50	69.8	112	1,370	76.0	1,510	75.4
18	2	0.41	19.50	75.2	112	1,465	81.4	1,615	80.8
18	3	0.44	19.50	80.6	112	1,565	86.8	1,725	86.2
18	4	0.47	19.50	86.0	112	1,660	92.2	1,830	91.6
18	5	0.50	19.50	91.3	112	1,755	97.5	1,940	96.9
18	6	0.53	19.50	96.7	112	1,855	102.9	2,045	102.3
20	1	0.39	21.60	79.5	130	1,560	86.7	1,720	86.0
20	2	0.42	21.60	85.5	130	1,670	92.7	1,840	92.0
20	3	0.45	21.60	91.5	130	1,775	98.7	1,960	98.0
20	4	0.48	21.60	97.5	130	1,885	104.7	2,080	104.0
20	5	0.51	21.60	103.4	130	1,990	110.6	2,200	109.9
20	6	0.54	21.60	109.3	130	2,095	116.5	2,315	115.8
24	1	0.41	25.80	100.1	168	1,970	109.4	2,170	108.5
24	2	0.44	25.80	107.3	168	2,100	116.6	2,315	115.7
24	3	0.47	25.80	114.4	168	2,225	123.7	2,455	122.8
24	4	0.50	25.80	121.6	168	2,355	130.9	2,600	130.0
24	5	0.53	25.80	128.8	168	2,485	138.1	2,745	137.2
24	6	0.56	25.80	135.9	168	2,615	145.2	2,885	144.3
30	1	0.43	32.00	130.5	163			2,775	138.7
30	2	0.47	32.00	142.5	163			3,015	150.7
30	3	0.51	32.00	154.4	163			3,250	162.6
30	4	0.55	32.00	166.3	163			3,490	174.4
30	5	0.59	32.00	178.2	163			3,725	186.3
30	6	0.63	32.00	190.0	163			3,965	198.2
36	1	0.48	38.30	174.5	216			3,705	185.3
36	2	0.53	38.30	192.4	216			4,065	203.2
36	3	0.58	38.30	210.3	216			4,420	221.1
36	4	0.63	38.30	228.1	216			4,780	238.9
36	5	0.68	38.30	245.9	216			5,135	256.7
36	6	0.73	38.30	263.7	216			5,490	274.5
42	1	0.53	44.50	224.0	261			4,740	237.0
42	2	0.59	44.50	249.1	261			5,245	262.2
42	3	0.65	44.50	274.0	261			5,740	287.0
42	4	0.71	44.50	298.9	261			6,240	312.0
42	5	0.77	44.50	323.7	261			6,735	336.8
42	6	0.83	44.50	348.4	261			7,230	361.4
48	1	0.58	50.80	280.0	316			5,915	295.8
48	2	0.65	50.80	313.4	316			6,585	329.2
48	3	0.72	50.80	346.6	316			7,250	362.4
48	4	0.79	50.80	379.8	316			7,910	395.6
48	5	0.86	50.80	412.9	316			8,575	428.7
48	6	0.93	50.80	445.9	316			9,235	461.7

* Including bell; calculated weight of pipe rounded off to nearest 5 lb.
† Including bell, average weight, per foot, based on calculated weight of pipe before rounding.
§ Tolerances of OD of spigot end: 3–12 in., ±0.06 in.; 14–24 in., +0.05 in., −0.08 in.; 30–48 in., +0.08 in. −0.06 in.

TABLE 51.3

Standard Dimensions and Weights of Push-On Joint Ductile-Iron Pipe

Size, *in.*	Thickness Class	Thickness *in.*	OD§ *in.*	Wt. of Barrel Per Ft *lb*	Wt. of Bell *lb*	18-Ft Laying Length		20-Ft Laying Length	
						Wt. Per Lgth.* *lb*	Avg. Wt. Per Ft† *lb*	Wt. Per Lgth.* *lb*	Avg. Wt. Per Ft† *lb*
3‡	2	0.28	3.96	9.9	11	190	10.5	210	10.4
3	3	0.31	3.96	10.9	11	205	11.5	230	11.4
3	4	0.34	3.96	11.8	11	225	12.4	245	12.4
3	5	0.37	3.96	12.8	11	240	13.4	265	13.4
3	6	0.40	3.96	13.7	11	260	14.3	285	14.2
4	2	0.29	4.80	12.6	14	240	13.4	265	13.3
4	3	0.32	4.80	13.8	14	260	14.6	290	14.5
4	4	0.35	4.80	15.0	14	285	15.8	315	15.7
4	5	0.38	4.80	16.1	14	305	16.9	335	16.8
4	6	0.41	4.80	17.3	14	325	18.1	360	18.0
6	2	0.31	6.90	19.6	25	380	21.0	415	20.8
6	3	0.34	6.90	21.4	25	410	22.8	455	22.6
6	4	0.37	6.90	23.2	25	445	24.6	490	24.4
6	5	0.40	6.90	25.0	25	475	26.4	525	26.2
6	6	0.43	6.90	26.7	25	505	28.1	560	28.0
8	2	0.33	9.05	27.7	36	535	29.7	590	29.5
8	3	0.36	9.05	30.1	36	580	32.1	640	31.9
8	4	0.39	9.05	32.5	36	620	34.5	685	34.3
8	5	0.42	9.05	34.8	36	660	36.8	730	36.6
8	6	0.45	9.05	37.2	36	705	39.2	780	39.0
10	2	0.35	11.10	36.2	49	700	38.9	775	38.6
10	3	0.38	11.10	39.2	49	755	41.9	835	41.6
10	4	0.41	11.10	42.1	49	805	44.8	890	44.6
10	5	0.44	11.10	45.1	49	860	47.8	950	47.6
10	6	0.47	11.10	48.0	49	915	50.7	1,010	50.4
12	2	0.37	13.20	45.6	62	885	49.0	975	48.7
12	3	0.40	13.20	49.2	62	950	52.6	1,045	52.3
12	4	0.43	13.20	52.8	62	1,010	56.2	1,120	55.9
12	5	0.46	13.20	56.3	62	1,075	59.7	1,190	59.4
12	6	0.49	13.20	59.9	62	1,140	63.3	1,260	63.0
14	1	0.36	15.30	51.7	76	1,005	55.9	1,110	55.5
14	2	0.39	15.30	55.9	76	1,080	60.1	1,195	59.7
14	3	0.42	15.30	60.1	76	1,160	64.3	1,280	63.9
14	4	0.45	15.30	64.2	76	1,230	68.4	1,360	68.0
14	5	0.48	15.30	68.4	76	1,305	72.6	1,445	72.2
14	6	0.51	15.30	72.5	76	1,380	76.7	1,525	76.3
16	1	0.37	17.40	60.6	94	1,185	65.8	1,305	65.3
16	2	0.40	17.40	65.4	94	1,270	70.6	1,400	70.1
16	3	0.43	17.40	70.1	94	1,355	75.3	1,495	74.8
16	4	0.46	17.40	74.9	94	1,440	80.1	1,590	79.6
16	5	0.49	17.40	79.7	94	1,530	84.9	1,690	84.4
16	6	0.52	17.40	84.4	94	1,615	89.6	1,780	89.1

* Including bell; calculated weight of pipe rounded off to nearest 5 lb.
† Including bell; average weight, per foot, based on calculated weight of pipe before rounding.
§ Tolerances of OD of spigot end: 3–12 in., ±0.06 in.; 14–24 in., +0.05 in., −0.08 in.; 30–48 in., +0.08 in., −0.06 in.
‡ Pipe of 3-in. size also available in 12-ft laying length with following weights:

Thickness Class	Thickness *in.*	Wt. Per Lgth.* *lb*	Avg. Wt. Per Ft† *lb*
2	0.28	130	10.8
3	0.31	140	11.8
4	0.34	155	12.7
5	0.37	165	13.7
6	0.40	175	14.6

UDC 621.774.1

ASA A21.51–1965
(AWWA C151–65)

American Standard for

Ductile-Iron Pipe, Centrifugally Cast in Metal Molds or Sand-Lined Molds, for Water or Other Liquids

Sec. 51–1—Scope

This standard covers 3-in. through 48-in. ductile-iron pipe centrifugally cast in metal molds or sand-lined molds for water or other liquids. Characteristics of such pipe with push-on joints and mechanical joints are given in the tables. This standard may be used for pipe with such other types of joints as may be agreed upon at the time of purchase.

Sec. 51–2—Definitions

Under this standard, the following definitions shall apply:

51–2.1. *Purchaser.* The party entering into a contract or agreement to purchase pipe according to this standard.

51–2.2. *Manufacturer.* The party that produces the pipe.

51–2.3. *Inspector.* The representative of the purchaser, authorized to inspect in behalf of the purchaser to determine whether or not the pipe meet this standard.

51–2.4. *Mechanical joint.* The gasketed and bolted joint as detailed in ASA A21.11 (AWWA C111) of latest revision, except that the nominal thickness of the bell, *S*, shall not be less than the nominal wall thickness of the pipe.

51–2.5. *Push-on joint.* The push-on joint is a single rubber-gasket joint and is designed for assembly by positioning a continuous, molded rubber ring gasket in an annular recess in the socket of the pipe or fitting and forcing the plain end of the entering pipe into the socket, thereby compressing the gasket radially to the pipe to form a positive seal. The design and shape of the gasket and the annular recess shall be such that the gasket is locked in place against displacement as the joint is assembled. Details of the joint design shall be in accordance with the manufacturer's standard practice.

Sec. 51–3—General Requirements

51–3.1. Pipe with mechanical joints or push-on joints shall conform to the dimensions and weights shown in the tables in this standard and to the applicable requirements of ASA A21.11 (AWWA C111) of latest revision to insure interchangeability. Unless otherwise specified, the mechanical-joint glands shall be cast iron in accordance with ASA A21.11 of latest revision, and bolts shall conform to the requirements of the same standard. Pipe with other types of joints shall comply with the joint dimensions and weights agreed upon at the time of purchase, but in all other respects shall fulfill the requirements of this standard.

51–3.2. The nominal laying length of the pipe shall be as shown in the

tables. A maximum of 20 per cent of the total number of pipe of each size specified in an order may be furnished as much as 24 in. shorter than the nominal laying length, and an additional 10 per cent may be furnished as much as 6 in. shorter than nominal laying length.

Sec. 51-4—Inspection and Certification by Manufacturer

51-4.1. The manufacturer shall establish the necessary quality control and inspection practice to assure compliance with this standard.

51-4.2. The manufacturer shall, if required on the purchase order, furnish a sworn statement that the inspection and all of the specified tests have been made and the results thereof comply with the requirements of this standard.

Sec. 51-5—Inspection by Purchaser

51-5.1. If the purchaser desires to inspect pipe at the manufacturer's plant, the purchaser shall so specify on the purchase order, stating the conditions (such as time, and the extent of inspection) under which the inspection shall be made.

51-5.2. The inspector shall have free access to those parts of the manufacturer's plant that are necessary to insure compliance with this standard. The manufacturer shall make available for the inspector's use such gages as are necessary for inspection. The manufacturer shall provide the inspector with such handling assistance as is necessary.

Sec. 51-6—Delivery and Acceptance

All pipe and accessories shall comply with this standard. Pipe and accessories not complying with this standard shall be replaced by the manufacturer at the agreed point of delivery. The manufacturer shall not be liable for shortages or damaged pipe after acceptance at the agreed point of delivery except as recorded on the delivery receipt or similar document by the carrier's agent.

Sec. 51-7—Tolerances or Permitted Variations

51-7.1. *Dimensions.* Pipe and accessories shall be gaged at sufficiently frequent intervals to determine whether the dimensions are in accordance with the table shown in this standard and to insure dimensional control. The inside of the sockets and the outside of the spigot ends shall be tested with circular gages.

51-7.2. *Thickness.* Tolerances less than the standard thicknesses of pipe and bell shall not be more than those shown below:

Size *in.*	Minus Tolerance *in.*
3–8	0.05
10–12	0.06
14–42	0.07
48	0.08

51-7.3. *Weight.* The weight of any single pipe shall not be less than the tabulated weight by more than 5 per cent for pipe 12 in. or smaller in diameter, nor by more than 4 per cent for pipe larger than 12 in. in diameter.

Sec. 51-8—Coatings and Linings

51-8.1. *Standard outside coating.* The standard outside coating for general use under all normal conditions shall be a bituminous coating of either coal-tar or asphalt base approximately 1 mil thick. The standard coating shall be applied to the outside of all pipe, unless otherwise specified. The finished coating shall be continuous, smooth, neither brittle when cold nor sticky when exposed to the sun and shall be strongly adherent to the pipe

TABLE 51.2—*Standard Thickness Selection Table for Ductile-Iron Pipe**—(*contd.*)

Size *in.*	Laying Condition†	Rated Working Pressure, *psi*	Depth of Cover—*ft*							
			2½	3½	5	8	12	16	20	24
			Thickness—*in.*							
24	B	250	0.41	0.41	0.41	0.41	0.47	0.53		
24	B	300	0.47	0.47	0.47	0.47	0.47	0.53		
24	B	350	0.50	0.50	0.50	0.50	0.50	0.53		
30	A	250	0.51	0.47	0.47	0.51	0.59			
30	A	300	0.55	0.55	0.55	0.55	0.59			
30	A	350	0.59	0.59	0.59	0.59	0.59			
30	B	200	0.47	0.43	0.43	0.47	0.55	0.63		
30	B	250	0.47	0.47	0.47	0.47	0.55	0.63		
30	B	300	0.55	0.55	0.55	0.55	0.55	0.63		
30	B	350	0.59	0.59	0.59	0.59	0.59	0.63		
36	A	250	0.53	0.53	0.53	0.58	0.68			
36	A	300	0.63	0.63	0.63	0.63	0.68			
36	A	350	0.68	0.68	0.68	0.68	0.68			
36	B	200	0.48	0.48	0.48	0.53	0.63	0.73		
36	B	250	0.53	0.53	0.53	0.53	0.63	0.73		
36	B	300	0.63	0.63	0.63	0.63	0.63	0.73		
36	B	350	0.68	0.68	0.68	0.68	0.68	0.73		
42	A	250	0.59	0.59	0.59	0.65	0.77			
42	A	300	0.71	0.71	0.71	0.71	0.77			
42	A	350	0.77	0.77	0.77	0.77	0.77			
42	B	200	0.53	0.53	0.53	0.59	0.71	0.83		
42	B	250	0.59	0.59	0.59	0.59	0.71	0.83		
42	B	300	0.71	0.71	0.71	0.71	0.71	0.83		
42	B	350	0.77	0.77	0.77	0.77	0.77	0.83		
48	A	200	0.65	0.65	0.65	0.72	0.86			
48	A	250	0.72	0.72	0.72	0.72	0.86			
48	A	300	0.79	0.79	0.79	0.79	0.86			
48	A	350	0.86	0.86	0.86	0.86	0.86			
48	B	200	0.58	0.58	0.58	0.65	0.79	0.93		
48	B	250	0.72	0.72	0.72	0.72	0.79	0.93		
48	B	300	0.79	0.79	0.79	0.79	0.79	0.93		
48	B	350	0.86	0.86	0.86	0.86	0.86	0.93		

* The thicknesses in this table are equal to or in excess of those required to withstand the rated working pressure plus a surge allowance of 100 psi.

All thicknesses shown in this table for the depths of cover indicated are adequate for trench loads including truck superloads.

For the basis of design see American Standard A21.50.

† Laying condition A: flat-bottom trench, without blocks, untamped backfill; Laying Condition B: flat-bottom trench, without blocks, tamped backfill.

TABLE 51.2

*Standard Thickness Selection Table for Ductile-Iron Pipe**

Size *in.*	Laying Condition†	Rated Working Pressure, *psi*	Depth of Cover—*ft*							
			2½	3½	5	8	12	16	20	24
			Thickness—*in.*							
3	A	350	0.28	0.28	0.28	0.28	0.28	0.28	0.28	0.28
3	B	350	0.28	0.28	0.28	0.28	0.28	0.28	0.28	0.28
4	A	350	0.29	0.29	0.29	0.29	0.29	0.29	0.29	0.29
4	B	350	0.29	0.29	0.29	0.29	0.29	0.29	0.29	0.29
6	A	350	0.31	0.31	0.31	0.31	0.31	0.31	0.31	0.31
6	B	350	0.31	0.31	0.31	0.31	0.31	0.31	0.31	0.31
8	A	350	0.33	0.33	0.33	0.33	0.33	0.33	0.33	0.33
8	B	350	0.33	0.33	0.33	0.33	0.33	0.33	0.33	0.33
10	A	350	0.35	0.35	0.35	0.35	0.35	0.35	0.38	0.38
10	B	350	0.35	0.35	0.35	0.35	0.35	0.35	0.38	0.38
12	A	350	0.37	0.37	0.37	0.37	0.37	0.37	0.40	0.43
12	B	350	0.37	0.37	0.37	0.37	0.37	0.37	0.40	0.40
14	A	350	0.36	0.36	0.36	0.36	0.39	0.42	0.45	0.45
14	B	350	0.36	0.36	0.36	0.36	0.36	0.42	0.42	0.45
16	A	350	0.37	0.37	0.37	0.37	0.40	0.43	0.46	0.49
16	B	350	0.37	0.37	0.37	0.37	0.40	0.43	0.46	0.49
18	A	300	0.38	0.38	0.38	0.38	0.41	0.47	0.50	0.53
18	A	350	0.41	0.41	0.41	0.41	0.41	0.47	0.50	0.53
18	B	300	0.38	0.38	0.38	0.38	0.41	0.44	0.47	0.53
18	B	350	0.41	0.41	0.41	0.41	0.41	0.44	0.47	0.53
20	A	250	0.39	0.39	0.39	0.39	0.45	0.48	0.54	
20	A	300	0.42	0.42	0.42	0.42	0.45	0.48	0.54	
20	A	350	0.45	0.45	0.45	0.45	0.45	0.48	0.54	
20	B	250	0.39	0.39	0.39	0.39	0.42	0.48	0.51	
20	B	300	0.42	0.42	0.42	0.42	0.42	0.48	0.51	
20	B	350	0.45	0.45	0.45	0.45	0.45	0.48	0.51	
24	A	250	0.44	0.41	0.41	0.44	0.50	0.56		
24	A	300	0.47	0.47	0.47	0.47	0.50	0.56		
24	A	350	0.50	0.50	0.50	0.50	0.50	0.56		

* The thicknesses in this table are equal to or in excess of those required to withstand the rated working pressure plus a surge allowance of 100 psi.

All thicknesses shown in this table for the depths of cover indicated are adequate for trench loads including truck superloads.

For the basis of design see American Standard A21.50.

† Laying condition A: flat-bottom trench, without blocks, untamped backfill; Laying Condition B: flat-bottom trench, without blocks, tamped backfill.

51–8.2. *Cement-mortar linings.* Cement linings shall be in accordance with ASA A21.4 (AWWA C104) of latest revision. Cement linings are recommended for most waters, and, if desired, shall be specified in the invitation for bids and on the purchase order.

51–8.3. *Bituminous inside coating.* The inside coating for pipe not cement lined shall be a bituminous material similar to the standard outside coating, as thick as practicable (at least 1 mil). The coating after drying for at least 48 hr, shall have no deleterious effect on the quality, color, odor, or taste of potable water in contact with the coating for a minimum of 48 hr. The bituminous inside coating shall be applied to the inside surface of all pipe unless otherwise specified. Experience has indicated that such coating is not complete protection against loss in pipe capacity due to tuberculation.

51–8.4. *Special coatings and linings.* For special conditions, other types of coatings and linings may be available. Such special coatings and linings shall be specified in the invitation for bids and on the purchase order.

Sec. 51–9—Hydrostatic Test

Each pipe shall be subjected to a hydrostatic test of not less than 500 psi. This test may be made either before or after the standard outside coating and the bituminous inside coating have been applied, but shall be made before the application of cement lining or of a special lining. This requirement is not intended to preclude retesting, at the manufacturer's option, after application of a cement or special lining.

The pipe shall be under the full test pressure for a least 10 sec. Suitable controls and recording devices shall be provided so that the test pressure and duration may be adequately ascertained. Any pipe that leaks or does not withstand the test pressure shall be rejected.

Sec. 51–10—Marking Pipe

The weight, class or nominal thickness, and casting period shall be shown on each pipe. The manufacturer's mark, the year in which the pipe was produced, and the letters "DI" or "DUCTILE" shall be cast or stamped on the pipe. When specified on the purchase order, initials not exceeding four in number shall be cast or stamped on the pipe. All required markings shall be clear and legible and all cast marks shall be on or near the bell.

Sec. 51–11—Weighing Pipe

Each pipe shall be weighed before the application of any lining or coating other than the standard coating and the weight shown on the outside or inside of the bell or spigot end.

Sec. 51–12—Acceptance Tests

The standard acceptance tests for the physical characteristics of the pipe shall be as follows:

51–12.1. *Tensile test.* A tensile test specimen shall be cut longitudinally from the midsection of the pipe wall. This specimen shall be machined and tested in accordance with Fig. 51.1 and ASTM E8–61T—Tension Testing of Metallic Materials. The yield strength shall be determined by the 0.2 per cent offset, halt-of-pointer, or extension-under-load methods. If check tests are to be made, the 0.2 per cent offset method shall be used. All specimens shall be tested at room temperature (70°F ± 10°).

51–12.1.1. *Acceptance values.* The acceptance values for test specimens shall be as follows:

Grade of iron: 60–42–10

1. Minimum tensile strength: 60,000 psi.
2. Minimum yield strength: 42,000 psi.
3. Minimum elongation: 10 per cent.

51–12.2. *Impact test.* Tests shall be made in accordance with ASTM E23–62 Notched Charpy Tests, except that specimens shall be 0.500 in. and full thickness of pipe wall. The notched impact test specimen shall be in accordance with Fig. 51.2 If the pipe wall thickness exceeds 0.40 in., the impact specimen may be machined to a nominal thickness of 0.40 in. In all tests, impact values are to be corrected to 0.40-in. wall thickness by calculation as follows:

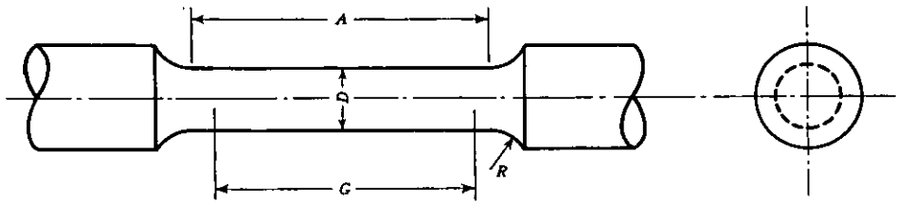

Fig. 51.1. Tensile-Test Specimen

The tensile-test specimen dimensions are given in the following table:

Dimension	Standard Specimen 0.500 in. round	Small-Size Specimens Proportional to Standard			
		0.350 in. round	0.250 in. round	0.175 in. round	0.125 in. round
	Dimensions—*in.*				
G	2.000 ± 0.005	1.400 ± 0.005	1.000 ± 0.005	0.700 ± 0.005	0.500 ± 0.005
D	0.500 ± 0.010	0.350 ± 0.007	0.250 ± 0.005	0.175 ± 0.005	0.125 ± 0.005
R	$\frac{3}{8}$ (min.)	$\frac{1}{4}$ (min.)	$\frac{3}{16}$ (min.)	$\frac{3}{32}$ (min.)	$\frac{3}{32}$ (min.)
A	$2\frac{1}{4}$ (min.)	$1\frac{3}{4}$ (min.)	$1\frac{1}{4}$ (min.)	$\frac{3}{4}$ (min.)	$\frac{5}{8}$ (min.)
*T**	0.71 & greater	0.50–0.70	0.35–0.49	0.25–0.34	0.18–0.24

* Thickness of the section from the wall of the pipe from which the tensile specimen is to be machined.

Note 1. The reduced section (A) may have a gradual taper from the ends toward the center with the ends not more than 0.005 in. larger in diameter than the center on the standard specimen and not more than 0.003 in. larger in diameter than the center on the small size specimens.

Note 2. If desired, on the small size specimens the length of the reduced section may be increased to accommodate an extensometer. However, reference marks for the measurement of elongation should nevertheless be spaced at the indicated gage length (G).

Note 3. The gage length and fillets shall be as shown, but the ends may be of any form to fit the holders of the testing machine in such a way that the load shall be axial. If the ends are to be held in grips it is desirable, if possible, to make the length of the grip section great enough to allow the specimen to extend into the grips a distance equal to two thirds or more of the length of the grips.

TABLE 51.1—*Selection Table for Ductile-Iron Pipe** (*contd.*)

Size *in.*	Rated Working Pressure *psi*	Thickness Class	Thickness *in.*	OD *in.*	Push-On Joint, Laying Length—*ft* 18: Wt. Per Length† *lb*	Push-On Joint 18: Avg. Wt. Per Ft‡ *lb*	Push-On Joint 20: Wt. Per Length† *lb*	Push-On Joint 20: Avg. Wt. Per Ft‡ *lb*	Mechanical Joint 18: Wt. Per Length† *lb*	Mechanical Joint 18: Avg. Wt. Per Ft‡ *lb*	Mechanical Joint 20: Wt. Per Length† *lb*	Mechanical Joint 20: Avg. Wt. Per Ft‡ *lb*
12-ft Cover												
3§	350	2	0.28	3.96	190	10.5	210	10.4	190	10.5	210	10.4
4	350	2	0.29	4.80	240	13.4	265	13.3	245	13.5	270	13.4
6	350	2	0.31	6.90	380	21.0	415	20.8	375	20.8	415	20.7
8	350	2	0.33	9.05	535	29.7	590	29.5	530	29.3	585	29.2
10	350	2	0.35	11.10	700	38.9	775	38.6	690	38.4	765	38.2
12	350	2	0.37	13.20	885	49.0	975	48.7	870	48.3	960	48.0
14	350	1	0.36	15.30	1,005	55.9	1,110	55.5	1,005	55.9	1,110	55.5
16	350	2	0.40	17.40	1,270	70.6	1,400	70.1	1,270	70.6	1,400	70.0
18	350	2	0.41	19.50	1,465	81.4	1,615	80.8	1,465	81.4	1,615	80.8
20	300	2	0.42	21.60	1,670	92.7	1,840	92.0	1,670	92.8	1,840	92.0
24	300	3	0.47	25.80	2,225	123.7	2,455	122.8	2,235	124.1	2,460	123.1
30	300	4	0.55	32.00			3,490	174.4			3,555	177.7
36	300	4	0.63	38.30			4,780	238.9			4,870	243.6
42	300	4	0.71	44.50			6,240	312.0			6,385	319.2
48	300	4	0.79	50.80			7,910	395.6			6,580‖	411.4‖
16-ft Cover												
3§	350	2	0.28	3.96	190	10.5	210	10.4	190	10.5	210	10.4
4	350	2	0.29	4.80	240	13.4	265	13.3	245	13.5	270	13.4
6	350	2	0.31	6.90	380	21.0	415	20.8	375	20.8	415	20.7
8	350	2	0.33	9.05	535	29.7	590	29.5	530	29.3	585	29.2
10	350	2	0.35	11.10	700	38.9	775	38.6	690	38.4	765	38.2
12	350	2	0.37	13.20	885	49.0	975	48.7	870	48.3	960	48.0
14	350	3	0.42	15.30	1,160	64.3	1,280	63.9	1,160	64.3	1,280	63.9
16	350	3	0.43	17.40	1,355	75.3	1,495	74.8	1,355	75.3	1,495	74.8
18	350	3	0.44	19.50	1,565	86.8	1,725	86.2	1,560	86.8	1,725	86.2
20	350	4	0.48	21.60	1,885	104.7	2,080	104.0	1,885	104.8	2,080	104.0
24	350	5	0.53	25.80	2,485	138.1	2,745	137.2	2,490	138.5	2,750	137.5
30	350	6	0.63	32.00			3,965	198.2			4,030	201.4
36	350	6	0.73	38.30			5,490	274.5			5,585	279.2
42	350	6	0.83	44.50			7,230	361.4			7,375	368.6
48	350	6	0.93	50.80			9,235	461.7			7,640‖	477.5‖

* The thicknesses in this table are equal to or in excess of those required to withstand the rated working pressures plus a surge allowance of 100 psi.

All pipe shown in this table for the depths of cover indicated are adequate for trench loads including truck superloads under Laying Condition B (flat-bottom trench, without blocks, tamped backfill).

For other depths of cover, rated working pressures, and Laying Condition A, see Table 51.2. For the basis of design see American Standard A21.50.

† Including bell; calculated weight of pipe rounded off to nearest 5 lb.

‡ Including bell; average weight per foot based on calculated weight of pipe before rounding.

§ Pipe of 3-in. size also available in 12-ft laying length. Weight per length† is 130 lb and average weight per foot‡ is 10.8 lb for push-on joint and mechanical-joint pipe.

‖ Based on 16-ft laying length; 48-in. mechanical-joint pipe is available only in 16-ft laying length.

TABLE 51.1

*Selection Table for Ductile-Iron Pipe**

Size *in.*	Rated Working Pressure *psi*	Thickness Class	Thickness *in.*	OD *in.*	Push-On Joint				Mechanical Joint			
					Laying Length—*ft*							
					18		20		18		20	
					Wt. Per Length† *lb*	Avg. Wt. Per Ft‡ *lb*	Wt. Per Length† *lb*	Avg. Wt. Per Ft‡ *lb*	Wt. Per Length† *lb*	Avg. Wt. Per Ft‡ *lb*	Wt. Per Length† *lb*	Avg. Wt. Per Ft‡ *lb*
5-ft Cover												
3§	350	2	0.28	3.96	190	10.5	210	10.4	190	10.5	210	10.4
4	350	2	0.29	4.80	240	13.4	265	13.3	245	13.5	270	13.4
6	350	2	0.31	6.90	380	21.0	415	20.8	375	20.8	415	20.7
8	350	2	0.33	9.05	535	29.7	590	29.5	530	29.3	585	29.2
10	350	2	0.35	11.10	700	38.9	775	38.6	690	38.4	765	38.2
12	350	2	0.37	13.20	885	49.0	975	48.7	870	48.3	960	48.0
14	350	1	0.36	15.30	1,005	55.9	1,110	55.5	1,005	55.9	1,110	55.5
16	350	1	0.37	17.40	1,185	65.8	1,305	65.3	1,185	65.8	1,305	65.2
18	300	1	0.38	19.50	1,370	76.0	1,510	75.4	1,365	76.0	1,505	75.4
20	250	1	0.39	21.60	1,560	86.7	1,720	86.0	1,560	86.8	1,720	86.0
24	250	1	0.41	25.80	1,970	109.4	2,170	108.5	1,975	109.8	2,175	108.8
30	200	1	0.43	32.00			2,775	138.7			2,840	141.9
36	200	1	0.48	38.30			3,705	185.3			3,800	190.0
42	200	1	0.53	44.50			4,740	237.0			4,885	244.2
48	200	1	0.58	50.80			5,915	295.8			4,985‖	311.6‖
8-ft Cover												
3§	350	2	0.28	3.96	190	10.5	210	10.4	190	10.5	210	10.4
4	350	2	0.29	4.80	240	13.4	265	13.3	245	13.5	270	13.4
6	350	2	0.31	6.90	380	21.0	415	20.8	375	20.8	415	20.7
8	350	2	0.33	9.05	535	29.7	590	29.5	530	29.3	585	29.2
10	350	2	0.35	11.10	700	38.9	775	38.6	690	38.4	765	38.2
12	350	2	0.37	13.20	885	49.0	975	48.7	870	48.3	960	48.0
14	350	1	0.36	15.30	1,005	55.9	1,110	55.5	1,005	55.9	1,110	55.5
16	350	1	0.37	17.40	1,185	65.8	1,305	65.3	1,185	65.8	1,305	65.2
18	300	1	0.38	19.50	1,370	76.0	1,510	75.4	1,365	76.0	1,505	75.4
20	250	1	0.39	21.60	1,560	86.7	1,720	86.0	1,560	86.8	1,720	86.0
24	250	1	0.41	25.80	1,970	109.4	2,170	108.5	1,975	109.8	2,175	108.8
30	250	2	0.47	32.00			3,015	150.7			3,080	153.9
36	250	2	0.53	38.30			4,065	203.2			4,160	207.9
42	250	2	0.59	44.50			5,245	262.2			5,385	269.4
48	200	2	0.65	50.80			6,585	329.2			5,520‖	345.0‖

* The thicknesses in this table are equal to or in excess of those required to withstand the rated working pressures plus a surge allowance of 100 psi.

All pipe shown in this table for the depths of cover indicated are adequate for trench loads including truck superloads under Laying Condition B (flat-bottom trench, without blocks, tamped backfill).

For other depths of cover, rated working pressures, and Laying Condition A, see Table 51.2. For the basis of design see American Standard A21.50.

† Including bell; calculated weight of pipe rounded off to nearest 5 lb.

‡ Including bell; average weight per foot based on calculated weight of pipe before rounding.

§ Pipe of 3-in. size also available in 12-ft laying length. Weight per length† is 130 lb and average weight per foot‡ is 10.8 lb for push-on joint and mechanical-joint pipe.

‖ Based on 16-ft laying length; 48-in. mechanical-joint pipe is available only in 16-ft laying length.

Impact Value (corrected)

$$= \frac{0.40}{t} \times \text{Impact Value (actual)}$$

in which t is the thickness of the specimen in inches (wall thickness of pipe).

The Charpy test machine anvil shall not be moved to compensate for the variation of cross section dimensions of the test specimen.

51–12.2.1. *Acceptance value.* The corrected acceptance value for notched

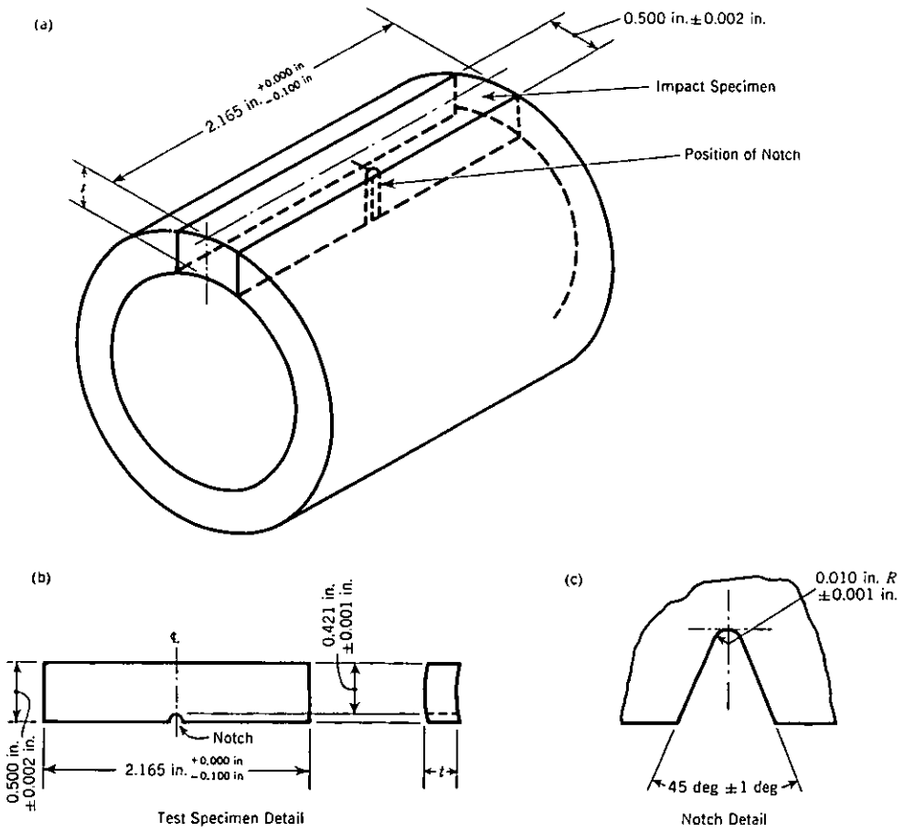

Fig. 51.2. Impact Test Specimen

In Diagrams (a) and (b) the symbol "t" is for the pipe wall thickness.

impact test specimens shall be a minimum of 7 ft-lb for tests conducted at 70°F ± 10°.

51–12.3. *Sampling.* At least one tensile and impact sample shall be taken during each casting period of approximately 3 hr. Samples shall be selected to properly represent extremes of pipe diameters and thicknesses.

Sec. 51–13—Additional Control Tests by Manufacturer

Low-temperature impact tests shall be made from at least one-third of the test pipe specified in Sec. 51–12.3 to insure compliance with a minimum corrected value of 3 ft-lb for tests conducted at −40°F. Test specimens shall be prepared and tested in accordance with Sec. 51–12.2.

In addition, the manufacturer shall conduct such other control tests as necessary to insure continuing compliance with this standard.

Sec. 51–14—Foundry Records

The results of the acceptance tests (Sec. 51–12) and low-temperature impact tests (Sec. 51–13) shall be recorded and retained for 1 year, and shall be available to the purchaser at the foundry. Written transcripts shall be furnished, if specified on the purchase order.

Sec. 51–15—Additional Tests Required by Purchaser

When tests other than those required in this standard are required by the purchaser, such tests shall be specified in the invitation for bids and on the purchase order.

Sec. 51–16—Defective Specimens and Retests

When any physical-test specimen shows defective machining or lack of continuity of metal, it shall be discarded and replaced by another specimen. When any sound test specimen fails to meet the specified requirements, the pipe from which it was taken shall be rejected, and a retest may be made on two additional sound specimens from pipe cast in the same casting period as the specimen that failed. Both of the additional specimens shall meet the prescribed tests to qualify the pipe produced in that casting period.

Sec. 51–17—Rejection of Pipe

If the results of any physical acceptance test fail to meet the requirements of Sec. 51–12 or Sec. 51–16, the pipe cast in the same casting period shall be rejected except as provided in Sec. 51–18.

Sec. 51–18—Determining Rejection

The manufacturer may determine the amount of rejection by making similar additional tests of pipe, of the same size as that rejected, until the rejected lot is bracketed, in order of manufacture, by an acceptable test at each end of the interval in question. When pipe of one size is rejected from a casting period, the acceptability of pipe of different sizes from that same period may be established by making the acceptance tests for these sizes as specified in Section 51–12.

Index to Tables

Standard

TABLE PAGE

51.1—*Selection Table for Ductile-Iron Pipe* 8
51.2—*Standard Thickness Selection Table for Ductile-Iron Pipe* 10
51.3—*Standard Dimensions and Weights of Push-On Joint Ductile-Iron Pipe* 12
51.4—*Standard Dimensions and Weights of Mechanical-Joint Ductile-Iron Pipe* 14

Appendix

A—*Pipe Thicknesses Required for Different Tap Sizes With ASA B2.1 Standard Taper Pipe Threads With 2, 3, and 4 Full Threads* 16
B—*Pipe Thicknesses Required for Different Tap Sizes With AWWA C800 Standard Corporation Stop Threads With 2, 3, and 4 Full Threads* 17

ASA A21.52

AMERICAN STANDARD FOR DUCTILE-IRON PIPE, CENTRIFUGALLY CAST, IN METAL MOLDS OR SAND-LINED MOLDS FOR GAS

ASA A21.52

UDC 621.774.1

ASA
A21.52—1965

AMERICAN STANDARD
for
DUCTILE-IRON PIPE, CENTRIFUGALLY CAST, IN METAL MOLDS OR SAND-LINED MOLDS FOR GAS

SPONSORS

AMERICAN GAS ASSOCIATION, INC.
AMERICAN SOCIETY FOR TESTING AND MATERIALS
AMERICAN WATER WORKS ASSOCIATION
NEW ENGLAND WATER WORKS ASSOCIATION

Approved May 10, 1965

AMERICAN STANDARDS ASSOCIATION
Incorporated

Printed in U.S.A.

American Standard

An American Standard implies a consensus of those substantially concerned with its scope and provisions. The consensus principle extends to the initiation of work under the procedure of the Association, to the method of work to be followed, and to the final approval of the standard.

An American Standard is intended as a guide to aid the manufacturer, the consumer, and the general public. The existence of an American Standard does not in any respect preclude any party who has approved of the standard from manufacturing, selling, or using products, processes, or procedures not conforming to the standard.

An American Standard defines a product, process, or procedure with reference to one or more of the following: nomenclature, composition, construction, dimensions, tolerances, safety, operating characteristics, performance, quality, rating, certifitation, testing, and the service for which designed.

American Standards are subject to periodic review. They are reaffirmed or revised to meet changing economic conditions and technological progress. Users of American Standards are cautioned to secure the latest editions.

Producers of goods made in conformity with an American Standard are encouraged to state on their own responsibility in advertising, promotion material, or on tags or labels, that the goods are produced in conformity with particular American Standards. The inclusion in such advertising and promotion media, or on tags or labels, of information concerning the characteristics covered by the standard to define its scope is also encouraged.

APPENDIX *(Cont'd.)*

Pipe Size	No. of Threads	Tap Sizes									
		½"	¾"	1"	1¼"	1½"	2"	2½"	3"	3½"	4"
14"	2	.15	.16	.20	.22	.23	.26	.38	.45	.51	.58
	3	.23	.24	.29	.31	.32	.35	.50	.58	.64	.70
	4	.30	.31	.38	.40	.41	.44	.63	.70	.76	.83
16"	2	.15	.16	.20	.21	.22	.25	.37	.43	.48	.54
	3	.23	.24	.29	.30	.31	.34	.50	.56	.60	.66
	4	.30	.31	.38	.39	.40	.43	.62	.68	.73	.79
18"	2	.15	.15	.19	.21	.22	.24	.35	.41	.46	.51
	3	.23	.23	.28	.30	.31	.33	.48	.54	.58	.64
	4	.30	.30	.37	.39	.40	.42	.60	.66	.71	.76
20"	2	.15	.15	.19	.20	.21	.23	.34	.39	.44	.49
	3	.23	.23	.28	.29	.30	.32	.46	.52	.56	.62
	4	.30	.30	.37	.38	.39	.41	.59	.64	.69	.74
24"	2	.14	.15	.19	.20	.21	.22	.32	.37	.40	.45
	3	.22	.23	.28	.29	.30	.31	.44	.50	.52	.58
	4	.29	.30	.37	.38	.39	.40	.57	.62	.65	.70
30"	2	.14	.15	.19	.19	.20	.21	.31	.34	.37	.41
	3	.22	.23	.28	.28	.29	.30	.44	.46	.50	.54
	4	.29	.30	.37	.37	.38	.39	.56	.59	.62	.66
36"	2	.14	.14	.18	.19	.20	.21	.30	.33	.35	.38
	3	.22	.22	.27	.28	.29	.30	.42	.46	.48	.50
	4	.29	.29	.36	.37	.38	.39	.55	.58	.60	.63
42"	2	.14	.14	.18	.19	.19	.20	.29	.32	.34	.36
	3	.22	.22	.27	.28	.28	.29	.42	.44	.46	.48
	4	.29	.29	.36	.37	.37	.38	.54	.57	.59	.61
48"	2	.14	.14	.18	.18	.19	.20	.29	.31	.32	.35
	3	.22	.22	.27	.27	.28	.29	.42	.44	.44	.48
	4	.29	.29	.36	.36	.37	.38	.54	.56	.57	.60

APPENDIX

This appendix is for information and is not a part of A21.52 American Standard for Ductile-Iron Pipe, Centrifugally Cast, in Metal Molds or Sand-Lined Molds for Gas.

PIPE THICKNESSES REQUIRED FOR DIFFERENT TAP SIZES USING AMERICAN STANDARD B2.1 STANDARD TAPER PIPE THREADS WITH 2, 3 AND 4 FULL THREADS

		Tap Sizes									
Pipe Size	No. of Threads	½"	¾"	1"	1¼"	1½"	2"	2½"	3"	3½"	4"
3"	2	.18	.21	.28							
	3	.26	.29	.37							
	4	.33	.36	.46							
4"	2	.17	.19	.26	.31						
	3	.25	.27	.35	.40						
	4	.32	.34	.44	.49						
6"	2	.17	.18	.23	.27	.30					
	3	.25	.26	.32	.36	.39					
	4	.32	.33	.41	.45	.48					
8"	2	.16	.17	.22	.24	.27	.33				
	3	.24	.25	.31	.33	.36	.42				
	4	.31	.32	.40	.42	.45	.51				
10"	2	.15	.17	.21	.23	.25	.30	.44			
	3	.23	.25	.30	.32	.34	.39	.56			
	4	.30	.32	.39	.41	.43	.48	.69			
12"	2	.15	.16	.20	.22	.24	.28	.40	.48		
	3	.23	.24	.29	.31	.33	.37	.52	.60		
	4	.30	.31	.38	.40	.42	.46	.65	.73		

Foreword

(This Foreword is for information and is not a part of American Standard for Ductile-Iron Pipe Centrifugally Cast, in Metal Molds or Sand-Lined Molds for Gas, A21.52-1965).

In 1926, the ASA Sectional Committee A21 on Cast-Iron Pipe and Fittings was organized. The sponsor societies were the American Gas Association, the American Society for Testing and Materials, the American Water Works Association, and the New England Water Works Association. Sectional Committee A21 was assigned the following scope:

Unification of specifications for cast-iron pipe including materials, dimensions, pressure ratings, methods of manufacture (including such new developments as centrifugal casting) insofar as they may be necessary to secure satisfactory specifications, elimination of unnecessary sizes and varieties, consideration of the possibility of developing a coordinated scheme of metallic pipe and fittings applicable to all common mediums, and methods of making up joints insofar as they are determining as to the dimensional design of cast-iron pipe.

The types of cast-iron pipe to include bell and spigot pipe, flanged pipe, flanged and bell mouth fittings and wall castings, pipe elbows, tees, wyes, return bends, and other fittings not now included in standard lists; cast-iron pipe threaded for flanges or couplings. The standardization is not to include methods of installing pipe and similar matters, except as to the making up of joints in its relationship to the dimensional standardization of pipe and fittings, as noted above.

In 1958 Sectional Committee A21 was reorganized and subcommittees were established to study each group of standards in accordance with the review and revision policy of the American Standards Association.

Subcommittee No. 1—Pipe, was organized with the following scope:

The scope of the committee activity shall include an examination of all present A21 standards for pipe to determine what is needed to bring these up to date. The examination shall include A21.1, A21.2, A21.3, A21.6, A21.7, A21.8, A21.9, as well as any other matters pertaining to pipe standards.

The American Gas Association Subcommittee on Cast-Iron Pipe Standards, at a meeting in July 1957, began consideration of the design of ductile-iron pipe for gas service and of standards for such pipe. At that time, ductile-iron pipe was a relatively new product being used by a number of companies and purchased in accordance with manufacturer's and user's standards. After the reorganization of Sectional Committee A21 in 1958, the AGA Subcommittee on Cast-Iron Pipe Standards recommended that A21 prepare standards for ductile-iron pipe and fittings. Therefore, in 1964, Subcommittee 1—Pipe, operating within the scope of its activities, submitted a proposed standard for 3"-24" ductile-iron pipe for gas to Sectional Committee A21. The pipe in this standard were designed by the method in A21.50 American Standard Practice Manual for the Thickness Design of Ductile-Iron Pipe.

Ductile iron is usually defined as cast iron with the primary graphite in the nodular or spherulitic form. The 60-42-10 grade, with the matrix predominantly ferrite, is specified for ductile-iron pipe covered by this standard. This grade of ductile iron is used for pipe because of its high strength and ductility as well as its resistance to impact and corrosion.

Cast-iron glands, in accordance with American Standard A21.11 of latest revision, are specified for use with standard mechanical-joint ductile-iron pipe in this standard. Since 1953, when American Standard A21.11 was first published, such glands have proved to be satisfactory for use with cast-iron pipe for water or other liquids at a maximum working pressure of 350 pounds per square inch. Because of this excellent service record, and because neither additional strength nor ductility are required for the service intended by the standard, cast-iron glands are specified for use with this ductile-iron pipe.

Ductile-iron pipe may be tapped for threaded connections with the equipment normally used for tapping gray-iron pipe. Consideration should be given to pipe wall thickness and tap size to insure serviceable threaded connections. Service conditions should indicate the extent of full-thread engagement necessary and the necessity for use of outside-sealing corporation stops, tapping saddles or other fixtures. To facilitate checking the number of threads for taps of various sizes in different pipe thicknesses an appropriate table is provided in the Appendix.

The fittings covered by American Standard A21.10 are dimensionally compatible with the pipe covered by this standard.

Options

This standard includes certain options which, if desired, must be specified on the purchase order. Also, a number of items must be specified to describe completely the pipe required. The following summarizes these details and available options and lists the sections of the standard where they may be found:

Pipe Details and Options	*References*
1. Size, thickness or class, and laying length	Tables
2. Special joints	Sec. 52-3.1
3. Certification by manufacturer	Sec. 52-4
4. Inspection by purchaser	Sec. 52-5
5. Coating	Sec. 52-8.1
6. Special Coating	Sec. 52-8.2
7. Special marking on pipe	Sec. 52-11
8. Written transcripts of foundry records	Sec. 52-14
9. Special tests	Sec. 52-15

TABLE 3 *(Cont'd.)*

Standard Dimensions and Weights of Mechanical-Joint Ductile-Iron Pipe

Size, in.	Thickness Class	Thickness	OD	Weight of Barrel per Foot	Weight of Bell	Weight Based on 18-ft Laying Length: Per Length†	Weight Based on 18-ft Laying Length: Avg. per Foot*	Weight Based on 20-ft Laying Length: Per Length†	Weight Based on 20-ft Laying Length: Avg. per Foot*
		in.		lb.					
12	2	0.37	13.20	45.6	49	870	48.3	960	48.0
	3	0.40	13.20	49.2	49	935	51.9	1035	51.7
	4	0.43	13.20	52.8	49	1000	55.5	1105	55.2
	5	0.46	13.20	56.3	49	1060	59.0	1175	58.8
	6	0.49	13.20	59.9	49	1125	62.6	1245	62.3
14	1	0.36	15.30	51.7	76	1005	55.9	1110	55.5
	2	0.39	15.30	55.9	76	1080	60.1	1195	59.7
	3	0.42	15.30	60.1	76	1160	64.3	1280	63.9
	4	0.45	15.30	64.2	76	1230	68.4	1360	68.0
	5	0.48	15.30	68.4	76	1305	72.6	1445	72.2
	6	0.51	15.30	72.5	76	1380	76.7	1525	76.3
16	1	0.37	17.40	60.6	93	1185	65.8	1305	65.2
	2	0.40	17.40	65.4	93	1270	70.6	1400	70.0
	3	0.43	17.40	70.1	93	1355	75.3	1495	74.8
	4	0.46	17.40	74.9	93	1440	80.1	1590	79.6
	5	0.49	17.40	79.7	93	1530	84.9	1685	84.3
	6	0.52	17.40	84.4	93	1610	89.6	1780	89.0
18	1	0.38	19.50	69.8	111	1365	76.0	1505	75.4
	2	0.41	19.50	75.2	111	1465	81.4	1615	80.8
	3	0.44	19.50	80.6	111	1560	86.8	1725	86.2
	4	0.47	19.50	86.0	111	1660	92.2	1830	91.6
	5	0.50	19.50	91.3	111	1755	97.5	1935	96.8
	6	0.53	19.50	96.7	111	1850	102.9	2045	102.2
20	1	0.39	21.60	79.5	131	1560	86.8	1720	86.0
	2	0.42	21.60	85.5	131	1670	92.8	1840	92.0
	3	0.45	21.60	91.5	131	1780	98.8	1960	98.0
	4	0.48	21.60	97.5	131	1885	104.8	2080	104.0
	5	0.51	21.60	103.4	131	1990	110.7	2200	110.0
	6	0.54	21.60	109.3	131	2100	116.6	2315	115.8
24	1	0.41	25.80	100.1	174	1975	109.8	2175	108.8
	2	0.44	25.80	107.3	174	2105	117.0	2320	116.0
	3	0.47	25.80	114.4	174	2235	124.1	2460	123.1
	4	0.50	25.80	121.6	174	2365	131.3	2605	130.3
	5	0.53	25.80	128.8	174	2490	138.5	2750	137.5
	6	0.56	25.80	135.9	174	2620	145.6	2890	144.6

†Including bell. Calculated weight of pipe rounded off to nearest 5 lb.
*Including bell. Average weight, per foot, based on calculated weight of pipe before rounding.

TABLE 3

Standard Dimensions and Weights of Mechanical-Joint Ductile-Iron Pipe

Size, in.	Thickness Class	Thickness	OD	Weight of Barrel per Foot	Weight of Bell	Weight Based on 18-ft Laying Length: Per Length†	Weight Based on 18-ft Laying Length: Avg. per Foot*	Weight Based on 20-ft Laying Length: Per Length†	Weight Based on 20-ft Laying Length: Avg. per Foot*
		in.		lb.					
3**	2	0.28	3.96	9.9	11	190	10.5	210	10.4
	3	0.31	3.96	10.9	11	205	11.5	230	11.4
	4	0.34	3.96	11.8	11	225	12.4	245	12.4
	5	0.37	3.96	12.8	11	240	13.4	265	13.4
	6	0.40	3.96	13.7	11	260	14.3	285	14.2
4	2	0.29	4.80	12.6	16	245	13.5	270	13.4
	3	0.32	4.80	13.8	16	265	14.7	290	14.6
	4	0.35	4.80	15.0	16	285	15.9	315	15.8
	5	0.38	4.80	16.1	16	305	17.0	340	16.9
	6	0.41	4.80	17.3	16	325	18.2	360	18.1
6	2	0.31	6.90	19.6	22	375	20.8	415	20.7
	3	0.34	6.90	21.4	22	405	22.6	450	22.5
	4	0.37	6.90	23.2	22	440	24.4	485	24.3
	5	0.40	6.90	25.0	22	470	26.2	520	26.1
	6	0.43	6.90	26.7	22	505	27.9	555	27.8
8	2	0.33	9.05	27.7	29	530	29.3	585	29.2
	3	0.36	9.05	30.1	29	570	31.7	630	31.6
	4	0.39	9.05	32.5	29	615	34.1	680	34.0
	5	0.42	9.05	34.8	29	655	36.4	725	36.2
	6	0.45	9.05	37.2	29	700	38.8	775	38.6
10	2	0.35	11.10	36.2	39	690	38.4	765	38.2
	3	0.38	11.10	39.2	39	745	41.4	825	41.2
	4	0.41	11.10	42.1	39	795	44.3	880	44.0
	5	0.44	11.10	45.1	39	850	47.3	940	47.0
	6	0.47	11.10	48.0	39	905	50.2	1000	50.0

†Including bell. Calculated weight of pipe rounded off to nearest 5 lb.
*Including bell. Average weight, per foot, based on calculated weight of pipe before rounding.
**Pipe of 3-in. size also available in 12-ft laying length with following weights:

Thickness Class	Thickness, in.	Weight (lb.) Per Length†	Weight (lb.) Avg. per Foot*
2	0.28	130	10.8
3	0.31	140	11.8
4	0.34	155	12.7
5	0.37	165	13.7
6	0.40	175	14.6

Committee Personnel

Subcommittee No. 1—Pipe, which developed this standard had the following personnel at that time:

J. THOMPSON VANN, *Chairman*
EDWIN B. COBB, *Vice-Chairman*

User Members:

FRANK E. DOLSON
HARRY P. HAGEDORN
RICHMOND C. HOLCOMBE
ROLF H. JENSEN
ROBERT C. KAUFFMAN
GEORGE F. KEENAN
LORING E. TABOR
WILLIAM J. TOWNER

Producer Members:

CARL A. HENRIKSON
ARTHUR ROBERTS, JR.
CHARLES C. SALVAGE
SIDNEY P. TEAGUE

The Sectional Committee A21 on cast-iron pipe and fittings which reviewed and approved this A21.52 standard had the following personnel at the time of approval.

EDWIN B. COBB, *Chairman*
HERBERT W. STUART, *Vice-Chairman*
JAMES B. RAMSEY, *Secretary*

Organization Represented	*Name of Representative*
American Gas Association	RICHMOND C. HOLCOMBE
American Society of Civil Engineers	KENNETH W. HENDERSON
American Society of Mechanical Engineers	LOUIS R. HOWSON
American Society for Testing & Materials	HARRY P. HAGEDORN
American Water Works Association	VANCE C. LISCHER
Cast Iron Pipe Research Association	WALLACE T. MILLER
	HERBERT W. STUART
	J. THOMPSON VANN
Individual Producers	RICHARD T. VERHALEN
	WILLIAM T. MAHER
Manufacturers' Standardization Society of the Valve and Fittings Industry	EMIL J. BARTHOLET
New England Water Works Association	EDWIN B. COBB
Standardization Division — General Services Administration	ROBERT E. LYONS
Member at Large	ROLF H. JENSEN
********	
Canadian Standards Association, Liaison	ROBERT C. SHNAY

Table of Contents

Standard pp. 1-4

	Section		Section
Scope	52-1	Air Test	52-10
Definitions	52-2	Marking Pipe	52-11
General Requirements	52-3	Acceptance Tests	52-12
Inspection and Certification by Manufacturer	52-4	Additional Control Tests by Manufacturer	52-13
Inspection by Purchaser	52-5	Foundry Records	52-14
Delivery and Acceptance	52-6	Additional Tests Required by Purchaser	52-15
Tolerances or Permitted Variations	52-7	Defective Specimens and Retests	52-16
Coating	52-8	Rejection of Pipe	52-17
Hydrostatic Test	52-9	Determining Rejection	52-18

Figures pp. 5-6

Figure 1 Tensile Test Specimen

Figure 2 Impact Test Specimen

Tables pp. 7-11

Table 1 Selection Table for Mechanical-Joint Ductile-Iron Pipe.

Table 2 Standard Thickness Selection Table for Ductile-Iron Pipe.

Table 3 Standard Dimensions and Weights of Mechanical-Joint Ductile-Iron Pipe.

Appendix pp. 12-13

Appendix Pipe Thicknesses Required for Different Tap Sizes Using American Standard B2.1 Standard Taper Pipe Threads with 2, 3 and 4 Full Threads.

TABLE 2

Standard Thickness Selection Table for Ductile-Iron Pipe

Laying Condition A — flat-bottom trench, without blocks, untamped backfill
Laying Condition B — flat-bottom trench, without blocks, tamped backfill

The thicknesses in this table are equal to or in excess of those required to withstand 250 psi working pressure.

All thicknesses shown in this table for the depths of cover indicated are adequate for trench loads including truck superloads.

For the basis of design see ASA A21.50.

Thread engagement in taps for service connections and bag holes may require consideration in selecting pipe thicknesses. See Appendix.

Size, in.	Laying Condition	Depth of Cover-ft							
		2½	3½	5	8	12	16	20	24
3	A	0.28	0.28	0.28	0.28	0.28	0.28	0.28	0.28
	B	0.28	0.28	0.28	0.28	0.28	0.28	0.28	0.28
4	A	0.29	0.29	0.29	0.29	0.29	0.29	0.29	0.29
	B	0.29	0.29	0.29	0.29	0.29	0.29	0.29	0.29
6	A	0.31	0.31	0.31	0.31	0.31	0.31	0.31	0.31
	B	0.31	0.31	0.31	0.31	0.31	0.31	0.31	0.31
8	A	0.33	0.33	0.33	0.33	0.33	0.33	0.33	0.33
	B	0.33	0.33	0.33	0.33	0.33	0.33	0.33	0.33
10	A	0.35	0.35	0.35	0.35	0.35	0.35	0.38	0.38
	B	0.35	0.35	0.35	0.35	0.35	0.35	0.38	0.38
12	A	0.37	0.37	0.37	0.37	0.37	0.37	0.40	0.43
	B	0.37	0.37	0.37	0.37	0.37	0.37	0.40	0.40
14	A	0.36	0.36	0.36	0.36	0.39	0.42	0.45	0.45
	B	0.36	0.36	0.36	0.36	0.36	0.42	0.42	0.45
16	A	0.37	0.37	0.37	0.37	0.40	0.43	0.46	0.49
	B	0.37	0.37	0.37	0.37	0.40	0.43	0.46	0.49
18	A	0.38	0.38	0.38	0.38	0.41	0.47	0.50	0.53
	B	0.38	0.38	0.38	0.38	0.41	0.44	0.47	0.53
20	A	0.39	0.39	0.39	0.39	0.45	0.48	0.54	
	B	0.39	0.39	0.39	0.39	0.42	0.48	0.51	
24	A	0.44	0.41	0.41	0.44	0.50	0.56		
	B	0.41	0.41	0.41	0.41	0.47	0.53		

TABLE 1 *(Cont'd.)*

Selection Table for Mechanical-Joint Ductile-Iron Pipe

The thicknesses in this table are equal to or in excess of those required to withstand 250 psi working pressure.

All pipe in this table for the depths of cover indicated are adequate for trench loads including truck superloads under laying condition B (flat-bottom trench, without blocks, tamped backfill).

For other depths of cover and laying condition A see Table 2. For the basis of design see American Standard A21.50.

Thread engagement in taps for service connections and bag holes may require consideration in selecting pipe thicknesses. See Appendix.

Size, in.	Thickness Class	Thickness	OD	Weight Based on 18-ft Laying Length: Per Length†	Weight Based on 18-ft Laying Length: Avg. per Foot*	Weight Based on 20-ft Laying Length: Per Length†	Weight Based on 20-ft Laying Length: Avg. per Foot*
		in.		lb			
12-ft. Cover							
3**	2	0.28	3.96	190	10.5	210	10.4
4	2	0.29	4.80	245	13.5	270	13.4
6	2	0.31	6.90	375	20.8	415	20.7
8	2	0.33	9.05	530	29.3	585	29.2
10	2	0.35	11.10	690	38.4	765	38.2
12	2	0.37	13.20	870	48.3	960	48.0
14	1	0.36	15.30	1005	55.9	1110	55.5
16	2	0.40	17.40	1270	70.6	1400	70.0
18	2	0.41	19.50	1465	81.4	1615	80.8
20	2	0.42	21.60	1670	92.8	1840	92.0
24	3	0.47	25.80	2235	124.1	2460	123.1
16-ft. Cover							
3**	2	0.28	3.96	190	10.5	210	10.4
4	2	0.29	4.80	245	13.5	270	13.4
6	2	0.31	6.90	375	20.8	415	20.7
8	2	0.33	9.05	530	29.3	585	29.2
10	2	0.35	11.10	690	38.4	765	38.2
12	2	0.37	13.20	870	48.3	960	48.0
14	3	0.42	15.30	1160	64.3	1280	63.9
16	3	0.43	17.40	1355	75.3	1495	74.8
18	3	0.44	19.50	1560	86.8	1725	86.2
20	4	0.48	21.60	1885	104.8	2080	104.0
24	5	0.53	25.80	2490	138.5	2750	137.5

†Including bell. Calculated weights of pipe rounded off to nearest 5 lb.

*Including bell. Average weight, per foot, based on calculated weight before rounding.

**Pipe of 3-in. size also available in 12-ft laying length. Weight, per length† is 130 lb and average weight, per foot*, is 10.8 lb for all standard depths of cover.

American Standard
for

Ductile-Iron Pipe, Centrifugally Cast, in Metal Molds or Sand-Lined Molds for Gas

52-1 Scope

This standard covers 3 inch through 24 inch ductile-iron pipe, centrifugally cast, in metal molds or sand-lined molds for gas. Characteristics of such pipe with mechanical joints are given in the tables. This standard may be used for pipe with such other types of joints as may be agreed upon at the time of purchase.

52-2 Definitions

Under this standard, the following definitions shall apply:

52–2.1 *Purchaser.* The party entering into a contract or agreement to purchase pipe according to this standard.

52–2.2 *Manufacturer.* The party that produces the pipe.

52–2.3 *Inspector.* The representative of the purchaser, authorized to inspect in behalf of the purchaser, to determine whether or not the pipe meet this standard.

52–2.4 *Mechanical-Joint.* The gasketed and bolted joint as detailed in American Standard A21.11 of latest revision except the nominal thickness of the bell, S, shall not be less than the nominal wall thickness of the pipe.

52-3 General Requirements

52–3.1 Pipe with mechanical joints shall conform to the dimensions and weights shown in the tables in this standard. They also shall conform to the applicable requirements of American Standard A21.11 of latest revision to assure interchangeability. Unless otherwise specified, the mechanical-joint glands shall be cast iron in accordance with American Standard A21.11 of latest revision. Bolts shall conform to the requirements of American Standard A21.11 of latest revision. Pipe with other types of joints shall comply with the joint dimensions and weights agreed upon at the time of purchase, but in all other respects shall fulfill the requirements hereinafter given.

52–3.2 The nominal laying length of the pipe shall be as shown in the tables. A maximum of 20 percent of the total number of pipe of each size of an order may be furnished as much as 24 inches shorter than the nominal laying length. An additional 10 percent may be furnished as much as 6 inches shorter than nominal laying length.

52-4 Inspection and Certification by Manufacturer

52–4.1 The manufacturer shall establish the necessary quality control and inspection practice to assure compliance with this standard.

52–4.2 The manufacturer shall, if required on the purchase order, furnish a sworn statement that the inspection and

all of the specified tests have been made and the results thereof comply with the requirements of this standard.

52-5 Inspection by Purchaser

52–5.1 When the purchaser desires to inspect pipe at the manufacturer's plant, the purchaser shall so specify on the purchase order, stating the conditions (such as time, and the extent of inspection) under which the inspection shall be made.

52–5.2 The inspector shall have free access to those parts of the manufacturer's plant which are necessary to assure compliance with this standard. The manufacturer shall make available for the inspector's use such gages as are necessary for inspection. The manufacturer shall provide the inspector with such handling assistance as necessary.

52-6 Delivery and Acceptance

All pipe and accessories shall comply with this standard. Pipe and accessories not complying with this standard shall be replaced by the manufacturer at the agreed point of delivery. The manufacturer shall not be liable for shortages or damaged pipe after acceptance at the agreed point of delivery except as recorded on the delivery receipt or similar document by the carrier's agent.

52-7 Tolerances or Permitted Variations

52–7.1 *Dimensions.* Pipe and accessories shall be gaged in accordance with the table shown in this standard at sufficiently frequent intervals to assure dimensional control. The inside of the sockets and the outside of the spigot ends shall be tested with circular gages.

52–7.2 *Thickness.* Tolerances below the standard thicknesses of pipe and bell shall not be more than those shown below:

Size, *Inch*	Minus Tolerance, *Inch*
3-8	0.05
10-12	0.06
14-24	0.07

52–7.3 *Weight.* The weight of any single pipe shall not be less than the tabulated weight by more than 5 percent for pipe 12 inches or smaller in diameter, nor by more than 4 percent for pipe larger than 12 inches in diameter.

52-8 Coating

52–8.1 *Standard Outside Coating.* Unless otherwise specified on the purchase order, pipe may be coated on the outside at the manufacturer's option with a bituminous coating of either coal-tar or asphalt base approximately one mil thick. The finished coating shall be continuous, smooth, neither brittle when cold nor sticky when exposed to the sun and shall be strongly adherent to the pipe.

52–8.2 *Special Coating.* For special conditions, other types of coatings may be available. Such special coatings shall be specified in the invitation for bids and on the purchase order.

52-9 Hydrostatic Test

Each pipe shall be subjected to a hydrostatic test of not less than 500 psi. The pipe shall be under the full test pressure for at least 10 seconds. Suitable controls and recording devices shall be provided so that the test pressure and duration may be adequately ascertained. Any pipe that leaks or does not withstand the test pressure shall be rejected.

TABLE 1

Selection Table for Mechanical-Joint Ductile-Iron Pipe

The thicknesses in this table are equal to or in excess of those required to withstand 250 psi working pressure.

All pipe in this table for the depths of cover indicated are adequate for trench loads including truck superloads under laying condition B (flat-bottom trench, without blocks, tamped backfill).

For other depths of cover and laying condition A see Table 2. For the basis of design see American Standard A21.50.

Thread engagement in taps for service connections and bag holes may require consideration in selecting pipe thicknesses. See Appendix.

Size, in.	Thickness Class	Thickness	OD	Weight Based on 18-ft Laying Length: Per Length†	Weight Based on 18-ft Laying Length: Avg. per Foot*	Weight Based on 20-ft Laying Length: Per Length†	Weight Based on 20-ft Laying Length: Avg. per Foot*
		in.		lb			
5-ft. Cover							
3**	2	0.28	3.96	190	10.5	210	10.4
4	2	0.29	4.80	245	13.5	270	13.4
6	2	0.31	6.90	375	20.8	415	20.7
8	2	0.33	9.05	530	29.3	585	29.2
10	2	0.35	11.10	690	38.4	765	38.2
12	2	0.37	13.20	870	48.3	960	48.0
14	1	0.36	15.30	1005	55.9	1110	55.5
16	1	0.37	17.40	1185	65.8	1305	65.2
18	1	0.38	19.50	1365	76.0	1505	75.4
20	1	0.39	21.60	1560	86.8	1720	86.0
24	1	0.41	25.80	1975	109.8	2175	108.8
8-ft. Cover							
3**	2	0.28	3.96	190	10.5	210	10.4
4	2	0.29	4.80	245	13.5	270	13.4
6	2	0.31	6.90	375	20.8	415	20.7
8	2	0.33	9.05	530	29.3	585	29.2
10	2	0.35	11.10	690	38.4	765	38.2
12	2	0.37	13.20	870	48.3	960	48.0
14	1	0.36	15.30	1005	55.9	1110	55.5
16	1	0.37	17.40	1185	65.8	1305	65.2
18	1	0.38	19.50	1365	76.0	1505	75.4
20	1	0.39	21.60	1560	86.8	1720	86.0
24	1	0.41	25.80	1975	109.8	2175	108.8

†Including bell. Calculated weights of pipe rounded off to nearest 5 lb.

*Including bell. Average weight, per foot, based on calculated weight before rounding.

**Pipe of 3-in. size also available in 12-ft laying length. Weight, per length† is 130 lb and average weight, per foot*, is 10.8 lb for all standard depths of cover.

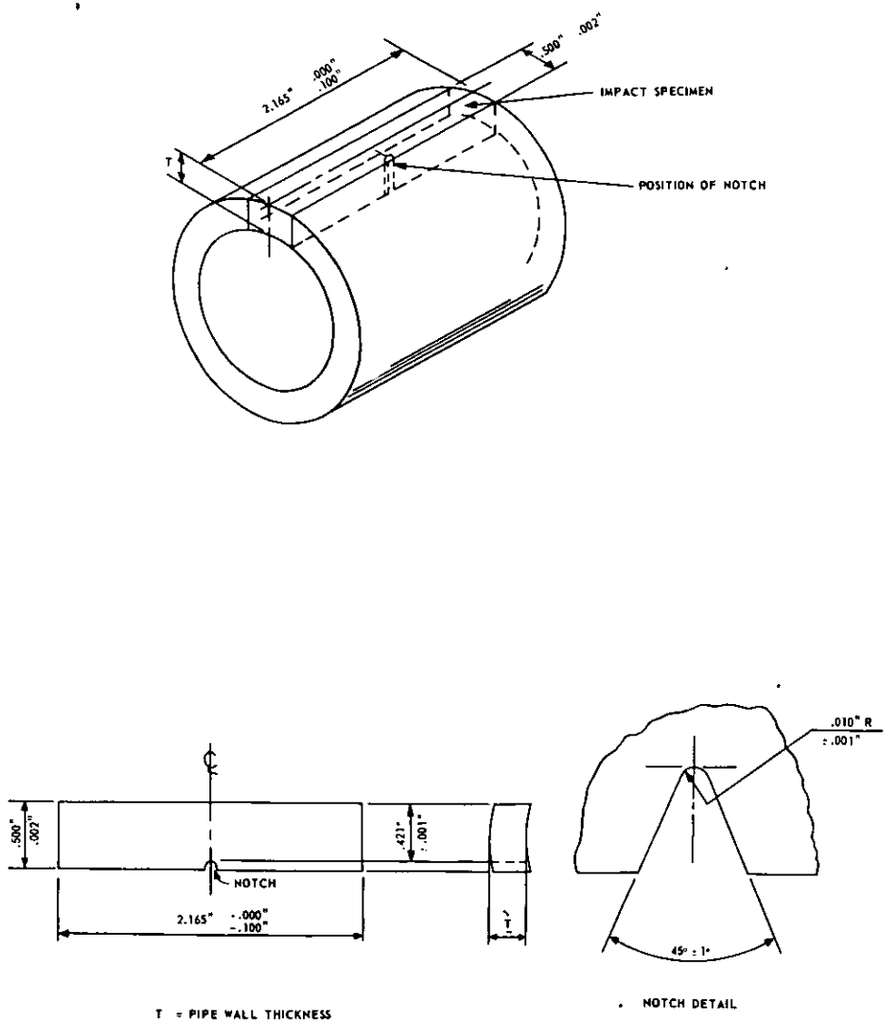

Figure 2—Impact Test Specimen

52-10 Air Test

In addition to the hydrostatic test, each length of pipe and its socket sealing surface shall be subjected to an air test prior to coating. These tests may be made simultaneously or separately at the manufacturer's option. The air test pressure shall be a minimum of 50 psi. The joint sealing surface test shall be made in such a manner as to assure no leakage when the joint is properly assembled. The pipe shall be under the test pressure a sufficient length of time to permit careful inspection for leakage. While under this air pressure, the pipe shall be immersed in water or covered with a soapy water solution. Any length of pipe that leaks shall be rejected.

52-11 Marking Pipe

The weight, class or nominal thickness, and casting period shall be shown on each pipe. The manufacturer's mark, the year in which the pipe was produced and the letters "DI" or "DUCTILE" shall be cast or stamped on the pipe. When specified on the purchase order initials not exceeding four in number shall be cast or stamped on the pipe. All required markings shall be clear and legible and all cast marks shall be on or near the bell.

52-12 Acceptance Tests

The standard acceptance tests for the physical characteristics of the pipe shall be as follows:

52–12.1 *Tensile Test.* A tensile test specimen shall be cut longitudinally from the midsection of the pipe wall. This specimen shall be machined and tested in accordance with Figure 1 and ASTM (American Society for Testing and Materials) designation E8-61T Tension Testing of Metallic Materials. The yield strength shall be determined by either of the 0.2% offset, halt of pointer, or extension under load methods. If check tests are to be made, the 0.2% offset method shall be used. All specimens shall be tested at room temperature (70 ± 10F).

52–12.1.1 *Acceptance Values.* The acceptance values for test specimens shall be as follows:

Grade of Iron	Tensile Strength, Minimum psi	Yield Strength, Minimum psi	Per cent Elongation, Minimum
60-42-10	60,000	42,000	10

52–12.2 *Impact Test.* Tests shall be made in accordance with ASTM designation E23-62 Notched Charpy Tests, except that specimens shall be 0.500 inch and full thickness of pipe wall. The notched impact test specimen shall be in accordance with Figure 2. In cases when the pipe wall thickness exceeds 0.40 inch, the impact specimen may be machined to a nominal thickness of 0.40 inch. In all cases, impact values are to be corrected to 0.40 inch wall thickness by calculation as follows:

$$\text{Impact value corrected} = \frac{0.40 \text{ inch}}{t} \times \text{Impact value actual}$$

where t = thickness of the specimen in inches (wall thickness of pipe).

Charpy test machine anvil shall not be moved to compensate for the variation of cross section dimensions of the test specimen.

52–12.2.1 *Acceptance Value.* The corrected acceptance value for notched impact test specimens shall be a minimum of 7 foot pounds for tests conducted at 70 ± 10 F.

52–12.3 *Sampling.* At least one tensile and impact sample shall be taken during each casting period of approximately three hours. Samples shall be selected to properly represent extremes of pipe diameters and thicknesses.

52-13 Additional Control Tests by Manufacturer

Low temperature impact tests shall be made from at least one-third of the test pipe specified in Section 52–12.3 to assure compliance with a minimum corrected value of 3 foot pounds for tests conducted at –40F. Test specimens shall be prepared and tested in accordance with Section 52–12.2.

In addition, the manufacturer shall conduct such other control tests as necessary to assure continuing compliance with this standard.

52-14 Foundry Records

The results of the following tests shall be recorded and retained for one year and shall be available to the purchaser at the foundry. Written transcripts of the results of the following tests shall be furnished when specified on the purchase order:

Acceptance tests, Section 52-12
Low-temperature impact tests, section 52-13

52-15 Additional Tests Required by Purchaser

When tests other than those provided in this standard are required by the purchaser, such tests shall be specified in the invitation for bids and on the purchase order.

52-16 Defective Specimens and Retests

When any physical test specimen shows defective machining or lack of continuity of metal, it shall be discarded and replaced by another specimen. When any sound test specimen fails to meet the specified requirements, the pipe from which it was taken shall be rejected and a retest may be made on two additional sound specimens from pipe cast in the same casting period as the specimen which failed. Both of the additional specimens shall meet the prescribed tests to qualify the pipe produced in that casting period.

52-17 Rejection of Pipe

When any physical acceptance test fails to meet the requirements of Section 52–12 or Section 52–16, the pipe cast in the same casting period shall be rejected except as subject to the provision of Section 52–18.

52-18 Determining Rejection

The manufacturer may determine the amount of rejection by making similar additional tests of pipe, of the same size as that rejected, until the rejected lot is bracketed, in order of manufacture, by an acceptable test at each end of the interval in question. When pipe of one size is rejected from a casting period, the acceptability of pipe of different sizes from that same period may be established by making the acceptance tests for these sizes as specified in Section 52–12.

DIMENSIONS

	Std. Specimen 0.500″ round	Small Size Specimens Proportional to Standard			
		0.350″ round	0.250″ round	0.175″ round	0.125″ round
G—Gage Length	2.000 ± 0.005″	1.400 ± 0.005″	1.000 ± 0.005″	0.700 ± 0.005″	0.500 ± 0.005″
D—Diameter (Note 1)	0.500 ± 0.010″	0.350 ± 0.007″	0.250 ± 0.005″	0.175 ± 0.005″	0.125 ± 0.005″
R—Radius of Fillet	3/8″, Min.	1/4″, Min.	3/16″, Min.	3/32″, Min.	3/32″, Min.
A—Length of Reduced Section (Note 2)	2 1/4″, Min.	1 3/4″, Min.	1 1/4″, Min.	3/4″, Min.	5/8″, Min.
Thickness of the section from the wall of the pipe from which the tensile specimen is to be machined.	.71″ & Greater	.50″ thru .70″	.35″ thru .49″	.25″ thru .34″	.18″ thru .24″

Note 1. — The reduced section may have a gradual taper from the ends toward the center with the ends not more than 0.005 in. larger in diameter than the center on the standard specimen and not more than 0.003 in. larger in diameter than the center on the small size specimens.

Note 2. — If desired, on the small size specimens the length of the reduced section may be increased to accommodate an extensometer. However, reference marks for the measurement of elongation should nevertheless be spaced at the indicated gage length.

Note 3. — The gage length and fillets shall be as shown, but the ends may be of any form to fit the holders of the testing machine in such a way that the load shall be axial. If the ends are to be held in grips it is desirable, if possible, to make the length of the grip section great enough to allow the specimen to extend into the grips a distance equal to two thirds or more of the length of the grips.

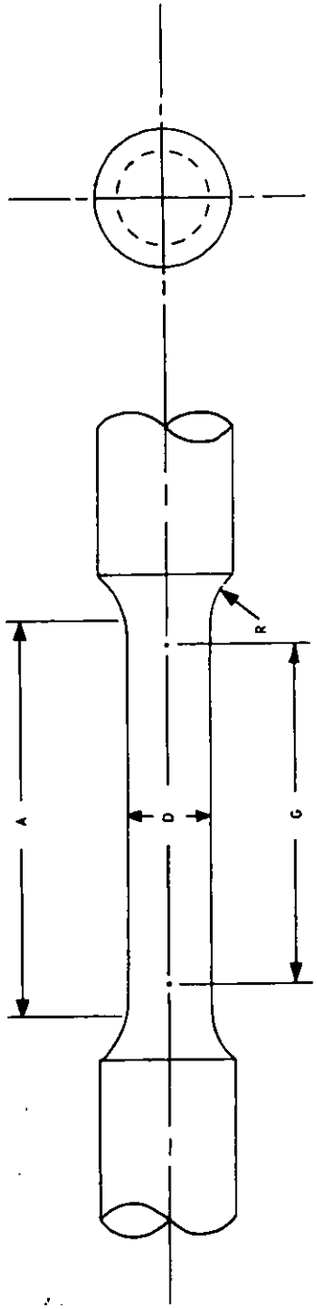

Figure 1—Tensile Test Specimen

SECTION 7

FLANGED PIPE

CIPRA STANDARD FOR FLANGED PIPE WITH THREADED FLANGES

FOREWORD

The flanged joint has two machined surfaces which are tightly bolted together with a gasket between the faces to prevent leakage. This joint is particularly well suited for above ground pipe installations in water and sewage treatment plants, pumping stations, chemical and industrial plants and for other places where rigidity, strength, self-restraint and tightness are required.

The use of the flanged joint facilitates erection and dismantling of piping systems without need of special tools.

The underground use of the flanged joint is generally not desirable due to the rigidity of the joint. Unequal settlement or other stressing of such piping may result in excessive strain on the flanges and consequent failure of the pipe immediately behind the flanges.

Gray Cast Iron Flanged Pipe With Threaded Flanges

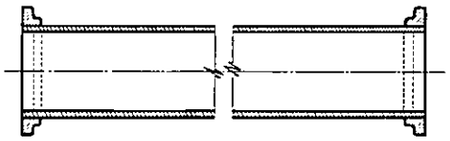

Size	Class or Maximum Working Pressure	Outside Diameter of Pipe In.	Minimum Class Thickness of Pipe In.	Weight Pounds			Weight—with Flanges—Pounds			
				One Flange Only		Per Foot Without Flanges	12-Foot Length		18-Foot Length	
				Class 125	Class 250		Per Ft.	Per Lgth.	Per Ft.	Per Lgth.
3	150	3.96	0.38	7	.....	13.3	14.6	175	14.1	255
3	250	3.96	0.38	7	.....	13.3	14.6	175	14.1	255
3	250	3.96	0.38	.....	12	13.3	15.4	185	14.7	265
4	150	4.80	0.38	13	.....	16.5	18.8	225	18.1	325
4	250	4.80	0.38	13	.....	16.5	18.8	225	18.1	325
4	250	4.80	0.38	.....	20	16.5	20.0	240	18.6	335
6	150	6.90	0.38	17	.....	24.3	27.1	325	26.1	470
6	250	6.90	0.38	17	.....	24.3	27.1	325	26.1	470
6	250	6.90	0.38	.....	34	24.3	30.0	360	28.1	505
8	150	9.05	0.41	27	.....	34.7	39.2	470	37.8	680
8	250	9.05	0.41	27	.....	34.7	39.2	470	37.8	680
8	250	9.05	0.41	.....	50	34.7	42.9	515	40.3	725
10	150	11.10	0.44	38	.....	46.0	52.5	630	50.3	905
10	250	11.10	0.44	38	.....	46.0	52.5	630	50.3	905
10	250	11.10	0.44	.....	70	46.0	57.5	690	53.9	970
12	150	13.20	0.48	58	.....	59.8	69.6	835	66.1	1190
12	250	13.20	0.52	58	.....	64.6	74.2	890	71.1	1280
12	250	13.20	0.52	.....	102	64.6	81.7	980	75.8	1365
14	150	15.30	0.51	72	.....	73.9	85.8	1030	81.9	1475
14	250	15.30	0.59	72	.....	85.1	97.1	1165	93.1	1675
14	250	15.30	0.59	.....	130	85.1	106.7	1280	99.4	1790
16	150	17.40	0.54	90	.....	89.2	104.2	1250	99.2	1785
16	250	17.40	0.63	90	.....	103.6	118.8	1425	113.6	2045
16	250	17.40	0.63	.....	162	103.6	130.4	1565	121.7	2190

Dimensions of Class 125 Flanges, Drilling and Bolts

Nominal Pipe Size	Diameter of Flange	Thickness of Flange	Diameter of Bolt Circle	Number of Bolts	Diameter of Bolts	Diameter of Bolt Holes	Length of Machine Bolts
3	7½	¾	6	4	⅝	¾	2½
4	9	15/16	7½	8	⅝	¾	3
6	11	1	9½	8	¾	⅞	3¼
8	13½	1⅛	11¾	8	¾	⅞	3½
10	16	1 3/16	14¼	12	⅞	1	3¾
12	19	1¼	17	12	⅞	1	3¾
14	21	1⅜	18¾	12	1	1⅛	4¼
16	23½	1 7/16	21¼	16	1	1⅛	4½
18	25	1 9/16	22¾	16	1⅛	1¼	4¾
20	27½	1 11/16	25	20	1⅛	1¼	5
24	32	1⅞	29½	20	1¼	1⅜	5½
30	38¾	2⅛	36	28	1¼	1⅜	6¼
36	46	2⅜	42¾	32	1½	1⅝	7
42	53	2⅝	49½	36	1½	1⅝	7½
48	59½	2¾	56	44	1½	1⅝	7¾
54	66¼	3	62¾	44	1¾	2	8½

All dimensions given in inches.

The 3-in. through 48-in. flanges shown above are in accordance with ASA A21.10. They are adequate for water service of 250 psi working pressure. Drilling and facing are in accordance with American Standard B16.1.

Dimensions of Class 250 Flanges, Drilling and Bolts

Nominal Pipe Size	Diameter of Flange	Thickness of Flange	Diameter of Raised Face	Diameter of Bolt Circle	Diameter of Bolt Holes	Number of Bolts	Size of Bolts	Length of Machine Bolts
3	8¼	1⅛	5 11/16	6⅝	⅞	8	¾	3½
4	10	1¼	6 15/16	7⅞	⅞	8	¾	3¾
6	12½	1 7/16	9 11/16	10⅝	⅞	12	¾	4
8	15	1⅝	11 15/16	13	1	12	⅞	4½
10	17½	1⅞	14 1/16	15¼	1⅛	16	1	5¼
12	20½	2	16 7/16	17¾	1¼	16	1⅛	5½
14	23	2⅛	18 15/16	20¼	1¼	20	1⅛	6
16	25½	2¼	21 1/16	22½	1⅜	20	1¼	6¼
18	28	2⅜	23 5/16	24¾	1⅜	24	1¼	6½
20	30½	2½	25 9/16	27	1⅜	24	1¼	6¾
24	36	2¾	30¼	32	1⅝	24	1½	7¾
30	43	3	37 3/16	39¼	2	28	1¾	8½
36	50	3⅜	43 11/16	46	2¼	32	2	9½
42	57	3 11/16	50 7/16	52¾	2¼	36	2	10¼
48	65	4	58 7/16	60¾	2¼	40	2	10¾

All dimensions given in inches.

Drilling and facing are in accordance with American Standard B16.2.

18	150	19.50	0.58	90	.....	107.6	122.5	1470	117.5	2115
18	250	19.50	0.68	90	.....	125.4	140.4	1685	135.3	2435
18	250	19.50	0.68	.....	200	125.4	158.8	1905	147.5	2655
20	150	21.60	0.62	115	.....	127.5	146.7	1760	140.3	2525
20	250	21.60	0.72	115	.....	147.4	166.7	2000	160.3	2885
20	250	21.60	0.72	.....	245	147.4	188.3	2260	174.7	3145
24	150	25.80	0.73	160	.....	179.4	206.2	2475	197.2	3550
24	250	25.80	0.79	160	.....	193.7	220.4	2645	211.4	3805
24	250	25.80	0.79	.....	370	193.7	255.4	3065	234.7	4225
30	150	32.00	0.85	240	.....	259.5	299.6	3595	286.1	5150
30	250	32.00	0.99	240	.....	300.9	340.8	4090	327.5	5895
30	250	32.00	0.99	.....	530	300.9	389.2	4670	359.7	6475
36	150	38.30	0.94	350	.....	344.2	402.5	4830	383.1	6895
36	250	38.30	1.10	350	.....	401.1	459.6	5515	440.0	7920
36	250	38.30	1.10	.....	710	401.1	519.6	6235	480.0	8640
42	150	44.50	1.05	500	.....	447.2	530.4	6365	502.8	9050
42	250	44.50	1.22	500	.....	517.6	600.8	7210	573.1	10315
42	250	44.50	1.22	.....	900	517.6	667.5	8010	617.5	11115
48	150	50.80	1.14	625	.....	554.9	659.2	7910	624.4	11240
48	250	50.80	1.33	625	.....	644.9	749.2	8990	714.4	12860
48	250	50.80	1.33	.....	1350	644.9	870.0	10440	795.0	14310

Class 150 and Class 250 Pipe are furnished with Class 125 Flanges drilled in accordance with American Standard B16.1 as shown on Page 6.

Class 250 Pipe can also be furnished with Class 250 Flanges drilled in accordance with American Standard B16.2 as shown on Page 6.

All sizes of flanged pipe can be furnished with greater wall thickness than shown.

Weights shown are subject to a minus tolerance of not more than 10% for individual pieces. To obtain the weight of any short length of pipe, figure the weight of the length from face to face of flanges and add the weight of two flanges.

After facing flanges, an inspection limit of plus or minus 1/16-inch shall be allowed on all contact surface dimensions of full-length or short-length flanged pipe in sizes up to and including 10 inches; and plus or minus ⅛-inch on sizes larger than 10 inches.

Minimum class thickness recommended for gray cast iron pipe to be threaded for pressure service is .38 in.

Minimum class thickness shown in table is the American Standard for centrifugally cast pipe with 5-ft. cover, condition B, except where such indicated thickness is less than .38 in. in which case .38 in. is shown.

For flanged fittings see American Standard A21.10, "Cast-Iron Fittings, 2 in. Through 48 in., for Water and Other Liquids."

Threaded pipe and threaded flanges are individually fitted, and the flanges are not interchangeable.

The gaskets and bolts to be used with the flanged pipe are to be selected by the purchaser with due consideration for the particular service and installation requirements.

Ductile Iron Flanged Pipe With Threaded Flanges

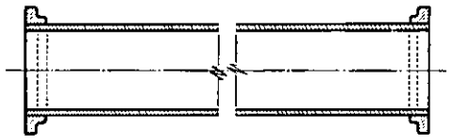

Size	Class or Maximum Working Pressure	Outside Diameter of Pipe In.	Minimum Class Thickness of Pipe In.	Weight Pounds			Weight—with Flanges—Pounds			
				One Flange Only		Per Foot Without Flanges	12-Foot Length		18-Foot Length	
				Class 125	Class 250		Per Ft.	Per Lgth.	Per Ft.	Per Lgth.
3	250	3.96	0.31	7	.....	10.9	12.1	145	11.7	210
3	250	3.96	0.31	.....	12	10.9	12.9	155	12.2	220
4	250	4.80	0.32	13	.....	13.8	15.8	190	15.3	275
4	250	4.80	0.32	.....	20	13.8	17.1	205	16.1	290
6	250	6.90	0.34	17	.....	21.4	24.2	290	23.3	420
6	250	6.90	0.34	.....	33	21.4	27.1	325	25.0	450
8	250	9.05	0.36	26	.....	30.1	34.6	415	33.1	595
8	250	9.05	0.36	.....	49	30.1	38.3	460	35.6	640
10	250	11.10	0.38	37	.....	39.2	45.4	545	43.3	780
10	250	11.10	0.38	.....	69	39.2	50.8	610	46.9	845
12	250	13.20	0.40	57	.....	49.2	58.8	705	55.6	1000
12	250	13.20	0.40	.....	100	49.2	65.8	790	60.3	1085
14	250	15.30	0.42	71	.....	60.1	72.1	865	68.1	1225
14	250	15.30	0.42	.....	128	60.1	81.3	975	74.4	1340
16	250	17.40	0.43	88	.....	70.1	84.6	1015	80.0	1440
16	250	17.40	0.43	.....	159	70.1	96.7	1160	87.8	1580
18	250	19.50	0.44	88	.....	80.6	95.4	1145	90.3	1625
18	250	19.50	0.44	.....	196	80.6	113.3	1360	102.5	1845
20	250	21.60	0.45	113	.....	91.5	110.4	1325	104.2	1875
20	250	21.60	0.45	.....	240	91.5	131.7	1580	118.1	2125
24	250	25.80	0.47	157	.....	114.4	140.4	1685	131.9	2375
24	250	25.80	0.47	.....	363	114.4	175.0	2100	154.7	2785
30	250	32.00	0.51	235	.....	154.4	193.8	2325	180.6	3250
30	250	32.00	0.51	.....	520	154.4	241.2	2895	212.2	3820
36	250	38.30	0.58	345	.....	210.3	267.9	3215	248.6	4475
36	250	38.30	0.58	.....	695	210.3	326.2	3915	287.5	5175
42	250	44.50	0.65	490	.....	274.0	355.8	4270	328.3	5910
42	250	44.50	0.65	.....	885	274.0	421.7	5060	372.2	6700
48	250	50.80	0.72	615	.....	346.6	449.2	5390	415.0	7470
48	250	50.80	0.72	.....	1325	346.6	567.5	6810	493.9	8890
54	250	57.10	0.81	760	.....	438.3	565.0	6780	522.8	9410

Class 250 Pipe is furnished with Class 125 Flanges drilled in accordance with American Standard B16.1 as shown on Page 6.

Class 250 Pipe can also be furnished with Class 250 Flanges drilled in accordance with American Standard B16.2 as shown on Page 6.

All sizes of flanged pipe can be furnished with greater wall thickness than shown.

Flanges for ductile iron pipe may be furnished either gray iron or ductile iron at the manufacturer's option unless otherwise specified on the invitation for bids.

Weights shown are subject to a minus tolerance of not more than 10% for individual pieces. To obtain the weight of any short length of pipe, figure the weight of the length from face to face of flanges and add the weight of two flanges.

After facing flanges, an inspection limit of plus or minus 1/16-inch shall be allowed on all contact surface to contact surface dimensions of full-length or short-length flanged pipe in sizes up to and including 10 inches; and plus or minus 1/8-inch on sizes larger than 10 inches.

The minimum class thickness for ductile iron flanged pipe to be threaded for pressure service is American Standard A21.51 Class 3.

For flanged fittings see American Standard A21.10, "Cast-Iron Fittings, 2 in. Through 48 in., for Water and Other Liquids."

Threaded pipe and threaded flanges are individually fitted, and the flanges are not interchangeable.

The gaskets and bolts to be used with the flanged pipe are to be selected by the purchaser with due consideration for the particular service and installation requirements.

SECTION 8

SPECIAL TYPES OF PIPE & FITTINGS

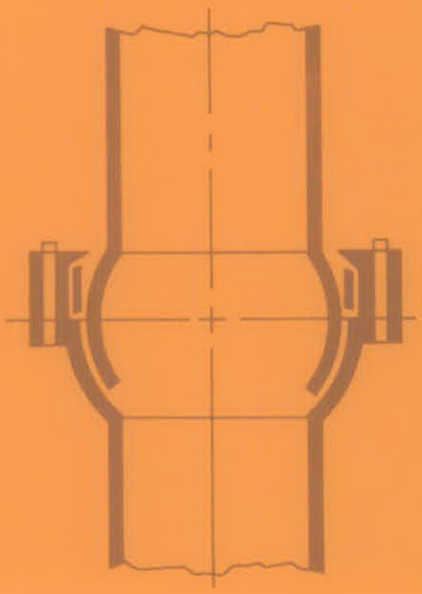

Push-On Joint with Integral Tapping Boss

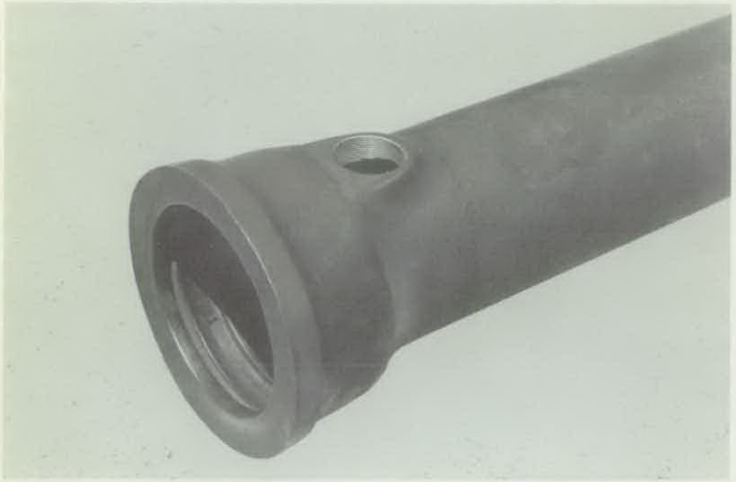

Branch Tapping Saddle

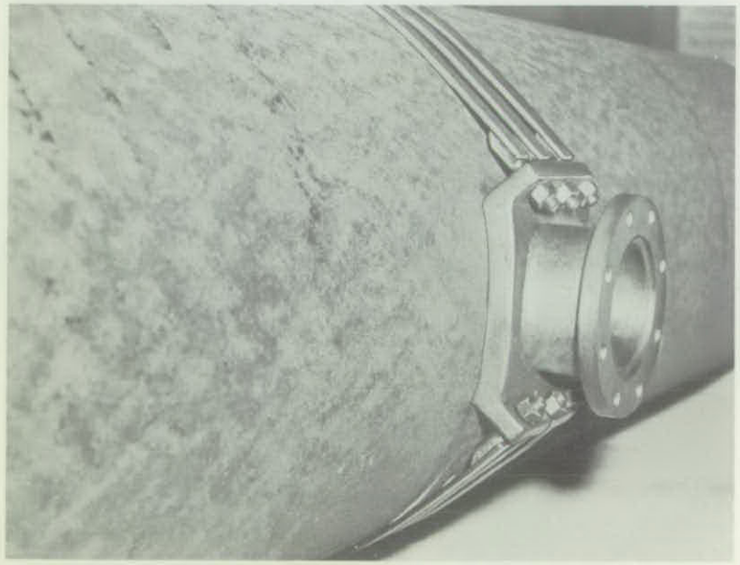

SPECIAL TYPES OF PIPE AND FITTINGS

PREFACE

The types of pipe and fittings in this Section are offered by individual manufacturers for special applications. The manufacturer should be consulted for information on design and capabilities of these products.

CONTENTS

CONTENTS	PAGE
Restrained Push-On Joints	2-3
Restrained Mechanical Joint	4
Mechanical Joint Ductile Iron Retainer Glands	4
Ball and Socket Joints	5
Boltless Flexible Joint Pipe	5
Bolted Flexible Joint Pipe	5
Mechanical Joint Anchoring Fittings-Tees	6
Mechanical Joint Anchoring Coupling	6
Mechanical Joint Anchoring Fittings-Elbows	6
Restrained Hydrant Tee	7
Restrained Push-On Joint Valve and Hydrant Tee	7
Push-On Joint with Integral Tapping Boss	8
Branch Tapping Saddle	8

RESTRAINED PUSH-ON JOINTS

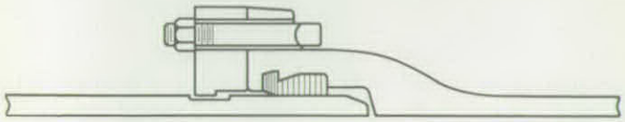

Fig. 1

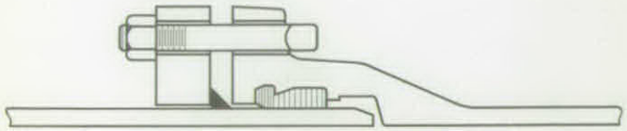

Fig. 2

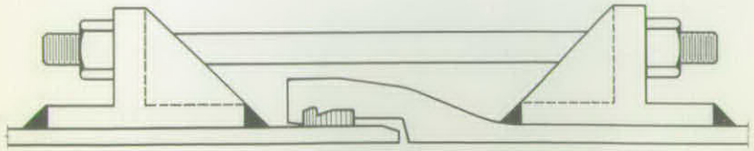

Fig. 3

Restrained Hydrant Tee

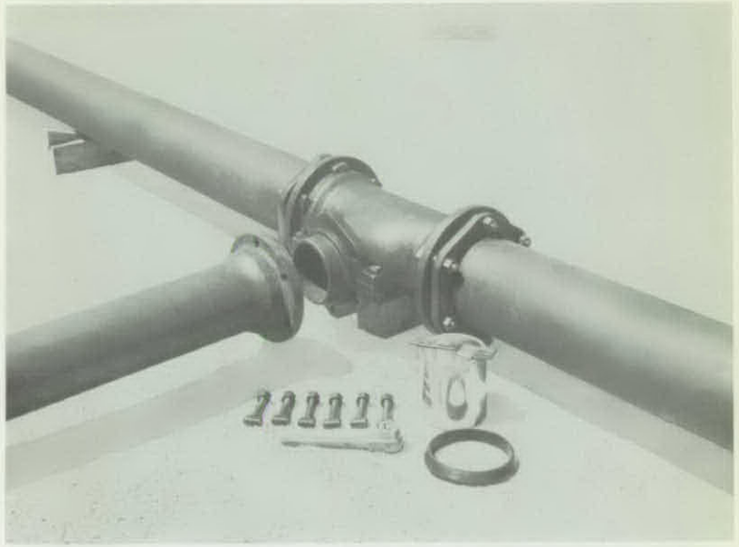

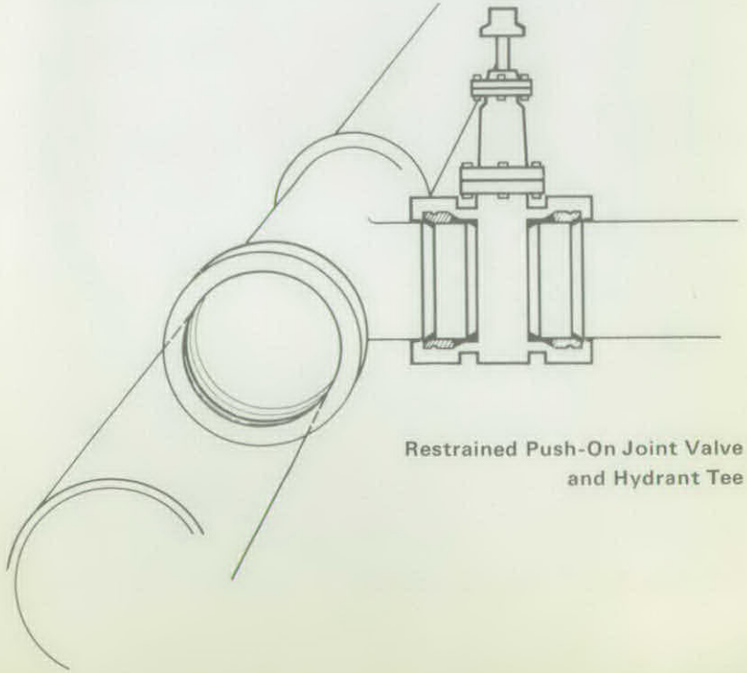

Restrained Push-On Joint Valve
and Hydrant Tee

Mechanical Joint Anchoring Fittings—Tees

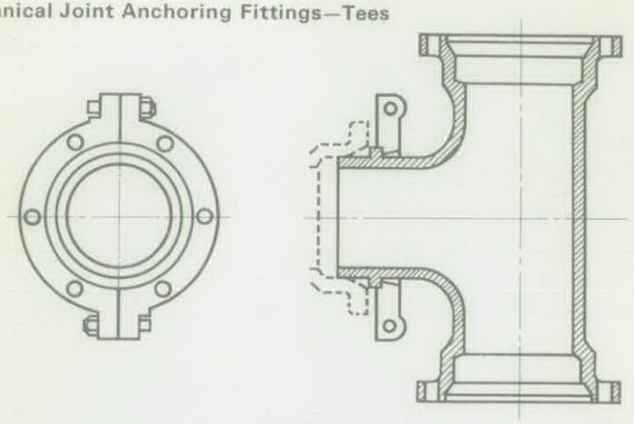

Mechanical Joint Anchoring Fittings—Elbows

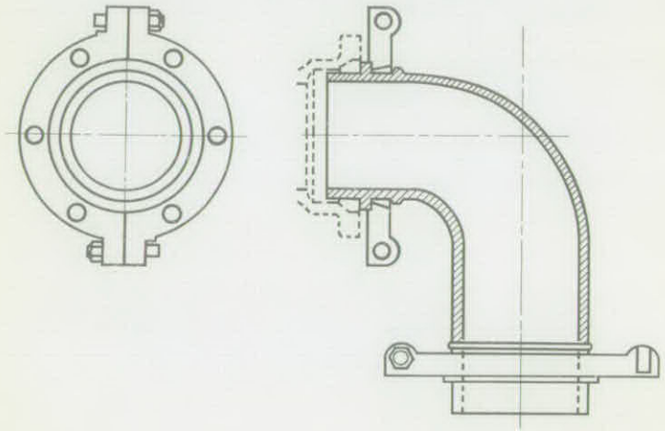

Mechanical Joint Anchoring Coupling

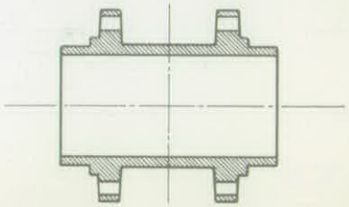

RESTRAINED PUSH-ON JOINTS

Fig. 4

2″ through 12″ diameters

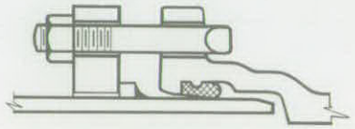

Fig. 5

14″ and larger diameters

Fig. 6

14″ and larger diameters

RESTRAINED MECHANICAL JOINT

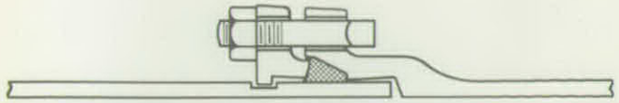

MECHANICAL JOINT DUCTILE IRON RETAINER GLANDS

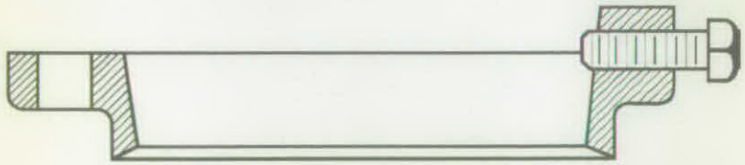

Typical retainer gland with set screws in bosses located on flange.

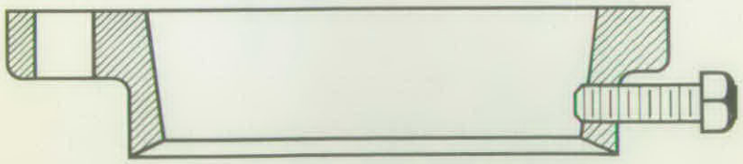

Typical retainer gland with set screws in lip.

BALL AND SOCKET JOINTS

Boltless Flexible Joint Pipe

Fig. 1

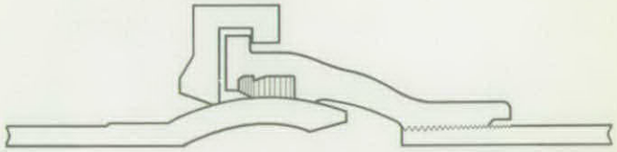

Fig. 2

Bolted Flexible Joint Pipe

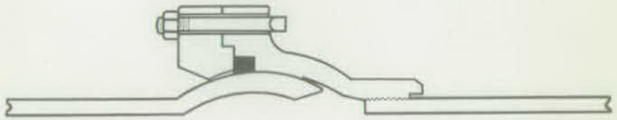

Fig. 1

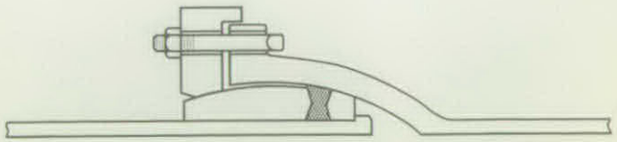

Fig. 2

SECTION 9

SALVAGING AND RE-USING CAST IRON PIPE

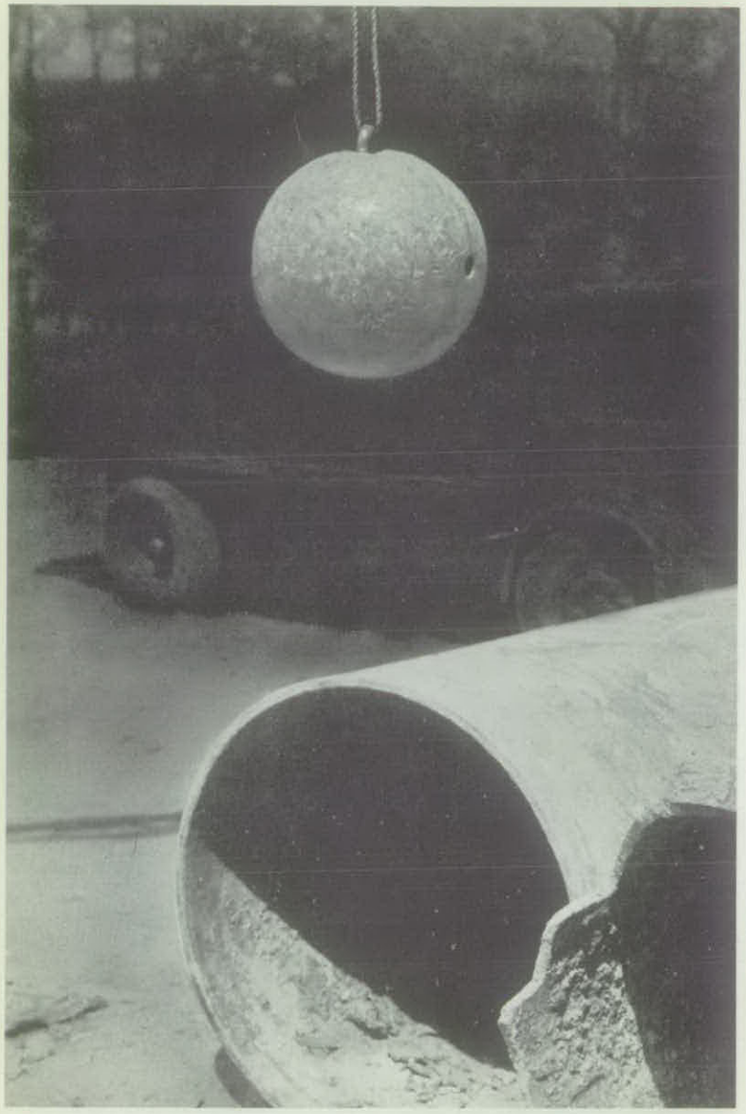

NEW YORK, N. Y.—In 1863 a 48-inch cast iron pipeline was installed from a reservoir in what is now Central Park to Fifth Avenue. After 75 years, the erection of the Metropolitan Museum of Art required a new cast iron pipe main to bypass the structure. Then in 1942 the line was removed to make room for bombproof storage vaults. Being lighter than the present New York City standard, pipe was sold as scrap, yielding valuable amounts of iron and lead, both critical, needed during that wartime period.

SALVAGING AND RE-USING CAST IRON PIPE

Cast Iron Pipe has a distinctive record of re-use—providing a second lifetime of service where increased demands of communities or new construction have dictated replacement by larger size pipe or relocation. In city after city, taxpayers have benefited from long-time performance of its cast iron water, sewer and gas lines, in not only their original locations, but in relocated service as well.

At the very end of a long, useful life, cast iron pipe returns still another dividend in scrap value. No other pipe can match this record.

CHEEKTOWAGA, NEW YORK—39-year-old pipe; good as new! That's the comment of officials inspecting this 16-inch cast iron pipe that was placed in service in 1925, which was removed in 1965 to make way for new construction. Other cast iron pipe installed in 1901 at same site was inspected at same time, and tap sample proved it to be in excellent condition.

ASHEVILLE, NORTH CAROLINA—Cast iron pipe dating back to 1916 and 1926 is stockpiled for re-use. 16-inch and 24-inch waterline pipe was replaced at a lower level to accommodate grading for a large supermarket. Both lines were in excellent condition and re-used without any maintenance being required.

CHARLESTON, SOUTH CAROLINA—Tidewater area conditions didn't phase this 16-inch gravity outfall line for cast iron pipeline installed in 1944. New Interstate highway interchange required new location of line which was completely submerged at high tide. Condition of this pipe was remarkably good after 17 years' exposure under these tough conditions.

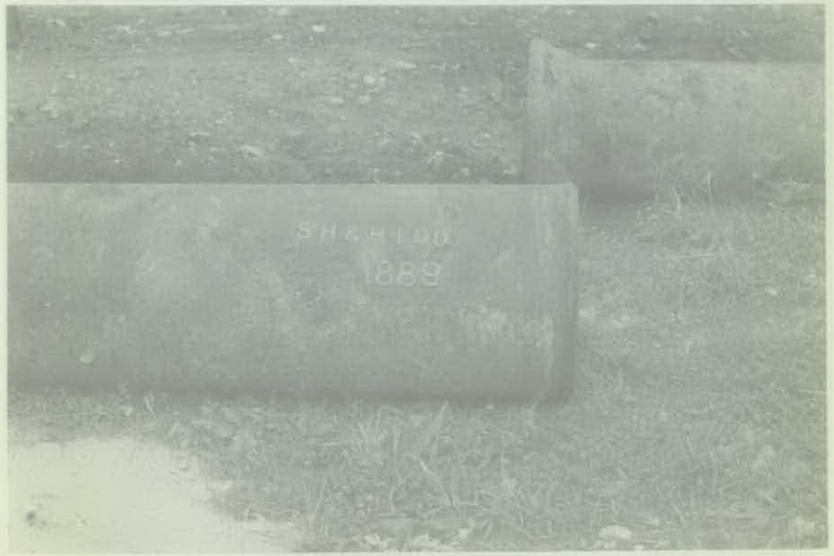

SPRINGFIELD, MISSOURI—The year: 1889, the place was Springfield, Missouri. This veteran pipe was recently salvaged and relocated. Other cast iron pipe produced in 1931 and installed in the system was also salvaged and relaid elsewhere at important savings to the taxpayers of the city.

FERGUS FALLS, MINNESOTA—New water plant uses 50-year-old pipe. That's the history of this cast iron pipe installed originally in 1916 and salvaged and re-used nearly 50 years later. Pipe report: "excellent condition."

BROWNWOOD, TEXAS—Installed 1886; still going strong. That's the performance record of this 10-inch bell and spigot cast iron pipe originally installed from pump house to downtown area of Brownwood. In 1904 a portion of the line was salvaged when a new dam was built and reinstalled in the Brownwood area. Again in 1960 large sections of the pipe were salvaged and stockpiled for still further re-use. Triple feature value.

COUNCIL GROVE, KANSAS—"Brand new" 25-year-old pipe! That's the praise given this 10-inch cast iron pipe which was reclaimed in connection with the relocation of the original waterline. Pipe as well as lining was found to be in excellent condition after this long service.

DAVIDSON, NORTH CAROLINA—Pipe moves over to make room for new lake! This 8-inch cast iron pipeline of 15,000 feet in length was installed in 1924. This cast iron pipe will go on to serve its community in another location.

TRAVERSE CITY, MICHIGAN—"Pipe was just as good after 65 years of service as when it was put into the ground." This is the report issued on this 8-inch cast iron pipe which was removed for replacement of larger diameter cast iron pipe. Future plans for this pipe: re-use wherever it can be installed in the system.

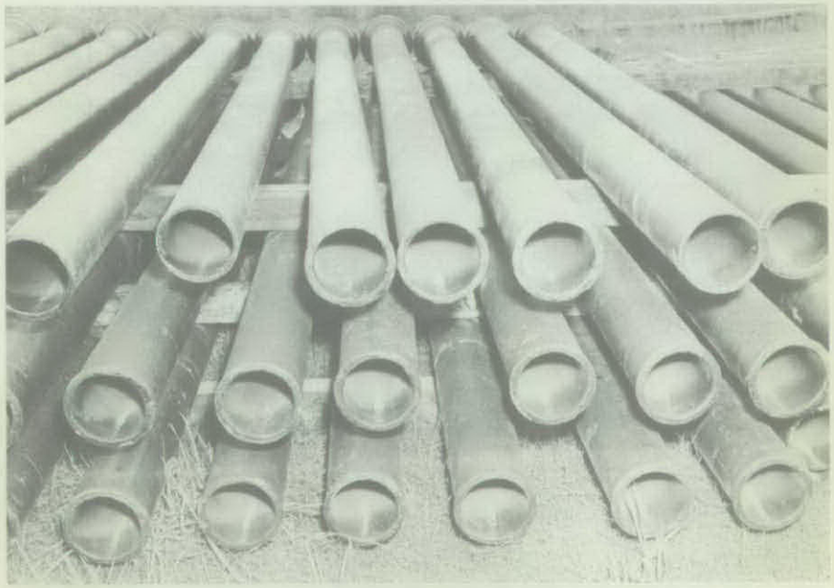

ELBERTON, GEORGIA—Old 6-inch cast iron pipe originally installed in 1906 and 1907 was taken up in 1961. After cleaning and lining, the pipe again went to work at another location for the city to provide dependable water distribution service.

SECTION 10

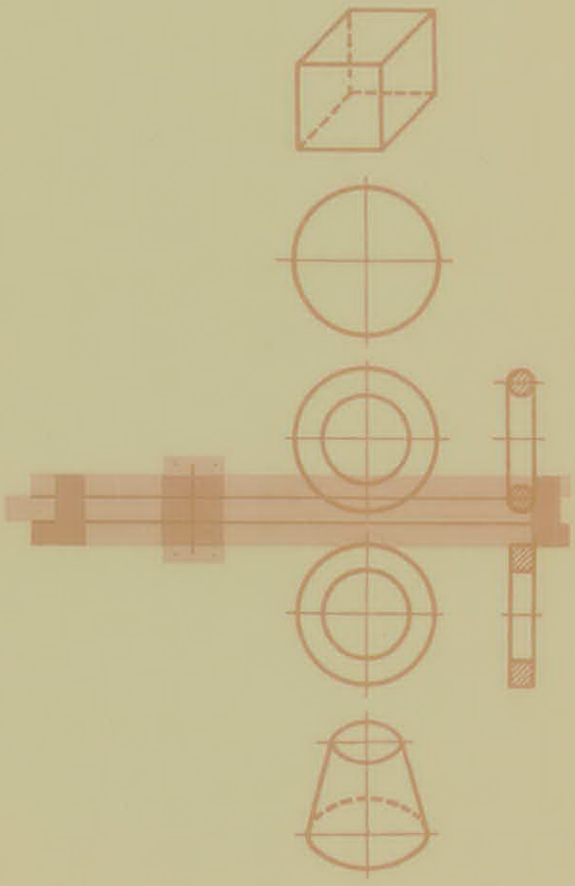

USEFUL TABLES

(Note: All tables and formulas contained in the following pages have been carefully checked and every precaution taken in proofreading, however, we do not assume responsibility for their accuracy.)

Pressures in Pounds per Square Inch, Corresponding to Heads of Water in Feet

Head Ft.	0	1	2	3	4	5	6	7	8	9
0	.....	0.433	0.866	1.299	1.732	2.165	2.598	3.031	3.464	3.987
10	4.330	4.763	5.196	5.629	6.062	6.495	6.928	7.361	7.794	8.277
20	8.660	9.093	9.526	9.959	10.392	10.825	11.258	11.691	12.124	12.557
30	12.990	13.423	13.856	14.289	14.722	15.155	15.588	16.021	16.454	16.887
40	17.320	17.753	18.186	18.619	19.052	19.485	19.918	20.351	20.784	21.217
50	21.650	22.083	22.516	22.949	23.382	23.815	24.248	24.681	25.114	25.547
60	25.980	26.413	26.846	27.279	27.712	28.145	28.578	29.011	29.444	29.877
70	30.310	30.743	31.176	31.609	32.042	32.475	32.908	33.341	33.774	34.207
80	34.640	35.073	35.506	35.939	36.372	36.805	37.238	37.671	38.104	38.537
90	38.970	39.403	39.836	40.269	40.702	41.135	41.568	42.001	42.436	42.867

Heads of Water in Feet, Corresponding to Pressures in Pounds per Square Inch

Pressure Lbs. per Sq. In.	0	1	2	3	4
0	.....	2.309	4.619	6.928	9.238
10	23.095	25.404	27.714	30.023	32.333
20	46.189	48.499	50.808	53.118	55.427
30	69.284	71.594	73.903	76.213	78.522
40	92.379	94.688	96.998	99.307	101.62
50	115.47	117.78	120.09	122.40	124.71
60	138.57	140.88	143.19	145.50	147.81
70	161.66	163.97	166.28	168.59	170.90
80	184.76	187.07	189.38	191.69	194.00
90	207.85	210.16	212.47	214.78	217.09
	5	6	7	8	9
0	11.547	13.857	16.166	18.476	20.785
10	34.642	36.952	39.261	41.570	43.880
20	57.737	60.046	62.356	64.665	66.975
30	80.831	83.141	85.450	87.760	90.069
40	103.93	106.24	108.55	110.85	113.16
50	127.02	129.33	131.64	133.95	136.26
60	150.12	152.42	154.73	157.04	159.35
70	173.21	175.52	177.83	180.14	182.45
80	196.31	198.61	200.92	203.23	205.54
90	219.40	221.71	224.02	226.33	228.64

At 62° F., 1 foot head = 0.433 lb. per square inch; 0.433 × 144 = 62.355 lb. per cubic foot. 1 lb. per square inch = 2.30947 feet head. 1 atmosphere = 14.7 lb. per square inch = 33.94 feet head.

Linear Expansion of Cast Iron Pipe

The coefficient of linear expansion of cast iron may be taken as 0.0000058 per degree Fahrenheit. The expansion or contraction in inches that will take place in a line of given length with various temperature changes is shown in the following table:

Temp. Difference °F	Length of Line in Feet			
	100	500	1000	5280
5	0.035	0.17	0.35	1.83
10	0.070	0.35	0.70	3.67
20	0.139	0.70	1.39	7.34
30	0.209	1.04	2.09	11.01
40	0.278	1.39	2.78	14.70
50	0.348	1.74	3.48	18.35
60	0.418	2.09	4.18	22.04
70	0.487	2.44	4.87	25.72
80	0.557	2.79	5.57	29.39
90	0.626	3.13	6.26	33.05
100	0.696	3.48	6.96	36.71
120	0.835	4.17	8.35	44.10
150	1.043	5.22	10.43	55.10

The coefficient of linear expansion of ductile iron may be taken as 0.0000062 per degree Fahrenheit. For figuring ductile iron expansion or contraction, results shown in above table may be increased by 7%.

Weight of Lead and Jute per Joint

Nominal Dia. of Pipe, Inches	3	4	6	8	10	12	14	16
Approx. Pounds of Lead Required per Joint	6.50	8.00	11.25	14.50	17.50	20.50	24.00	33.00
Approx. Pounds of Jute Required per Joint	0.18	0.21	0.31	0.44	0.53	0.61	0.81	0.94

Nominal Dia. of Pipe, Inches	18	20	24	30	36	42	48	54	60
Approx. Pounds of Lead Required per Joint	36.90	40.50	52.50	64.75	77.25	104.25	119.00	133.00	148.00
Approx. Pounds of Jute Required per Joint	1.00	1.25	1.50	2.06	3.00	3.50	4.00	5.60	6.20

The weight of lead per joint is based on the depth of lead required by A.W.W.A. laying specifications plus an allowance of .25" projection beyond the bell face for calking.

Conversion Factors

QUANTITIES AND UNITS OF MECHANICS

Multiply	By	To Obtain
MASS		
Ounces (avdp)	28.3495	Grams
Pounds (avdp)	0.45359237 (exactly)	Kilograms
Short tons (2000 lb)	907.185	Kilograms
	0.907185	Metric tons
FORCE/AREA		
Pounds per square inch	0.070307	Kilograms per square centimeter
Pounds per square foot	4.88243	Kilograms per square meter
MASS/VOLUME (DENSITY)		
Pounds per cubic foot	16.0185	Kilograms per cubic meter
	0.0160185	Grams per cubic centimeter
MASS/CAPACITY		
Pounds per gallon (U.S.)	119.829	Grams per liter
BENDING MOMENT OR TORQUE		
Inch-pounds	0.011521	Meter-kilograms
Foot-pounds	0.138255	Meter-kilograms
VELOCITY		
Feet per second	30.48 (exactly)	Centimeters per second
Miles per hour	1.609344 (exactly)	Kilometers per hour
FLOW		
Cubic feet per minute	0.4719	Liters per second
Gallons (U.S.) per minute	0.06309	Liters per second
WORK		
British thermal units (Btu)	1055.06	Joules
Btu per pound	2.326 (exactly)	Joules per gram
POWER		
Horsepower	745.700	Watts
Btu per hour	0.293071	Watts
Foot-pounds per second	1.35582	Watts
TEMPERATURE		
Temp. (°C) +17.78	1.8	Temp. (°F)
Temp. (°F) −32	5/9	Temp. (°C)

Conversion Factors

QUANTITIES AND UNITS OF SPACE

Multiply	By	To Obtain
LENGTH		
Inches	25.4 (exactly)	Millimeters
Feet	30.48 (exactly)	Centimeters
Yards	0.9144 (exactly)	Meters
Miles (statute)	1.609344 (exactly)	Kilometers
AREA		
Square inches	6.4516 (exactly)	Square centimeters
Square feet	0.092903 (exactly)	Square meters
Square yards	0.836127	Square meters
Square miles	2.58999	Square kilometers
VOLUME		
Cubic inches	16.3871	Cubic centimeters
Cubic feet	0.0283168	Cubic meters
Cubic yards	0.764555	Cubic meters
CAPACITY		
Gallons (U.S.)	3.78543	Cubic decimeters
	3.78533	Liters
Gallons (U.K.)	4.54609	Cubic decimeters
	4.54596	Liters
Cubic feet	28.3160	Liters

Equivalents of Fractions of an Inch

Fractions			Decimals	Milli-meters	Fractions			Decimals	Milli-meters
		1/64	0.015625	.3969			33/64	0.515625	13.0966
	1/32		0.03125	.7937		17/32		0.53125	13.4935
		3/64	0.046875	1.1906			35/64	0.546875	13.8904
1/16			0.0625	1.5875	9/16			0.5625	14.2872
		5/64	0.078125	1.9843			37/64	0.578125	14.6841
	3/32		0.09375	2.3812		19/32		0.59375	15.0810
		7/64	0.109375	2.7781			39/64	0.609375	15.4778
1/8			0.125	3.1749	5/8			0.625	15.8747
		9/64	0.140625	3.5718			41/64	0.640625	16.2716
	5/32		0.15625	3.9687		21/32		0.65625	16.6684
		11/64	0.171875	4.3655			43/64	0.671875	17.0653
3/16			0.1875	4.7624	11/16			0.6875	17.4622
		13/64	0.203125	5.1593			45/64	0.703125	17.8591
	7/32		0.21875	5.5561		23/32		0.71875	18.2559
		15/64	0.234375	5.9530			47/64	0.734375	18.6528
1/4			0.25	6.3499	3/4			0.75	19.0497
		17/64	0.265625	6.7468			49/64	0.765625	19.4465
	9/32		0.28125	7.1436		25/32		0.78125	19.8434
		19/64	0.296875	7.5405			51/64	0.796875	20.2403
5/16			0.3125	7.9374	13/16			0.8125	20.6371
		21/64	0.328125	8.3342			53/64	0.828125	21.0340
	11/32		0.34375	8.7311		27/32		0.84375	21.4309
		23/64	0.359375	9.1280			55/64	0.859375	21.8277
3/8			0.375	9.5248	7/8			0.875	22.2246
		25/64	0.390625	9.9217			57/64	0.890625	22.6215
	13/32		0.40625	10.3186		29/32		0.90625	23.0183
		27/64	0.421875	10.7154			59/64	0.921875	23.4152
7/16			0.4375	11.1123	15/16			0.9375	23.8121
		29/64	0.453125	11.5092			61/64	0.953125	24.2089
	15/32		0.46875	11.9060		31/32		0.96875	24.6058
		31/64	0.484375	12.3029			63/64	0.984375	25.0027
1/2			0.50	12.6998	1			1.00	25.3995

Millimeters and Equivalent Decimals and Nearest Fractions of Inches

One Millimeter = 0.03937″ One Inch = 25.40 Mill.

Millimeter	Inches Decimal	Inches Nearest Fraction	Millimeter	Inches Decimal	Inches Nearest Fraction
1	0.03937	3/64	51	2.00787	2 1/64
2	0.07874	5/64	52	2.04724	2 3/64
3	0.11811	1/8	53	2.08661	2 5/64
4	0.15748	5/32	54	2.12598	2 1/8
5	0.19685	13/64	55	2.16535	2 5/32
6	0.23622	15/64	56	2.20472	2 13/64
7	0.27559	9/32	57	2.24409	2 1/4
8	0.31496	5/16	58	2.28346	2 9/32
9	0.35433	23/64	59	2.32283	2 21/64
10	0.39370	25/64	60	2.36220	2 23/64
11	0.43307	7/16	61	2.40157	2 13/32
12	0.47244	15/32	62	2.44094	2 7/16
13	0.51181	1/2	63	2.48031	2 31/64
14	0.55118	35/64	64	2.51968	2 33/64
15	0.59055	19/32	65	2.55905	2 9/16
16	0.62992	5/8	66	2.59842	2 19/32
17	0.66929	43/64	67	2.63779	2 41/64
18	0.70886	45/64	68	2.67716	2 43/64
19	0.74803	3/4	69	2.71653	2 23/32
20	0.78740	25/32	70	2.75590	2 3/4
21	0.82677	53/64	71	2.79527	2 51/64
22	0.86614	55/64	72	2.83464	2 53/64
23	0.90051	29/32	73	2.87401	2 7/8
24	0.94488	15/16	74	2.91338	2 29/32
25	0.98425	63/64	75	2.95275	2 61/64
26	1.02362	1 1/64	76	2.99212	2 63/64
27	1.06299	1 1/16	77	3.03149	3 1/32
28	1.10236	1 7/64	78	3.07086	3 5/64
29	1.14173	1 19/64	79	3.11023	3 7/64
30	1.18110	1 3/16	80	3.14960	3 5/32
31	1.22047	1 7/32	81	3.18897	3 3/16
32	1.25984	1 1/4	82	3.22834	3 15/64
33	1.29921	1 19/64	83	3.26771	3 17/64
34	1.33858	1 11/32	84	3.30708	3 5/16
35	1.37795	1 3/8	85	3.34645	3 11/32
36	1.41732	1 27/64	86	3.38582	3 25/64
37	1.45669	1 29/64	87	3.42519	3 27/64
38	1.49606	1 1/2	88	3.46456	3 15/32
39	1.53543	1 17/32	89	3.50393	3 1/2
40	1.57480	1 37/64	90	3.54330	3 35/64
41	1.61417	1 39/64	91	3.58267	3 37/64
42	1.65354	1 21/32	92	3.62204	3 5/8
43	1.69291	1 11/16	93	3.66141	3 21/32
44	1.73228	1 47/64	94	3.70078	3 45/64
45	1.77165	1 49/64	95	3.74015	3 47/64
46	1.81102	1 13/16	96	3.77952	2 25/32
47	1.85039	1 27/32	97	3.81889	3 13/16
48	1.88976	1 57/64	98	3.85826	3 55/64
49	1.92913	1 59/64	99	3.89763	3 57/64
50	1.96850	1 31/32	100	3.93700	3 15/16

CONTENTS OF TANKS AND CISTERNS PER FOOT OF DEPTH

1 Gallon = 231 cubic inches = 1 cubic foot ÷ 7.4805 = 0.13368 cubic feet.

Diam. Ft. In.	Area Sq. Ft.	Gal. 1 Foot Depth	Diam. Ft. In.	Area Sq. Ft.	Gal. 1 Foot Depth	Diam. Ft. In.	Area Sq. Ft.	Gal. 1 Foot Depth
4— 0	12.57	94.00	10—3	82.52	617.26	20—3	322.06	2409.2
4— 1	13.10	97.96	10—6	86.59	647.74	20—6	330.06	2469.1
4— 2	13.64	102.00	10—9	90.76	678.95	20—9	338.16	2529.6
4— 3	14.19	106.12	11—0	95.03	710.90	21—0	346.36	2591.0
4— 4	14.75	110.32	11—3	99.40	743.58	21—3	354.66	2653.0
4— 5	15.32	114.61	11—6	103.87	776.99	21—6	363.05	2715.8
4— 6	15.90	118.97	11—9	108.43	811.14	21—9	371.54	2779.3
4— 7	16.50	123.42	12—0	113.10	846.03	22—0	380.13	2843.6
4— 8	17.10	127.95	12—3	117.86	881.65	22—3	388.82	2908.6
4— 9	17.72	132.56	12—6	122.72	918.00	22—6	397.61	2974.3
4—10	18.35	137.25	12—9	127.68	955.09	22—9	406.49	3040.8
4—11	18.99	142.02	13—0	132.73	992.91	23—0	415.48	3108.0
5— 0	19.63	146.88	13—3	137.89	1031.5	23—3	424.56	3175.9
5— 1	20.29	151.82	13—6	143.14	1070.8	23—6	433.74	3244.6
5— 2	20.97	156.83	13—9	148.49	1110.8	23—9	443.01	3314.0
5— 3	21.65	161.93	14—0	153.94	1151.5	24—0	452.39	3384.1
5— 4	22.34	167.12	14—3	159.48	1193.0	24—3	461.86	3455.0
5— 5	23.04	172.38	14—6	165.13	1235.3	24—6	471.44	3526.6
5— 6	23.76	177.72	14—9	170.87	1278.2	24—9	481.11	3598.9
5— 7	24.48	183.15	15—0	176.71	1321.9	25—0	490.87	3672.0
5— 8	25.22	188.66	15—3	182.65	1366.4	25—3	500.74	3745.8
5— 9	25.97	194.25	15—6	188.69	1411.5	25—6	510.71	3820.3
5—10	26.73	199.92	15—9	194.83	1457.4	25—9	520.77	3895.6
5—11	27.49	205.67	16—0	201.06	1504.1	26—0	530.93	3971.6
6— 0	28.27	211.51	16—3	207.39	1551.4	26—3	541.19	4048.4
6— 3	30.68	229.50	16—6	213.82	1599.5	26—6	551.55	4125.9
6— 6	33.18	248.23	16—9	220.35	1648.4	26—9	562.00	4204.1
6— 9	35.78	267.69	17—0	226.98	1697.9	27—0	572.56	4283.0
7— 0	38.48	287.88	17—3	233.71	1748.2	27—3	583.21	4362.7
7— 3	41.28	308.81	17—6	240.53	1799.3	27—6	593.96	4443.1
7 —6	44.18	330.48	17—9	247.45	1851.1	27—9	604.81	4524.3
7— 9	47.17	352.88	18—0	254.47	1903.6	28—0	615.75	4606.2
8— 0	50.27	376.01	18—3	261.59	1956.8	28—3	626.80	4688.8
8— 3	53.46	399.88	18—6	268.80	2010.8	28—6	637.94	4772.1
8— 6	56.75	424.48	18—9	276.12	2065.5	28—9	649.18	4856.2
8— 9	60.13	449.82	19—0	283.53	2120.9	29—0	660.52	4941.0
9— 0	63.62	475.89	19—3	291.04	2177.1	29—3	671.96	5026.6
9— 3	67.20	502.70	19—6	298.65	2234.0	29—6	683.49	5112.9
9— 6	70.88	530.24	19—9	306.35	2291.7	29—9	695.13	5199.9
9— 9	74.66	558.51	20—0	314.16	2350.1	30—0	706.86	5287.7
10— 0	78.54	587.52	....	.....	.....	....	.....	.....

CONTENTS OF PIPE

Capacities in Cubic Feet and in United States Gallons (231 Cubic Inches) per Foot of Length

Diameter, Inches	Diameter, Feet	For 1 Foot Length: Cubic Feet, Also Area in Sq. Ft.	For 1 Foot Length: U. S. Gal. (231 Cu. In.)	Diameter, Inches	Diameter, Feet	For 1 Foot Length: Cubic Feet, Also Area in Sq. Ft.	For 1 Foot Length: U. S. Gal. (231 Cu. In.)	Diameter, Inches	Diameter, Feet	For 1 Foot Length: Cubic Feet, Also Area in Sq. Ft.	For 1 Foot Length: U. S. Gal. (231 Cu. In.)
¼	.0208	.0003	.0026	6.75	.5625	.2485	1.859	19.0	1.583	1.969	14.73
5/16	.0260	.0005	.0040	7.00	.5833	.2673	1.999	19.5	1.625	2.074	15.52
⅜	.0313	.0008	.0057	7.25	.6042	.2868	2.144	20.0	1.666	2.182	16.32
7/16	.0365	.0010	.0078	7.50	.6250	.3068	2.295	20.5	1.708	2.292	17.15
½	.0417	.0014	.0102	7.75	.6458	.3275	2.450	21.0	1.750	2.405	17.99
9/16	.0469	.0017	.0129	8.00	.6667	.3490	2.611	21.5	1.792	2.521	18.86
⅝	.0521	.0021	.0159	8.25	.6875	.3713	2.777	22.0	1.833	2.640	19.75
11/16	.0573	.0026	.0193	8.50	.7083	.3940	2.948	22.5	1.875	2.761	20.65
¾	.0625	.0031	.0230	8.75	.7292	.4175	3.125	23.0	1.917	2.885	21.58
13/16	.0677	.0036	.0270	9.00	.7500	.4418	3.305	23.5	1.958	3.012	22.53
⅞	.0729	.0042	.0312	9.25	.7708	.4668	3.492	24.0	2.000	3.142	23.50
15/16	.0781	.0048	.0359	9.50	.7917	.4923	3.682	25.0	2.083	3.409	25.50
1.00	.0833	.0055	.0408	9.75	.8125	.5185	3.879	26.0	2.166	3.687	27.58
1.25	.1042	.0085	.0638	10.00	.8333	.5455	4.081	27.0	2.250	3.976	29.74
1.50	.1250	.0123	.0918	10.25	.8542	.5730	4.286	28.0	2.333	4.276	31.99
1.75	.1458	.0168	.1250	10.50	.8750	.6013	4.498	29.0	2.416	4.587	34.31
2.00	.1667	.0218	.1632	10.75	.8958	.6303	4.714	30.0	2.500	4.909	36.72
2.25	.1875	.0276	.2066	11.00	.9167	.6600	4.937	31.0	2.583	5.241	39.21
2.50	.2083	.0341	.2550	11.25	.9375	.6903	5.163	32.0	2.666	5.585	41.78
2.75	.2292	.0413	.3085	11.50	.9583	.7213	5.395	33.0	2.750	5.940	44.43
3.00	.2500	.0491	.3673	11.75	.9792	.7530	5.633	34.0	2.833	6.305	47.17
3.25	.2708	.0576	.4310	12.00	1.000	.7854	5.876	35.0	2.916	6.681	49.98
3.50	.2917	.0668	.4998	12.50	1.042	.8523	6.375	36.0	3.000	7.069	52.88
3.75	.3125	.0767	.5738	13.00	1.083	.9218	6.895	37.0	3.083	7.468	55.86
4.00	.3333	.0873	.6528	13.50	1.125	.9940	7.435	38.0	3.166	7.876	58.92
4.25	.3542	.0985	.7370	14.00	1.167	1.069	7.997	39.0	3.250	8.296	62.06
4.50	.3750	.1105	.8263	14.50	1.208	1.147	8.578	40.0	3.333	8.728	65.29
4.75	.3958	.1231	.9205	15.00	1.250	1.227	9.180	41.0	3.416	9.168	68.58
5.00	.4167	.1364	1.020	15.50	1.292	1.310	9.801	42.0	3.500	9.620	71.96
5.25	.4375	.1503	1.124	16.00	1.333	1.396	10.44	43.0	3.583	10.084	75.43
5.50	.4583	.1650	1.234	16.50	1.375	1.485	11.11	44.0	3.666	10.560	79.00
5.75	.4792	.1803	1.349	17.00	1.417	1.576	11.79	45.0	3.750	11.044	82.62
6.00	.5000	.1963	1.469	17.50	1.458	1.670	12.50	46.0	3.833	11.540	86.32
6.25	.5208	.2130	1.594	18.00	1.500	1.767	13.22	47.0	3.916	12.048	90.12
6.50	.5417	.2305	1.724	18.50	1.542	1.867	13.97	48.0	4.000	12.566	94.02

1 Cubic foot of water weighs 62.35 pounds; 1 gallon (U. S.) weighs 8.335 pounds.

Equivalents of Measure

LENGTHS

1 meter, m = 10 decimeters, dm = 100 centimeters, cm = 1000 millimeters, mm.
1 meter, m = 0.1 decameter, dkm = 0.01 hectometer, hm = 0.001 kilometer, km.
1 meter, m = 39.37 inches, U. S. Standard = 39.370113 inches, British Standard.
1 millimeter, mm = 1000 microns, μ = 0.03937 inch = 39.37 mils.

Meters m	Inches In.	Feet Ft.	Yard Yd.	Rods r.	Chains Ch.	Miles, U. S.: Statute	Miles, U. S.: Nautical	Kilometers Km.
1	39.37	3.28083	1.09361	0.19884	0.04971	0.0006214	0.0005396	0.001
0.02540	1	0.08333	0.02778	0.005051	0.001263	0.00001578	0.0000137	0.00002540
0.30480	12	1	0.33333	0.06061	0.01515	0.0001894	0.0001645	0.0003048
0.91440	36	3	1	0.18182	0.04545	0.0005682	0.0004934	0.0009144
5.02921	198	16.5	5.5	1	0.25	0.003125	0.002714	0.005029
20.1168	792	66	22	4	1	0.01250	0.01085	0.02012
1609.35	63360	5280	1760	320	80	1	0.86839	1.60935
1853.25	72962.5	6080.20	2026.73	368.497	92.1243	1.15155	1	1.85325
1000	39370	3280.83	1093.61	198.838	49.7096	0.62137	0.53959	1

1 yard, U. S. = 1.0000029 yards British. 1 yard British = 0.9999971 yard U. S.
1 chain, Gunter's = 100 links. 1 link = 7.92 inches.
1 cable length, U. S. = 120 fathoms = 960 spans = 720 feet = 219.457 meters.
1 league, U. S. = 3 statute miles = 24 furlongs.
1 international geographical mile = 1/15° at equator = 7422 m = 4.611808 U. S. statute miles.
1 international nautical mile = 1/60° at meridian = 1852 m = 0.999326 U. S. nautical miles.
1 U. S. nautical mile = 1/60° of circumference of sphere whose surface equals that of the earth = 6080.27 feet = 1.15155 statute miles = 1853.27 meters.
1 British nautical mile = 6080.00 feet = 1.15152 statute miles = 1853.19 meters.

Printed through the courtesy of the Carnegie Steel Company.

Equivalents of Measure

SURFACES AND AREAS

1 sq. meter, m^2 = 100 sq. decimeters, dm^2 = 10000 sq. centimeters, cm^2.
1 sq. meter, m^2 = 0.01 are, a = 0.0001 hectare, ha.
1 sq. millimeter, mm^2 = 0.01 cm^2 = 0.00155 sq. inch = 1973.5 circular mils.
1 acre, a = 1 sq. decameter, dkm = 0.0247104 acre.

Sq. Meters m^2	Sq. Inches Sq. In.	Sq. Feet Sq. Ft.	Sq. Yards Sq. Yd.	Sq. Rods Sq. r.	Acres A	Hectares Ha.	Sq. Miles Statute	Sq. Kilometers Km^2
1	1550.00	10.7639	1.19599	0.03954	0.0002471	0.0001	0.0000003861	0.000001
0.0006452	1	0.006944	0.0007716	0.00002551	0.0000001594	0.00000006452	0.0000000002491	0.0000000006452
0.09290	144	1	0.11111	0.003673	0.00002296	0.000009290	0.00000003587	0.00000009290
0.83613	1296	9	1	0.03306	0.0002066	0.00008361	0.0000003228	0.0000008361
25.2930	39204	272.25	30.25	1	0.00625	0.002529	0.000009766	0.00002529
4046.87	6272640	43560	4840	160	1	0.40469	0.001563	0.004047
10000	15499969	107639	11959.9	395.366	2.47104	1	0.003861	0.01
2589999	.....	27878400	3097600	102400	640	259.000	1	2.59000
1000000	.....	10763867	1195985	39536.6	247.104	100	0.38610	1

1 sq. rod, sq. pole, or sq. perch = 625 sq. links = 1/160 acre.
1 sq. chain, Gunter's = 16 sq. rods = 1/10 acre.
1 acre = 4 sq. rods = 160 sq. rods. Square of 1 acre = 208.7103 feet square.

Printed through the courtesy of the Carnegie Steel Company.

It is frequently desired to know what number of pipe of a given size is equal in carrying capacity to one pipe of a larger size. At the same velocity of flow the volume delivered by two pipe of different sizes is proportional to the squares of their diameters; thus one 4-inch pipe will deliver the same volume as four 2-inch pipe. With the same head, however, the velocity is less in the smaller pipe, and the volume delivered varies about as the square root of the fifth power. This table is calculated on this basis. The figures opposite the intersection of any two sizes is the number of the smaller-sized pipe required to equal one of the larger; thus one 4-inch equals 5.7 two-inch.

Equation of Pipe

Diam. Inches	½	¾	1	2	3	4	5	6	8	10	12	14	16	18	20	24	30	36	42	48
2	32.0	11.7	5.7	1.0																
3	88.2	32.0	15.6	2.8	1.0															
4	181	65.7	32.0	5.7	2.1	1.0														
5	316	115	55.9	9.9	3.6	1.7	1.0													
6	499	181	88.2	15.6	5.7	2.8	1.6	1.0												
8		372	181	32.0	11.7	5.7	3.2	2.1	1.0											
10		649	316	55.9	20.3	9.9	5.7	3.6	1.7	1.0										
12			499	88.2	32.0	15.6	8.9	5.7	2.8	1.6	1.0									
14			733	130	47.1	22.9	13.1	8.3	4.1	2.3	1.5	1.0								
16				181	65.7	32.0	18.3	11.7	5.7	3.2	2.1	1.4	1.0							
18				243	88.2	43.0	24.6	15.6	7.6	4.3	2.8	1.9	1.3	1.0						
20				316	115	55.9	32.0	20.3	9.9	5.7	3.6	2.4	1.7	1.3	1.0					
24				499	181	88.2	50.5	32.0	15.6	8.9	5.7	3.8	2.8	2.1	1.6	1.0				
30									27.2	15.6	10.0	6.7	4.8	3.6	2.8	1.7	1.0			
36										24.6	15.6	10.6	7.6	5.7	4.3	2.8	1.6	1.0		
42										36.2	22.9	15.6	11.2	8.3	6.4	4.1	2.3	1.5	1.0	
48										50.5	32.0	21.8	15.6	11.7	8.9	5.7	3.2	2.1	1.4	1.0

ANNUITY TABLE

Capitalization of Annuity of $1,000 for From 5 to 100 years

Years	2½%	3%	3½%	4%	4½%	5%	5½%	6%
5	4,645.88	4,579.60	4,514.92	4,451.68	4,389.91	4,329.45	4,268.09	4,212.40
10	8,752.17	8,530.13	8,316.45	8,110.74	7,912.67	7,721.73	7,537.54	7,360.19
15	12,381.41	11,937.80	11,517.23	11,118.06	10,739.42	10,379.53	10,037.48	9,712.30
20	15,589.215	14,877.27	14,212.12	13,590.21	13,007.88	12,462.13	11,950.26	11,469.96
25	18,424.67	17,413.01	16,481.28	15,621.93	14,828.12	14,093.86	13,413.82	12,783.38
30	20,930.59	19,600.21	18,391.85	17,291.86	16,288.77	15,372.36	14,533.63	13,764.85
35	23,145.31	21,487.04	20,000.43	18,664.37	17,460.89	16,374.36	15,390.48	14,488.65
40	25,103.53	23,114.36	21,354.83	19,792.65	18,401.49	17,159.01	16,044.92	15,046.31
45	26,833.15	24,518.49	22,495.23	20,719.89	19,156.24	17,773.99	16,547.65	15,455.85
50	28,362.48	25,729.58	23,455.21	21,482.08	19,761.93	18,255.86	16,931.97	15,761.87
70	32,897.85	29,123.36	26,000.65	23,394.57	21,202.16	19,342.74	17,752.90	16,384.51
100	36,614.21	31,598.81	27,655.36	24,504.96	21,949.21	19,847.90	18,095.83	16,612.64

Equivalents of Measure

MASSES AND WEIGHTS

1 gram, g = 10 decigrams, dg = 100 centigrams, cg = 1000 milligrams, mg.
1 gram, g = 0.1 decagram, dkg = 0.01 hectogram, hg = 0.001 kilogram, kg.
1 kilogram, kg = 1 cu. decimeter of water or liter, 4°C, 45° Lat. and sea level = 15432.35639 grains, U. S. and British Standard.

Kilograms Kg.	Grains Gr.	Ounces		Pounds		Tons		
		Troy Oz. T.	Avoirdupois Oz. Av.	Troy Lb. T.	Avoirdupois Lb. Av.	Net, Short 2000 Lbs.	Gross, Long 2240 Lbs.	Metric 1000 Kg.
1	15432.4	32.1507	35.2740	2.67923	2.20462	0.001102	0.0009842	0.001
0.00006480	1	0.002083	0.002286	0.0001736	0.0001429	0.00000007143	0.00000006378	0.00000006480
0.03110	480	1	1.09714	0.08333	0.06857	0.00003429	0.00003061	0.00003110
0.02835	437.5	0.91146	1	0.07595	0.06250	0.00003125	0.00002790	0.00002835
0.37324	5760	12	13.1657	1	0.82286	0.0004114	0.0003674	0.0003732
0.45359	7000	14.5833	16	1.21528	1	0.00050	0.0004464	0.0004536
907.185	14000000	29166.7	32000	2430.56	2000	1	0.89286	0.90719
1016.05	15680000	3266.7	35840	2722.22	2240	1.12	1	1.01605
1000	15432356	32150.7	35274.0	2679.23	2204.62	1.10231	0.98421	1

1 ounce avoir. = 16 drams, avoir. 1 ounce troy = 20 pennyweight, dwt.
1 ounce apoth., ℥ = 8 drams, ʒ = 24 scruples, ℈ = 480 grains, gr = 31.1035 gr.
1 hundredweight = 1/20 long ton = 4 quarters = 8 stone = 112 lbs. = 50.8024 kg.

Printed through the courtesy of the Carnegie Steel Company.

ANNUITY TABLE

Giving Yearly Payments Required to Redeem $100 at End of Any Year, From 1 to 100

Years	2½%	3%	3½%	4%	4½%	5%	6%
1	100.00	100.00	100.00	100.00	100.00	100.00	100.00
2	49.38	49.26	49.14	49.02	48.90	48.78	48.54
3	32.51	32.36	32.19	32.03	31.88	31.72	31.41
4	24.08	23.90	23.73	23.55	23.37	23.20	22.86
5	19.02	18.84	18.65	18.46	18.28	18.10	17.74
6	15.65	15.46	15.27	15.08	14.89	14.70	14.34
7	13.25	13.05	12.85	12.66	12.47	12.28	11.91
8	11.45	11.25	11.05	10.85	10.66	10.47	10.10
9	10.05	9.84	9.64	9.45	9.26	9.07	8.70
10	8.93	8.72	8.52	8.33	8.14	7.95	7.59
11	8.01	7.81	7.61	7.42	7.23	7.04	6.68
12	7.25	7.05	6.85	6.66	6.47	6.28	5.93
13	6.60	6.40	6.21	6.01	5.83	5.65	5.30
14	6.05	5.85	5.66	5.47	5.28	5.10	4.76
15	5.58	5.38	5.18	4.99	4.81	4.63	4.30
16	5.16	4.96	4.77	4.58	4.40	4.23	3.90
17	4.79	4.60	4.40	4.22	4.04	3.87	3.54
18	4.47	4.27	4.08	3.90	3.72	3.55	3.24
19	4.18	3.98	3.79	3.61	3.44	3.27	2.96
20	3.91	3.72	3.54	3.36	3.19	3.02	2.72
21	3.68	3.49	3.30	3.13	2.96	2.80	2.50
22	3.46	3.27	3.09	2.92	2.75	2.60	2.30
23	3.27	3.08	2.90	2.73	2.57	2.41	2.13
24	3.09	2.90	2.73	2.56	2.40	2.25	1.97
25	2.93	2.74	2.57	2.40	2.24	2.10	1.82
26	2.78	2.59	2.42	2.26	2.10	1.96	1.69
27	2.64	2.46	2.29	2.12	1.97	1.83	1.57
28	2.51	2.33	2.16	2.00	1.85	1.71	1.46
29	2.39	2.21	2.04	1.89	1.74	1.60	1.36
30	2.28	2.10	1.94	1.78	1.64	1.51	1.26
31	2.17	2.00	1.84	1.69	1.54	1.41	1.18
32	2.08	1.90	1.74	1.60	1.46	1.33	1.10
33	1.99	1.82	1.66	1.51	1.37	1.25	1.03
34	1.90	1.73	1.58	1.43	1.30	1.18	.96
35	1.82	1.65	1.50	1.36	1.23	1.11	.90
36	1.75	1.58	1.43	1.29	1.16	1.04	.84
37	1.67	1.51	1.36	1.22	1.10	.98	.79
38	1.61	1.45	1.30	1.16	1.04	.93	.74
39	1.54	1.38	1.24	1.11	.99	.88	.69
40	1.48	1.33	1.18	1.05	.93	.83	.65
41	1.43	1.27	1.13	1.00	.89	.78	.61
42	1.37	1.22	1.08	.95	.84	.74	.57
43	1.32	1.17	1.03	.91	.80	.70	.53
44	1.27	1.12	.99	.87	.76	.66	.50
45	1.23	1.08	.95	.83	.72	.63	.47
46	1.18	1.04	.91	.79	.68	.59	.44
47	1.14	1.00	.87	.75	.65	.56	.41
48	1.10	.96	.83	.72	.62	.53	.39
49	1.06	.92	.80	.69	.59	.50	.37
50	1.03	.89	.76	.66	.56	.48	.34

ANNUITY TABLE

Giving Yearly Payments Required to Redeem $100 at End of Any Year, From 1 to 100 (continued)

Years	2½%	3%	3½%	4%	4½%	5%	6%
51	.99	.85	.73	.63	.53	.45	.32
52	.96	.82	.70	.60	.51	.43	.30
53	.93	.79	.67	.57	.48	.41	.29
54	.89	.76	.65	.55	.46	.39	.27
55	.87	.73	.62	.52	.44	.37	.25
56	.84	.71	.60	.50	.42	.35	.24
57	.81	.68	.57	.48	.40	.33	.22
58	.78	.66	.55	.46	.38	.31	.21
59	.76	.64	.53	.44	.36	.30	.20
60	.74	.61	.51	.42	.35	.28	.19
61	.71	.59	.49	.40	.33	.27	.18
62	.69	.57	.47	.39	.31	.26	.17
63	.67	.55	.45	.37	.30	.24	.16
64	.65	.53	.44	.35	.29	.23	.15
65	.63	.51	.42	.34	.27	.22	.14
66	.61	.50	.40	.32	.26	.21	.13
67	.59	.48	.39	.31	.25	.20	.12
68	.57	.46	.37	.30	.24	.19	.12
69	.56	.45	.36	.29	.23	.18	.11
70	.54	.43	.35	.27	.22	.17	.10
71	.52	.42	.33	.26	.21	.16	.10
72	.51	.41	.32	.25	.20	.15	.09
73	.49	.39	.31	.24	.19	.15	.09
74	.48	.38	.30	.23	.18	.14	.08
75	.47	.37	.29	.22	.17	.13	.08
76	.45	.35	.28	.21	.16	.13	.07
77	.44	.34	.27	.21	.16	.12	.07
78	.43	.33	.26	.20	.15	.11	.06
79	.41	.32	.25	.19	.14	.11	.06
80	.40	.31	.24	.18	.14	.10	.06
81	.39	.30	.23	.17	.13	.10	.05
82	.38	.29	.22	.17	.13	.09	.05
83	.37	.28	.21	.16	.12	.09	.05
84	.36	.27	.21	.15	.11	.08	.05
85	.35	.26	.20	.15	.11	.08	.04
86	.34	.26	.19	.14	.10	.08	.04
87	.33	.25	.18	.14	.10	.07	.04
88	.32	.24	.18	.13	.10	.07	.04
89	.31	.23	.17	.13	.09	.07	.03
90	.30	.23	.17	.12	.09	.06	.03
91	.30	.22	.16	.12	.08	.06	.03
92	.29	.21	.15	.11	.08	.06	.03
93	.28	.21	.15	.11	.08	.05	.03
94	.27	.20	.14	.10	.07	.05	.03
95	.26	.19	.14	.10	.07	.05	.02
96	.26	.19	.13	.09	.07	.05	.02
97	.25	.18	.13	.09	.06	.04	.02
98	.24	.18	.12	.09	.06	.04	.02
99	.24	.17	.12	.08	.06	.04	.02
100	.23	.16	.12	.08	.06	.04	.02

INDEX

	SECTION	PAGE
ACCEPTANCE TESTS	1	7
See also applicable ASA Standard (now USA Standard)	6	
ANNUITY TABLES	10	8-10
BACKFILLING	3	12
BALL AND SOCKET JOINTS:		
Details of Joints	8	5
in Sewerage Systems	5	3
in Subaqueous Pipelines	5	7
BASE BENDS AND TEES— see Standard A21.10	6	
BEDDING PIPE	3	3, 5
BELL HOLES	3	3
BELL AND SPIGOT JOINT:		
History	1	2
Jointing	3	6
	10	2
Standard for Pipe, A21.6, A21.8	6	
Standard for Fittings, A21.10	6	
BENDS—see Standard A21.10	6	
BOLTS, Mechanical Joint— see Standard A21.11	6	
BREAKS IN CAST IRON PIPE	3	4
CALKING PIPE—see Jointing		
CAPS—see Standard A21.10	6	
CARRYING CAPACITY—see Flow Capacity		
CASTING—see Manufacturing		
CAST IRON PIPE—see Ductile Iron Pipe or Gray Cast Iron Pipe		
CEMENT LINING:		
Economics of	2	5
in Fittings, see Standard A21.10	6	

	SECTION	PAGE
CEMENT LINING:—Continued		
History of	2	4
in Pipe, see Standards A21.6, A21.8, A21.12, A21.51	6	
Process for	2	5
Standard for – A21.4	6	
in Water Transmission and Distribution	5	1
CLASS THICKNESS—see Pipe Classes		
COATINGS—see Standards A21.6, A21.8, A21.10, A21.12, A21.51, A21.52	6	
CONNECTING PIECES—see Standard A21.10	6	
CONVERSION FACTORS:		
Pressure vs. Feet of Water Head	10	1
Quantities and Units of Space	10	14
Quantities and Units of Mechanics	10	15
See also Equivalents		
CONTENTS OF:		
Pipe	10	12
Tanks and Cisterns	10	13
CORROSION:		
Allowances—see Design of Pipe		
External	4	2
Internal	4	1
Protection against	4	3
Soil Surveys	4	4
Resistance to:		
Metallurgy	1	5
	4	4
in Industrial Piping	5	5
in Sewerage Systems	5	3
in Water and Waste Water Plants	5	3
CROSSES—see Standard A21.10	6	
CUTTING PIPE	3	12
DEFLECTION OF JOINTS—see Joint Deflections		
DELIVERY OF PIPE	3	2

	SECTION	PAGE
SPECIAL JOINTS, PIPE AND FITTINGS	1	3
	8	
STACKING PIPE	3	2
STANDARDS, ASA (now designated USA Standards)	6	
SUBAQUEOUS PIPELINES:		
Installation of	3	9
Joints for	5	6
see also Ball and Socket Joints		
SUBMARINE JOINTS—see Ball and Socket Joints		
TAPPED TEES—see Standard A21.10	6	
TAPPING BOSS	8	8
TAPPING SADDLE	8	8
TEES:		
Hydrant (Restrained)	8	6
Standard, see Standard A21.10	6	
Tapped, see Standard A21.10	6	
TEST SITES, CIPRA	4	2
TESTING WATER MAINS	3	10
THRUST BLOCKING	3	12
TRANSMISSION LINES, WATER, Use of Cast Iron Pipe in	5	1
TRENCH IMPROVEMENT	4	3
TRENCHING	3	3
TRENCH WIDTH, suggested minimums	3	3
TUBERCULATION—see Corrosion, Internal; also Flow Capacity		
UNLOADING PIPE	3	2
WALL CASTINGS	3	4
WATER HAMMER ALLOWANCES—see Design of Pipe		
WILLIAMS-HAZEN FORMULA	2	8

	SECTION	PAGE
PIPE CLASSES, Selection of	3	1
See also Standards A21.1, A21.6, A21.8, A21.50, A21.51, A21.52	6	
PIPING SYSTEMS	5	1
PLANTS, TREATMENT, WATER AND WASTE WATER, use of Cast Iron Pipe in	5	2
PLUGS—see Standard A21.10	6	
POLYETHYLENE TUBE, LOOSE	4	3
PRESSURE TESTING	3	10
PUSH-ON JOINT:		
Deflection	3	7-8
History	1	3
Leakage, allowable	3	10-11
Pipe, see A21.6, A21.8	6	
Restrained	8	2, 7
Standard for - A21.11	6	
in Subaqueous Pipelines	5	6
with Tapping Boss	8	8
in Water Transmission and Distribution	5	1
QUALITY CONTROL	1	6
REDUCERS—see Standard A21.10	6	
RESTRAINED JOINTS	8	4
RETAINER GLANDS	8	4
RE-USING CAST IRON PIPE	9	1
ROLL-ON JOINT	1	2
RUBBER GASKET JOINTS:		
See Mechanical Joint, Push-On Joint		
SALVAGING CAST IRON PIPE	9	1
SERVICE RECORDS	1	1
SEWERAGE SYSTEMS, Use of Cast Iron Pipe in	5	3
SLEEVES—see Standard A21.10	6	
SOIL SURVEYS	4	4

	SECTION	PAGE
DESIGN OF PIPE:		
Corrosion Allowance	4	4
Gravity Sewer Mains	5	3
Method for	3	1
See also A21.1, A21.50	6	
DISTRIBUTION SYSTEMS, WATER, Use of Cast Iron Pipe in	5	1
DUCTILE IRON FITTINGS—see Standard A21.10	6	
DUCTILE IRON PIPE:		
Design of	3	1
See also Standard A21.50	6	
Flanged Pipe	7	4
for Gas, Standard A21.52	6	
for Water, Standard A21.51	6	
Installation of	3	1
Manufacture of	1	3
Metallurgy of	1	6
EQUIVALENTS:		
Decimals vs. Fractions of an Inch	10	3
Millimeters vs. Inches	10	4
of Measure	10	5-7
EXCAVATION	3	3
EXPANSION OF CAST IRON PIPE	10	2
FITTINGS:		
Anchoring Type	8	6
Hydrant Tees	8	6, 7
Manufacture of	1	7
Support of (Thrust Blocking)	3	12
Standard A21.10	6	
Use around Obstructions	3	4
FLANGE DETAILS, Class 125 and Class 250	7	6
FLANGED FITTINGS		
See Standard A21.10	6	
FLANGED PIPE:		
CIPRA Standard	7	1
in Water and Waste Water Treatment Plants	5	2

	SECTION	PAGE
FLOW CAPACITY:		
Equation of Pipe	10	11
Factors affecting	2	1
Tables of	2	8, 10-18
Tests for	2	6, 9
See also Cement Lining and Flow Coefficients		
FLOW COEFFICIENTS:		
for Design	2	8
Tests of	2	6, 9
Williams-Hazen Formula	2	8
FLOW TABLES	2	8, 10-18
FLOW TESTS	2	6, 9
GRAY CAST IRON FITTINGS—see Standard A21.10	6	
GRAY CAST IRON PIPE:		
Design of	3	1
Flanged	7	2
History of	1	2
Installation of	3	1
Manufacture of	1	3
Metallurgy of	1	4
Standards for—see A21.1, A21.6, A21.8, A21.12	6	
HANDLING PIPE	3	1, 6
HISTORY OF:		
Cast Iron Pipe	1	1
Cement Lining	2	4
HYDRANT TEES	8	6, 7
INDUSTRIAL PIPING SYSTEMS, Use of Cast Iron Pipe In	5	5
INSTALLATION OF CAST IRON PIPE	3	
For methods of installation, see also Standards A21.1 and A21.50	6	
IRRIGATION SYSTEMS, Use of Cast Iron Pipe in	5	6
JOINTS—see Ball and Socket, Bell and Spigot, Flanged, Mechanical and Push-on Joint		

	SECTION	PAGE
JOINT DEFLECTION:		
Ball and Socket Joint	3	9
Mechanical Joint	3	7-8
Push-on Joint	3	7-8
JUTE, Weight of, by Joint	10	2
JOINTING PIPE	3	6
LEAD, Weight of, by joint	10	2
LEAD JOINT—see Bell and Spigot		
LEAKAGE, Allowable	3	10-11
MANUFACTURE OF:		
Fittings	1	7
Pipe	1	3
See also applicable Standard	6	
MECHANICAL JOINT:		
Deflection	3	7-8
Fittings:		
Anchoring Type	8	6
Standard A21.10	6	
History	1	2
Leakage, Allowable	3	10-11
Pipe—see A21.6, A21.8, A21.12	6	
Restrained	8	4
Retainer Glands	8	4
Standard for – A21.11	6	
in Subaqueous Pipelines	5	6
in Water Transmission and Distribution	5	1
METALLURGY OF:		
Ductile Iron Pipe	1	6
	4	2, 4
Gray Cast Iron Pipe	1	4
	4	2, 4
NODULAR IRON—see Ductile Iron		
OFFSETS—see Standard A21.10	6	