FLOS
Architectural

Fixture Type .....
Job Name .....

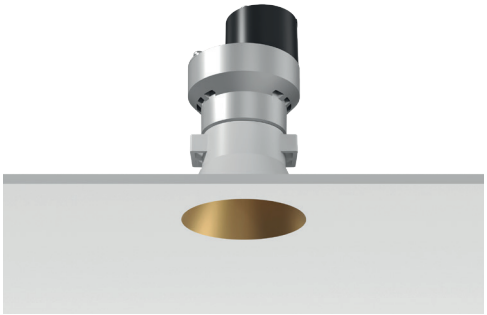

Kap 50 Round Fixed Non-IC

Non-IC Ceiling Recessed Trimless Downlight

Description

LED trim-less luminare for recessed mud-in mounting into plasterboard. Die-cast aluminum body with satin or metallic paint finish. A pre-installation frame is required. This LED downlight uses cutting edge technology which creates a higher powered downlight due to cooler operating electronics yielding 20% higher luminous flux than earlier models.

Lamp

Lamps Type	LED ARRAY
Wattage	7.3W
Output Nominal	670 lm, 720 lm
Color Temperature	2700K, 3000K
Color rendering	CRI 90

Optical

Beam Angle	15º/ 24º/ 49º
Lighting Type	Direct
Light Distribution	Symmetric

Physical

Material	Aluminum, Plastic
Aiming	Fixed
Weight	0.3 Lbs
Ingress Protection Rating	IP20
Finishes	Painted lacquer

B1 White 74 Black GL Matt Gold

Installation type	Ceiling
Environment	Indoor dry location

Dimensions

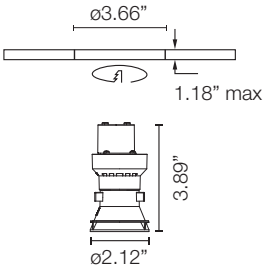

Certifications

c UL us LISTED

Photometrics

For current IES files please visit architectural.flosusa.com

Warranty

2 years from date of sale.

FLOS. USA
36 East 31st Street
Suite 402
New York N.Y. 10016
(800) 841.4011

For more information contact your representative or go to professional.flos.com/en-US/us/
©2026 Specifications and dimensions subject to change without notice. Issued 09.02.2026

c UL us LISTED

FLOS
Architectural

Fixture Type .....
Job Name .....

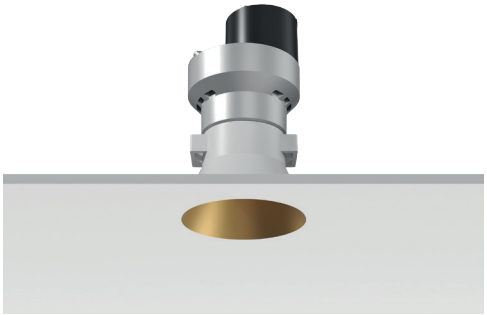

Kap 50 Round Fixed Non-IC

Non-IC Ceiling Recessed Trimless Downlight

Electrical & Control

Input Voltage	120-277V
Control	Dimmable 0-10V, Dali 2, ELV, Push
Driver	Remote
Current	200 mA

Performance

Maximum delivered output	595 lm
Efficacy	69.2 lm/W

Dimensions

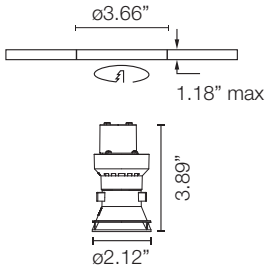

Notes

Integral LED. COB is not field replaceable.

Softening diffuser accessory provided.

Certifications

c UL us LISTED

Photometrics

For current IES files please visit architectural.flosusa.com

Warranty

2 years from date of sale.

FLOS. USA
36 East 31st Street
Suite 402
New York N.Y. 10016
(800) 841.4011

For more information contact your representative or go to professional.flos.com/en-US/us/
©2026 Specifications and dimensions subject to change without notice. Issued 09.02.2026

c UL us LISTED

FLOS
Architectural

Fixture Type .....
Job Name .....

Kap 50 Round Fixed Non-IC

Non-IC Ceiling Recessed Trimless Downlight

How to specify

0	5	.	7	3	0	0	.	B	1	.	9	S
Part Number								Finish		Dimming Protocol or Variant		

How to Specify ex. 05.7300.B1.9S

Part Number	CCT	CRI	Initial Lumens	Watts	Beam Angle	Finish	Variant
05.7300	2700	90	670	7.3W	15°	B1 = White 74 = Black GL = Gold	.9S
05.7305	3000		720				
05.7301	2700		670		24°		
05.7306	3000		720				
05.7302	2700		670		49°		
05.7307	3000		720				

FLOS. USA
36 East 31st Street
Suite 402
New York N.Y. 10016
(800) 841.4011

For more information contact your representative or go to professional.flos.com/en-US/us/
©2026 Specifications and dimensions subject to change without notice. Issued 09.02.2026

C UL US LISTED

FLOS
Architectural

Fixture Type .....

Job Name .....

Kap 50 Round Fixed Non-IC

Non-IC Ceiling Recessed Trimless Downlight

Photometries Optic Spot

2700K

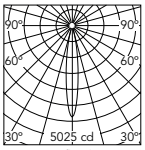

Luminous flux luminaire
543 lm

Beam Angle: 15°

h(m)	E(lx)	D(m)
1	5025	0.27
2	1256	0.53
3	558	0.80
4	314	1.07
5	201	1.33

@White (B1)

3000K

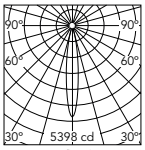

Luminous flux luminaire
583 lm

Beam Angle: 15°

h(m)	E(lx)	D(m)
1	5398	0.27
2	1349	0.53
3	600	0.80
4	337	1.07
5	216	1.33

@White (B1)

Photometries Optic Medium

2700K

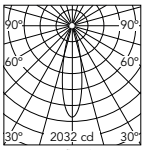

Luminous flux luminaire
488 lm

Beam Angle: 24°

h(m)	E(lx)	D(m)
1	2032	0.43
2	508	0.86
3	226	1.30
4	127	1.73
5	81	2.16

@White (B1)

3000K

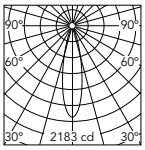

Luminous flux luminaire
524 lm

Beam Angle: 24°

h(m)	E(lx)	D(m)
1	2183	0.43
2	546	0.86
3	243	1.30
4	136	1.73
5	87	2.16

@White (B1)

Photometries Optic Flood

2700K

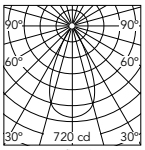

Luminous flux luminaire
496 lm

Beam Angle: 49°

h(m)	E(lx)	D(m)
1	720	0.91
2	180	1.83
3	80	2.74
4	45	3.66
5	29	4.57

@White (B1)

3000K

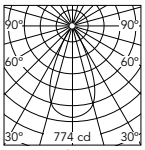

Luminous flux luminaire
532 lm

Beam Angle: 49°

h(m)	E(lx)	D(m)
1	774	0.91
2	193	1.83
3	86	2.74
4	48	3.66
5	31	4.57

@White (B1)

FLOS. USA
36 East 31st Street
Suite 402
New York N.Y. 10016
(800) 841.4011

For more information contact your representative or go to professional.flos.com/en-US/us/
©2026 Specifications and dimensions subject to change without notice. Issued 09.02.2026

c UL us LISTED

FLOS
Architectural

Fixture Type .....
Job Name .....

Kap 50 Round Fixed Non-IC

Non-IC Ceiling Recessed Trimless Downlight

Required Splice Box

Splice Box UL ELV & 0-10V Dimmable 200mA LED Driver 10W Size: 7” x 2.2” x 1.2”	Splice Box UL DALI & PUSH Dimmable 200mA LED Driver 10W Size: 7” x 2.2” x 1.2”
SP10W200MA-VAR-Y1	SP10W200MA-DAL-Y1
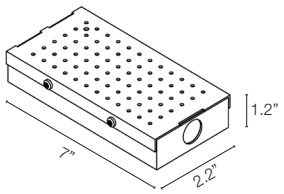	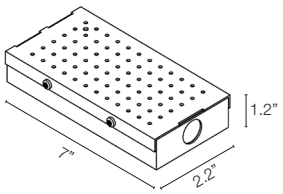

Required Accessories

Installation frame No Trim. Kap ø50.
08.9114.00
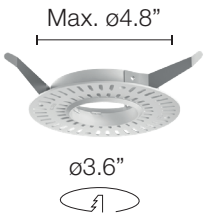

FLOS. USA
36 East 31st Street
Suite 402
New York N.Y. 10016
(800) 841.4011

For more information contact your representative or go to professional.flos.com/en-US/us/
©2026 Specifications and dimensions subject to change without notice. Issued 09.02.2026