PANIGALE

Owner's manual

ENGLISH

PANIGALE V4

Dear Ducatista,

thank you for trusting us with the purchase of your new Panigale V4.

We recommend that you **read the use and maintenance manual carefully**, to quickly get familiar with your Ducati and **make the most of all its features**. In the manual, we provide lots of useful advice and information on your **safety**, on how to **take care** of your bike and on how to maintain its value through **correct maintenance** by specialist Service Centres.

You can also find this manual in **digital format, always up-to-date, in the dedicated area of the Ducati website** and **in the MyDucati App**, which can be consulted both from a PC and a phone.

In this way, you will always have the **most up-to-date version of the manual** available and you will also find **information and frequently asked questions** regarding your bike and the world of Ducati.

You can send suggestions for improvement regarding the contents of this Use and maintenance manual to the following address: OwnerManual@ducati.com

This manual forms an integral part of the motorcycle and must be kept with it for its whole service life. If the motorcycle is resold, the manual must always be handed over to the new owner. The quality standards and safety of Ducati motorcycles are steadily improved as new design solutions, equipment and accessories are developed. While the information contained in this manual is current at the time of going to print, Ducati Motor Holding S.p.A. reserves the right to make changes at any time without notice and without any obligations. For this reason, the illustrations in this manual might differ from your motorcycle.

Important

Check the FAQs and tutorials dedicated to your bike on the Ducati website to keep up to date with all the latest news regarding its functions and features.
The information in the manual is current at the time of going to print. The quality and safety standards of Ducati motorbikes are constantly updated. Check on the Ducati website the functions and features in the updated Owner's Manual of your motorbike.

Any and all reproduction or spreading of the contents herein in whole or in part is forbidden. All rights reserved to Ducati Motor Holding S.p.A. Any request for written authorisation shall be addressed to this company, specifying the reasons for request. For any servicing or suggestions you might need, please contact our authorised service centres.

For further information, please contact us at:
contact_us@ducati.com
Our Advisors are available to give you suggestions and useful tips.

Important

For further information, please contact the Ducati Support by clicking on “Contact us” in the Services and Maintenance section of the www.ducati.com website.
Our Advisors are available to give you suggestions and useful tips.

Enjoy your ride!

Table of contents

Roadside Assistance 9
Roadside Assistance 9

Software updates 13
Software updates 13

Warranty information 14
General warranty conditions 14

Infotainment 21
Infotainment (if any).....21
Bluetooth device pairing and management (if any)..... 22
Phone (if any) 29
Music (if any) 32

General Information..... 36
Acronyms and abbreviations used in the Manual.....36
Warning symbols used in the manual 36
Intended use.....37
Rider's obligations 38
Rider's training.....39
Apparel 39
"Safety ""Best Practices""".....40
Refuelling..... 42
Carrying the maximum load allowed 43
Information about carrying capacity..... 43
Dangerous products - warnings 44
Vehicle identification number..... 46
Engine identification number 47

Main components and devices 48
Position on the vehicle 48
Tank filler plug 49
Seat lock..... 50
Maintaining the battery charge..... 52
Side stand 54
Bluetooth control unit..... 56
Steering damper 58
Front fork adjustment 59

Adjusting the rear shock absorber 61
Setting the suspensions..... 63

Controls 65

Position of motorcycle controls 65
Switchgears 66
Light control 69
Ignition switch and steering lock 75
Keys 76
Restoring motorcycle operation via the PIN code 78
Clutch lever 80
Throttle twistgrip 81
Front brake lever 82
Rear brake pedal 83
Gear change pedal 84
Adjusting the position of the gearchange pedal and rear brake pedal 85

Riding the motorcycle 86

Motorcycle running-in period 86
Pre-ride checks 87
Engine start/stop 90
Moving off 93
Braking 93
Anti-Lock Braking System (ABS) 94
Stopping the motorcycle 94
Parking 94
Refuelling 96
Tool kit and accessories 99

Instrument panel (Dashboard) 100

Instrument panel 100
Warning lights 101
Display mode (Info Mode) 105
Riding Mode 111
Engine rpm indication 114
Parameter menu and quick level change 117
Function and trip info menu 121
Lap 128
Setting Menu 137
Setting Menu - Service 139
Setting Menu - Riding Mode 143
Setting Menu - Riding Mode - Engine 145
Setting Menu - Riding Mode - ABS 146
Setting Menu - Riding Mode - DAVC 153
Setting Menu - Riding Mode - DAVC - DTC 155

Setting Menu - Riding Mode - DAVC - DWC 161
Setting Menu - Riding Mode - DAVC - DSC 167
Setting Menu - Riding Mode - EBC 171
Setting Menu - Riding Mode - DQS 176
Setting Menu - Riding Mode - Info Mode 178
Setting Menu - Riding Mode - Default and All Default 180
Setting Menu - Pin Code 182
Setting Menu - Lap 187
Setting Menu - Backlight 191
Setting Menu - DRL 194
Setting Menu - Date and Time 195
Setting Menu - Tyre Calibration 198
Setting Menu - DDA 204
Setting Menu - Turn indicators 206
Setting Menu - Units 208
Setting Menu - Info 212
Assisted start (DPL) 213
Heated handgrips 220
Warning displaying 222
Error warnings 227

Main use and maintenance operations 229
Removing the fairing 229
Change air filter 229
"Checking coolant level and topping up, if necessary" 230
Checking brake and clutch fluid level 231
Checking brake pads for wear 233
Charging the battery 234
Checking drive chain tension 241
Lubricating the drive chain 243
Replacing the high and low beam bulbs 248
Rear turn indicators 248
Aligning the headlight 249
Adjusting the rear-view mirrors 251
Tubeless tyres 252
Check engine oil level 254
Cleaning the motorcycle 256
Cleaning and replacing the spark plugs 258
Storing the motorcycle 259
Important notes 260
Vehicle transport 261

Scheduled maintenance chart 262

Scheduled maintenance chart: operations to be carried out by the dealer 262
Scheduled maintenance chart: operations to be carried out by the customer 266

Technical data 267
Weights 267
Dimensions 268
"Fuel, lubricants and other fluids" 269
Engine 271
Timing system 272
Performance data 273
Spark plugs 273
Fuel system 273
Brakes 273
Transmission 274
Frame 275
Wheels 275
Tyres 275
Suspension 276
Exhaust system 276
Available colours 276
Electric system 278

Open source software 282
Information about open source software . 282

Declarations of conformity 283
Declarations of conformity 283

Roadside Assistance

Roadside Assistance

ACI Global Servizi

Important

The "ACI Global Services" roadside assistance is in force only in the following countries:
Denmark, Belgium, France, Luxembourg, Switzerland, Ireland, United Kingdom, Italy, Norway, Holland, Spain, Austria, Germany, Sweden, Portugal, Canary Islands, Cyprus, Croatia, Czech Republic, Estonia, Latvia, Lithuania, Finland, Greece, Hungary, Malta, Poland, Serbia and Montenegro, Slovakia, Slovenia, Turkey, Ukraine.

The Ducati Card Assistance Programme, created in collaboration with Ducati and ACI Global Services, offers assistance in case of breakdown and/or accident to the Ducati Customer. The service is active 24 hours a day, 365 days a year, for 24 months (in case of extended warranty the relevant conditions will apply) from the date of delivery of the motorcycle or for the period of coverage of the Ever Red warranty extension.

The roadside assistance services include:

- Roadside assistance and towing
- Information Service
- Transport of passengers following roadside assistance
- Return of passengers or continuation of the journey
- Recovery of the repaired or found motorcycle
- Repatriation of the motorcycle from abroad
- Search and sending of spare parts abroad
- Hotel expenses
- Recovery of the motorcycle off the road in case of accident
- Advance payment of bail abroad

and may be requested in the following countries:
Andorra, Austria, Belgium, Bulgaria, Croatia, Cyprus, Denmark, Estonia, Finland, France (including Corsica, roads open to ordinary traffic) Fyrom (the former Yugoslav Republic of Macedonia), Germany,

Gibraltar, Greece, Ireland, Iceland, Italy (including San Marino and the Vatican), Latvia, Lithuania, Luxembourg, Malta, Montenegro, Norway, the Netherlands, Poland, Portugal, Monaco, United Kingdom, Czech Republic, Romania, Serbia, Slovakia, Slovenia, Spain, Sweden, Switzerland, Turkey, Ukraine, Hungary.

Important
All information is detailed and available on the Ducati website of the respective country.

Call Centre telephone numbers

To request Assistance:
Event in the country of origin: call the toll-free number for your country as specified in the first column of the table.
Event out of the country of origin: call the paid number for your country including the prefix, as specified in the second column of the table.
Should you have any problems in calling the number for your country from abroad, dial the phone number of the country where the Event has occurred.

Attention
If phone numbers are temporarily inactive due to a malfunction to telephone lines, the Beneficiary may call the number of ACI Global Servizi Operations Centre in Italy: +39-02 66165610.

Andorra	+34-91-594 93 40	+34-91-594 93 40
Austria	0800-22 03 50	+43-1-25 119 19398
Belgium	0800-14 134	+32-2-233 22 90
Bulgaria	(02)-986 73 52	+359-2-986 73 52
Cyprus	25 561580	+357-25 561580
Croatia	0800-79 87	+385-1-464 01 41
Denmark	80 20 22 07	+45-80 20 22 07
Estonia	(0)-69 79 199	+372-69 79 199
Finland	(09)-77 47 64 00	+358-9-7747640 0
France (+Corsica)	0800-23 65 10	+33-4-72 17 12 83
FYROM	(02)-3181 192	+389-2-3181 192

Germany	0800-27 22 774	+49-89-76 76 40 90
Gibraltar	91-594 93 40	+34-91-594 93 40
Greece	(210)-9462 058	+30-210-9462 058
Ireland	1800-304 500	+353-1-617 95 61
Iceland	5 112 112	+354-5 112 112
Italy	800.744.444	+39 02 66.16.56.10
Latvia	67 56 65 86	+371-67 56 65 86
Lithuania	(85)-210 44 25	+370-5-210 44 25
Luxembourg	25 36 36 301	+352-25 36 36 301
Malta	21 24 69 68	+356-21 24 69 68
Monaco	+33-4-72 17 12 83	+33-4-72 17 12 83
Montenegro	0800-81 986	+382-20-234 038
Norway	800-30 466	+47-800-30 466
Holland	0800-099 11 20	+31-70-314 51 12
Poland	061 83 19 885	+48 61 83 19 885

Portugal	800-20 66 68	+351-21-942 91 05
United Kingdom	00800-33 22 88 77	00800-33 22 88 77
Czech Republic	261 10 43 48	+420-2-61 10 43 48
Romania	021-317 46 90	+40-21-317 46 90
Serbia	(011)-240 43 51	+381-11-240 43 51
Slovakia	(02)-492 05 963	+421-2-49 20 59 63
Slovenia	(01)-530 53 10	+386-1-530 53 10
Spain	900-101 576	+34-91-594 93 40
Sweden	020-88 87 77	+46-771-88 87 77 (+46 8 5179 2873)
Switzerland (+Liechtenstein)	0800-55 01 41	+41 58 827 60 86
Turkey	(216) 560 07 50	+90 216 560 07 50

Ukraine	044-494 29 52	+380-44-494 29 52
Hungary	(06-1)-345 17 47	+36-1-345 17 47

Software updates

Software updates

Some components of the motorbike are operated by or involve the use of software. Such software may be subject to or require updates.

- Any updates that may be necessary to ensure the safety of the motorbike will be communicated by Ducati and made available for installation at the Ducati Service network.
- Information on updates that may be necessary to maintain the conformity of the motorbike is published on the Ducati website and the updates are made available, for two years from the date of purchase of the motorbike or for the longer term of the conventional warranty (if active for the motorbike), for installation at the Ducati Service network.
- Further updates and new versions of the software will be made available, in compliance with the motorbike maintenance schedule indicated in this Owner's Manual, for installation at the Ducati Service network when the motorbike is serviced.

We invite you to periodically consult the section of the Ducati website dedicated to updates and to download and install the My Ducati App to keep informed of available updates.

Attention

In order to maintain the motorbike's legal and, if applicable, conventional warranty of conformity (if applicable), you are required to install the updates made available as soon as possible and, in any case, within a reasonable period of time, also taking into account the importance of the update.
If the updates are not installed within a reasonable period of time, Ducati shall not be liable for any conformity or safety defects deriving from the failure to install the update.

Warranty information

General warranty conditions

1. Warranty content

1.1 Ducati Motor Holding S.p.A. - A Sole partner company- a Company of the Audi Group, with headquarters in via Cavalieri Ducati no. 3, 40132, Bologna, Italy (hereafter “Ducati”) - guarantees anywhere in the world where its official service network is present (see "World Dealer Guide" available at www.ducati.com) that all of its new motorcycles, manufactured for road use, for a period of twenty-four (24) months with no mileage/km limitation from the delivery date of the motorcycle to the first owner, shall be free of defects in workmanship as ascertained and recognised by Ducati.

1.2 In such cases, the Customer has the right to the repair or replacement of defective parts, free of charge.

1.3 The defective parts replaced under warranty become the property of Ducati.

1.4 The new parts replaced under warranty or repaired are covered by warranty for the remaining outstanding warranty period of the motorcycle.

1.5 Also, through a specific insurance policy taken out with ACI GLOBAL S.p.A, Ducati offers the Customer additional roadside assistance services in the Countries listed in the "Owner's manual", according to the specific terms and procedures reported therein, which are here fully referred to.

1.6 These general warranty conditions (hereinafter the "Warranty Conditions") do not affect the remedies for lack of conformity against the seller that the consumers have at their disposal by law, free of charge, in accordance with European regulations, as implemented in Italy by Legislative Decree no. 206 of 6 September 2005, and following amendments (so called Codice del Consumo or Consumer Code): In the event any one provision of these Warranty Conditions should conflict with mandatory law in force in the country of residence or domicile of the "consumer" such provision shall be treated as null and void.

2. Exclusions

2.1 This warranty offered by Ducati is not applicable to:

- a) motorcycles used in sporting competitions of any kind;
- b) motorcycles used in rental service;
- c) parts subject to wear and tear during normal operation of the motorcycle (such as for example: tyres, final drive, belts, flexible cables, spark plugs, brake and clutch parts subject to friction, the vehicle battery if not properly maintained using the Ducati battery maintainer);
- d) defects deriving from oxidation or caused by atmospheric agents extraordinary environmental conditions or circumstances or due to irregular or improper washing of the motorcycle;

2.2 Without prejudice to the provisions of the mandatory provisions for the protection of the consumer relating to the legal warranty pursuant to the national regulations transposing and implementing European legislation in the countries belonging to the European Union, the Customer cannot exercise this conventional warranty for damage/defects that are unrelated to the production process such as, by way of example, any damage/defect deriving from:

- negligence in the execution of the Scheduled Maintenance Plan specified by Ducati in article 5 below;
- incorrect maintenance or repair operations carried out by parties other than the Ducati Authorised Dealers and/or Service Centres
- assembly of spare parts or accessories whose use is not approved by Ducati;
- failure to comply with the prescriptions for the use of the vehicle and its equipment as indicated in the Owner's Manual;
- modifications to the vehicle made by the Customer and / or third parties without the express approval of Ducati;
- Customer's failure to adhere to any recall campaigns planned by Ducati.

3. Procedure for claiming the warranty

3.1. To activate this warranty and maintain its validity, the Customer is required to:

- a) report any motorcycle defects to one of the Ducati Dealers and/or Authorised Service Centres listed on the website www.ducati.com

as soon as possible with respect to the time of their discovery, in order to reduce the consequences that such defects may have on the functionality and safety of the motorcycle.

- b) comply with the scheduled maintenance plan foreseen in art. 5 of these warranty conditions;
- c) keep adequate documentation of any maintenance and/or repair work carried out on the vehicle (service booklet/receipts/invoices with details of the work carried out and the parts used). A copy of this documentation should be given to the Dealer/Authorised Service Centre from whom the warranty claim is made, who will be able to verify that the work has been carried out correctly.

3.2 For tracking purposes necessary for the implementation of safety and technical update policies in the event of a change of motorcycle ownership, the new owner must notify Ducati of the change of ownership advising the Ducati Customer Service at the contact information available at www.ducati.com or at the Ducati Authorised Dealers and/or Service Centres within thirty (30) days after change of ownership date.

4. Limitations of liability

4.1 Without prejudice to the national regulations applicable to the "consumer" and relating provisions on manufacturer liability, Ducati shall not be held liable in case of damage to people and/or property caused by the motorcycle or while using the same.
4.2 Any defects or delays in the repairs or replacements relating to the motorcycle caused by Ducati Authorised Dealers and/or Workshops shall not give the buyer the right to claim damages of any kind from Ducati, nor to extend the warranty per the present Warranty Conditions, without prejudice to the Customer's rights and actions with respect to the Ducati Authorised Dealer and/or Workshop that may be negligent/defaulting.
4.3 This warranty, under the conditions specified herein, is the only conventional warranty offered by Ducati, without prejudice to the possibility of extension through additional warranties offered by Ducati.
4.4 Ducati reserves the right to make changes and improvements to any model of its motorcycles, without the obligation to make said changes to motorcycles already sold.
4.5 These Warranty Conditions also extend to subsequent owners of the motorcycle, provided that the provisions under art. 3 above are complied with.

In any case, Ducati shall not be held liable for defects of the motorcycle attributable to the failure to notify Ducati of the change of ownership of the same.
4.6 Except as for the "consumer", or as otherwise provided by a mandatory regulation in force in the country of the Customer, the Court of Bologna (Italy) shall have sole jurisdiction over any controversies that may arise in connection with these Warranty Conditions.
4.7 These Warranty Conditions are governed by Italian law.

5. Scheduled maintenance plan and pre-delivery

5.1 The pre-delivery operations are carried out by the seller.
5.2 Ducati has defined the scheduled maintenance plan included in the "Owner's Manual" to keep their motorcycles at the best possible levels of efficiency, performance and safety.
5.3 Exact observance of the coupons, under the terms set forth herein, is a necessary condition to ensure the maintenance of the vehicle in correct usage status and the validity of this warranty. The following compulsory coupons must be carried out and paid for:

- first coupon: within six (6) months of delivery of the motorcycle to the Customer, or within the first 1000 km/600 miles travelled;
- second coupon, upon reaching the mileage specified in the maintenance schedule and in any case within twelve (12) months from previous service coupon.

Customer is solely liable for all costs related to coupons (labour and materials), including the one at 1,000 km /600 miles.
5.4 Every maintenance operation on the motorcycle must be carried out in compliance with Ducati's

recommendations and procedures, without limitations, including those reported in the "Owner's Manual". Any defect/damage to the vehicle caused by improper or insufficient maintenance will preclude the applicability of the warranty.
5.5 In order to certify that the operations specified for each service coupon have been duly performed, the Dealer and/or Authorised Ducati Service Centre shall place their stamp and write the necessary notes on the Service Booklet supplied with the motorcycle, and the customer shall preserve the receipts/ invoices for the service coupons that detail the operations performed. Warranty performance may be subject to the review of these documents by Ducati Technical Service.

Attention
A reference to ‘you’ is a reference to the Customer.

If you purchased your motorbike in Australia:
Our goods come with guarantees that cannot be excluded under the Australian Consumer Law. You are entitled to a replacement or refund for a major failure and compensation for any other reasonably foreseeable loss or damage. You are also entitled to have the goods repaired or replaced if the goods fail to be of acceptable quality and the failure does not amount to a major failure.

If you purchased your motorbike in New Zealand:
Our goods come with guarantees that cannot be excluded under the Consumer Guarantees Act 1993. You are entitled to a replacement or refund for a failure of substantial character and compensation for any other reasonably foreseeable loss or damage. You are also entitled to have the goods repaired or replaced if the goods fail to be of acceptable quality and the failure does not amount to a failure of substantial character.

The benefits given to you by the warranty set out in this Owner's manual are in addition to any other rights and remedies you have under a law in relation to the motorcycle. If any provision of the general warranty conditions set out in this booklet should exclude or limit any rights under the Australian Consumer Law or the Consumer Guarantees Act 1993 (National Law), such provision is null and void. In circumstances where your rights under the National Law are greater than your rights under the Warranty, Ducati will honour your rights under the National Law.

To make a claim under the Warranty you must notify one of the Ducati Authorised Dealers and/or Workshops listed in the "Dealer Locator" (available at www.ducati.com) of any defects of the motorcycle within two (2) months of becoming aware of the defect. If you have any questions, you may contact Ducati ANZ Pty Ltd ACN 636 589 430 at Level 6, 895 South Dowling Street, Zetland NSW 2017 or by email at contactus@ducati.com or by phone on 1300 11 26 06 (AU) / 0800 382 284 (NZ).

You must bear the expense of claiming under the Warranty.

Infotainment

Infotainment (if any)

If the Bluetooth control unit is installed, the infotainment system is activated.
The infotainment system allows devices such as smartphones, rider and passenger helmet intercoms and satellite navigator to be connected via Bluetooth, allowing incoming and outgoing phone calls to be managed and music on the smartphone to be played.

- For pairing and managing Bluetooth devices, see page 22.
- For managing phone calls, see page 29.
- For managing the music player see page 32.

Bluetooth device pairing and management (if any)

This function allows the user to manage any paired Bluetooth devices and add more. This function is only available if the Bluetooth module is installed to the bike.

- Enter the Setting menu (see page 137).
- Use buttons (1) and (2) to select item “Bluetooth” and press the ENTER button (3).

This menu includes the "Associated Devices" option to view and delete any paired devices and the "Pairing" option to pair a new device.
Select the required option and press the ENTER button (3).

To exit the menu and return to the previous screen, select the “Back” item and press the ENTER button (3).

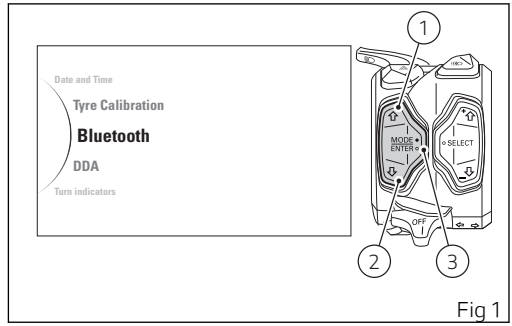

Fig 1

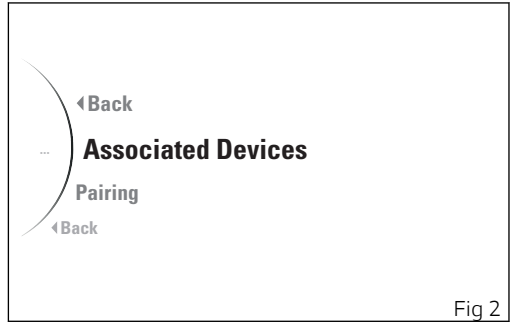

Fig 2

Search and pairing of a new device

To perform the "Pairing" procedure of one or more Bluetooth devices it is necessary to set the device to ensure it can be detected by the control unit, so turn device on and make it visible to other devices.
A Bluetooth device in visible mode transmits a wireless signal allowing it to be detected by other devices. This function is called pairing mode.
The motorcycle can be equipped with a Bluetooth control unit that works as a hub between the various supported electronic devices relying on a Bluetooth communication interface.

Note

Maximum of 2 smartphones, 1 rider earphone, 1 passenger earphone, 1 satellite navigator can be paired up.

Attention

Smartphone and Bluetooth Headset device manufacturers may incorporate certain changes within the standard protocols over the course of the lifecycle of the device (Smartphones and Earphones).

Attention

These changes are outside the control of Ducati and may result in Smartphone and Bluetooth Headset devices functionality becoming impaired (sharing Music, multimedia player, etc.) and may equally affect some types of Smartphones (depending on supported Bluetooth profiles). This is why Ducati cannot guarantee multimedia player proper operation for:

1) the entire range of headphones and Smartphones available on the market;
2) Smartphones that do not support the required Bluetooth profiles.

Check that your Smartphone supports the following profiles:

- MAP profile: for a correct display of SMS and MMS notifications;
- PBAP profile: for a correct display of the Smartphone contact list.

To perform pairing procedure use buttons (1) and (2) to select "Pairing" and press the ENTER button (3). As you enter this function, the instrument panel displays the following items: “Smartphone”, “Rider”, “Passenger”, “Navi”.
Use buttons (1) and (2) to select the type of device for which you wish to start the device search procedure. Once the device is highlighted, press the ENTER button (3).
To exit the menu and return to the previous screen, select the “Back” item and press the ENTER button (3).

The instrument panel displays "Wait..." during device search phase. The pairing ends automatically when devices are detected within the range. This search phase takes 60 seconds.
At the end of this operation, a list of all found devices that can be paired is displayed: the list can show a maximum of 20 devices.

Note
The list of devices found within the range during the pairing stage does not include already paired devices even if their Bluetooth connection is ON.

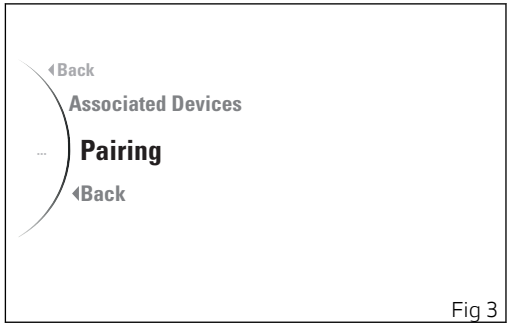

Fig 3

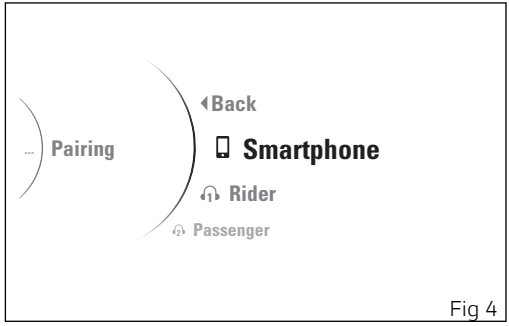

Fig 4

Use buttons (1) and (2) to select the device you wish to pair and press the ENTER button (3).

The instrument panel shows "Pairing": to confirm the selected device Pairing press the ENTER button (3) again.
If you do not wish to proceed with pairing, highlight the "Back" indication and press the ENTER button (3).
By confirming the device pairing, the instrument panel will display “Wait...”.
As soon as the procedure is completed, the device is added to the list of associated devices.

If Pairing is not successful, the "Pairing error" message will be displayed.

If you wish to connect a Bluetooth navigator, the connection procedure shall be completed on the navigator, by selecting the connection with the motorcycle Bluetooth control unit. If user does not complete the pairing procedure on the Navigator side within 90 seconds, pairing procedure cannot be completed.

Display of paired devices

To view the devices already associated, access the SETTING MENU, use buttons (1) and (2) to select "Bluetooth" and press the ENTER button (3). Use buttons (1) and (2) to select "Associated Devices" and press the ENTER button (3).
A list of all associated devices is displayed: the list can show a maximum of 5 devices. For each device the relevant icon indicating the type is shown on the side.
To exit the menu and return to the previous screen, select the “Back” item and press the ENTER button (3).

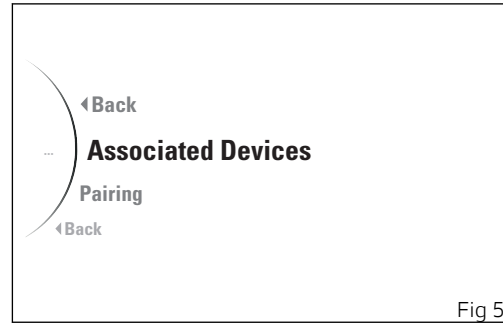

Fig 5

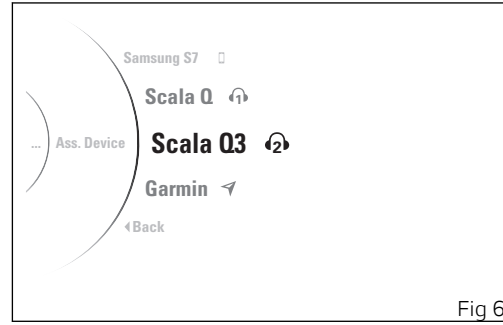

Fig 6

Note
Maximum of 2 smartphones, 1 rider earphone, 1 passenger earphone, 1 satellite navigator can be paired up.

If no associated devices are present, the instrument panel will show “No Device”.

Deleting associated device

This function allows deleting a previously associated device.
Access the already associated devices page, use buttons (1) and (2) to select "Associated Devices" and press the ENTER button (3).

Use buttons (1) and (2) to highlight and select the device to be deleted from the list.
Press the ENTER button (3).

The instrument panel shows "Delete" and press the ENTER button (3) again to confirm.
If you do not wish to delete it, highlight the "Back" indication and press the ENTER button (3).
By confirming the device deletion, the instrument panel will display “Wait...”.
As soon as the procedure is completed, the device is removed from the list of associated devices.

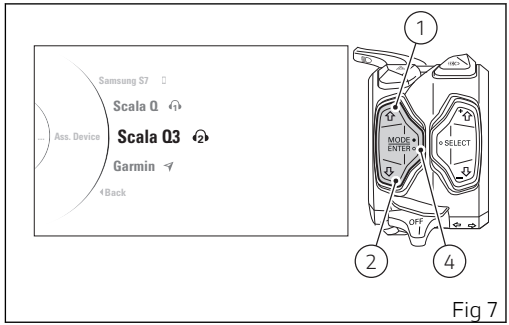

Fig 7

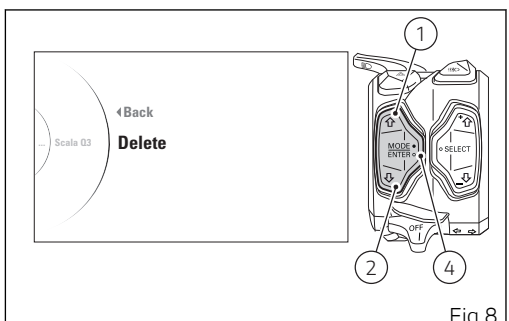

Fig 8

Paired Bluetooth device icons

Once paired, Bluetooth devices are displayed as follows:

1) smartphone connected;
2) rider earphones connected;
3) passenger earphones connected;
4) rider earphones connected and passenger earphones paired;
5) rider earphones paired and passenger earphones connected;
6) rider and passenger earphones connected;
7) satellite navigator connected.

Icons are light blue if the corresponding device is connected. They are grey if the corresponding device is paired but not connected.

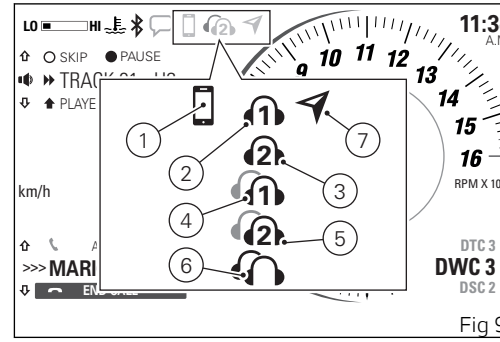

Fig 9

Phone (if any)

If the Bluetooth module is present and a smartphone is connected, the "LAST CALLS" function is available only in the Road Info Mode (see page 105) within the function menu (see page 121), which allows viewing the list of the last calls missed, made or received.
For the Bluetooth pairing procedure see page 22.

Use buttons (1) and (2) to select item "LAST CALLS" (A).
Press the ENTER button (3): when opening this function, a list of maximum 7 calls is displayed - these could be missed, made or received calls.
The instrument panel displays the corresponding name(s) or phone number(s). Use buttons (1) and (2) to scroll the list and press the ENTER button (3) to call the displayed name or phone number.

If list includes no calls, the instrument panel displays "EMPTY" within the function menu.

To exit the function and go back to the previous screen, press button (2) for 2 seconds.

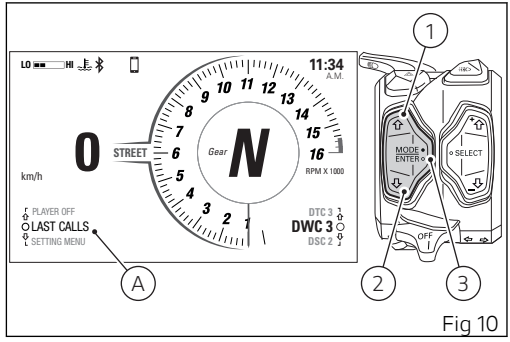

Fig 10

Incoming call

During an incoming call:
1) to answer the call, press button (1);
2) to reject the call press button (2);
3) to end the call once accepted, press button (2).

If there is an incoming call while the Player is active, the latter is paused throughout the phone call and will resume operation when call is over.

Note

It is not possible to make a call by selecting the name/number from the contact list through the function buttons.

Recall function

During 5 seconds after hang-up, the rectangle corresponding to the Recall function is activated to allow the recall. After this 5 second time, the rectangle of the Recall function is disabled.
To activate the Recall function within the 5 seconds, press button (1).

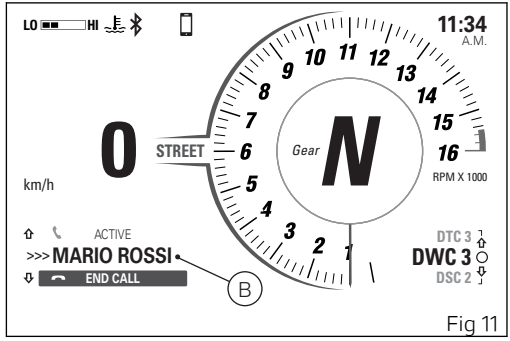

Fig 11

Missed call

In case of missed calls from the moment the smartphone is connected to the bike to the moment it is disconnected, the missed call symbol (C) will be displayed.
The number of missed calls is not displayed.

Messages received

In case of messages received on the connected smartphone, the unread message symbol (D) is displayed.
The number of unread messages is not displayed.

Both symbols flash for 3 seconds and then stay steady on the instrument panel for 57 seconds.

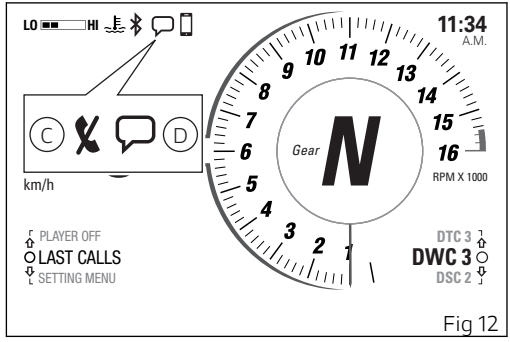

Fig 12

Music (if any)

If the Bluetooth module is present and a smartphone is connected, the "PLAYER" function is available only in the Road Info Mode (see page 105) within the function menu (see page 121), which allows the activation, deactivation and management of the player.
For the Bluetooth pairing procedure see page 22.

Use buttons (1) and (2) to select item "PLAYER" (A). The function can be set to “OFF” or “ON”.

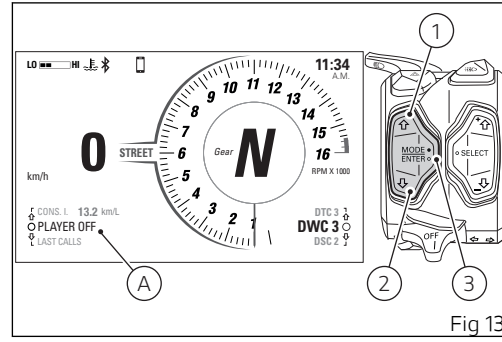

Fig 13

Music player control enabling

If the music player control is set to “OFF” (Fig 13), press the ENTER button (3) to activate it.
With the music player control active, the display shows the title of the track currently being played on the connected smartphone (B), together with the available controls (C), and the “EXIT” indication preceded by the black arrow facing downwards (D).

Note
The full name of the track is displayed once, scrolling the characters from right to left, then only the first characters are displayed. If the title of the track is not available, “NOT AVAILABLE” will be displayed.

Music player controls

When the control is active, button (1), button (2) and ENTER button (3) are used by the instrument panel only for the music player controls. In particular:

- Play/Pause, keep the ENTER button (3) pressed for 2 seconds;
- Go to next track “SKIP”, press the ENTER button (3);
- Increase the volume “+”, press button (1);
- Decrease the volume “-”, press button (2);

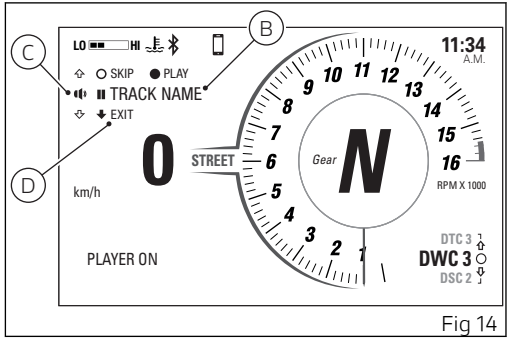

Fig 14

- Quit the music player control, hold button (2) pressed for 2 seconds.

Quit the active music player control (ON)

To exit the music player control and keep it active, for example with the track being played, press button (2) for 2 seconds.

Then buttons (1), (2) and ENTER (3) go back to their “standard” functions for the management/control of the instrument panel and are no longer used for the music player functions.
After its activation, the function is shown within the menu as “PLAYER ON” (F) and a black arrow up is displayed underneath the track title, followed by “PLAYER CONTROL” (E).

Note
With the player on, even if you change function (e.g. TRIP 1), track title remains displayed.

Reactivating the music player control (ON)

To resume music player controls, view PLAYER ON function and press button (1) for 2 seconds.

Buttons (1), (2) and ENTER (3) will be again used by the instrument panel only for the music player controls (Fig 14).

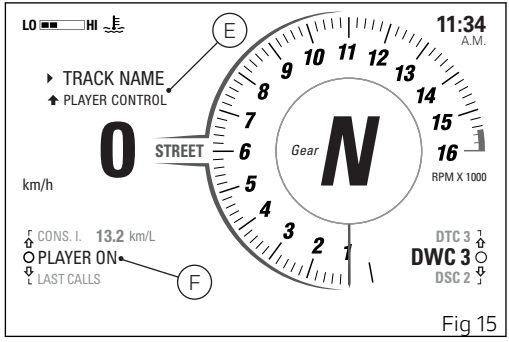

Fig 15

Music player control disabling

To disable music player and also stop current track playing, select the PLAYER ON function and press the ENTER button (3).
The function is then shown as “PLAYER OFF” (Fig 13).

Note
If the rider helmet/intercom is connected in addition to the smartphone, the tracks will be listened through the helmet headphones.

Note
If the LAP function is active, music player activation (PLAYER ON) will stop the LAP functions and set it to OFF.

Note
If music player is active (PLAYER ON) and is playing a song from the smartphone, LAP function activation will stop the player and set it to PLAYER OFF.

General Information

Acronyms and abbreviations used in the Manual

ABS	Anti-lock Braking System
DDA	DUCATI Data Acquisition
DPL	Ducati Power Launch
DQS	DUCATI Quick Shift
DSB	Dashboard
DSC	Ducati Slide Control
DTC	DUCATI Traction Control
DWC	DUCATI Wheelie Control
EBC	DUCATI Engine Brake Control
ECU	Engine Control Unit
GPS	Global Positioning System
IMU	Inertial Measurement Unit

Warning symbols used in the manual

Several kinds of warnings are used as an alert of the possible hazards for you or other persons such as:

- Safety labels on the motorcycle;
- Safety messages preceded by a warning symbol and either WARNING or IMPORTANT.

Attention

Failure to comply with these instructions may put you at risk, and could lead to severe injury or even death of the rider or other persons.

Important

Possibility of damaging the motorcycle and/or its components.

Note

Additional information about the current operation.

The terms RIGHT and LEFT are referred to the motorcycle viewed from the riding position.

Intended use

This motorcycle must be ridden on asphalt or on flat and even surfaces, only. This motorcycle may not be used for riding on dirt trails or for off-road riding.

Attention

Off-road riding may lead to loss of control and result in vehicle damage, personal injuries or even death.

Attention

This motorcycle may not be used to tow any trailers or with a side-car attached; this can lead to loss of control and result in an accident.

Attention

The total weight of the motorcycle in running order including rider, luggage and additional accessories should not exceed 370kg/816 lb.

Important

Using the motorcycle under extreme conditions, such as very damp and muddy roads or dusty and dry environment, could cause above-average wear of components like the drive system, the brakes or the air filter. If the air filter is dirty, the engine could get damaged. Therefore, this might translate in required service or replacement of the wear parts earlier than specified in the scheduled maintenance chart.

Rider's obligations

All riders must hold a valid licence.

Attention

Riding without a licence is illegal and is prosecuted by law. Always make sure you have your licence with you when riding. Do not let inexperienced riders or persons without a valid licence use your motorcycle.

Do not ride under the influence of alcohol and/or drugs.

Attention

Riding under the influence of alcohol and/or drugs is illegal and is prosecuted by law.

Do not take prescription or other drugs before riding unless you have consulted your doctor about their side effects.

Attention

Some medications and drugs may cause drowsiness or other effects that slow down reaction time and the rider's ability to control the motorcycle, possibly leading to an accident.

Some states require vehicle insurance.

Attention

Check your state laws. Obtain insurance coverage and keep your insurance document secure with the other motorcycle documents.

To protect rider and passenger safety, some states mandate the use of a certified helmet.

Attention

Check your state laws. Riding without a helmet may be punishable by law.

Attention

Riders without helmets are more likely to suffer severe bodily injury or die if they are in an accident.

Attention

Check that your helmet complies with safety specifications, permits good vision, is the right size for your head, and carries a certification label indicating that it conforms to the standards in force in your state. Road traffic laws differ from state to state. Learn about traffic laws in your state before riding and always obey them.

Rider's training

Accidents are frequently due to inexperience. Riding, manoeuvres and braking must be performed in a different way than on the other vehicles.

Attention

Untrained riders or a wrong use of the vehicle may lead to loss of control, serious injuries or even death.

Apparel

Riding gear is very important for safety. Unlike cars, a motorcycle offers no impact protection in an accident.

Proper riding gear includes helmet, eye protection, gloves, boots, back protector, long sleeve jacket and long trousers.

- The helmet must meet the requirements listed at "Rider's obligations"; if your helmet does not have a visor, use suitable eye wear;
- Use certified, five-finger gloves made from leather or abrasion-resistant material; with knuckle protectors and reinforcements on the fingers;
- Riding boots or shoes must have non-slip soles and offer ankle protection;
- The back protector must be certified and sized based on the physical constitution of the rider, according to the manufacturer's specifications;
- Jacket, trousers or riding suit must be certified, made from leather or abrasion-resistant material and have high-visibility colours and inserts. Select products with certified protectors.

Important

Never wear loose clothing, items or accessories that may become tangled in motorcycle parts.

Important

For your safety, always wear suitable protective gear, regardless of season and weather.

Important

Have your passenger wear proper protective clothing.

"Safety ""Best Practices"""

These few simple operations are critical to people safety and to preserving the full performance of your motorcycle. Never forget to perform them before, while and after riding.

Important

Closely follow the indications provided at chapter "Riding the motorcycle" during the running-in period.
Failure to follow these instructions releases Ducati Motor Holding S.p.A. from any liability whatsoever for any engine damage or shorter engine life.

Attention

Before riding your motorcycle, become familiar with the controls you will need to use when riding.

Perform the checks specified in chapter “Checks before riding” before each ride.

Attention

Failure to carry out these checks before riding may lead to motorcycle damage and injury to rider.

Attention

Start the engine outdoors or in a well ventilated area. The engine should never be started or run indoors.
Exhaust gases are poisonous and may lead to loss of consciousness or even death within a short time.
Use proper body position while riding.

Important

Rider must hold the handlebar with both hands at ALL TIMES while riding.

Important

Rider should keep his feet on the footpegs when the motorcycle is in motion.

Important

Be very careful when tackling road junctions, or when riding in areas near exits from private grounds, car parks or on slip roads to access motorways.

Important

Be sure you are clearly visible and do not ride within the blind spot of vehicles ahead.

Important

ALWAYS signal your intention to turn or pull to the next lane in good time using the suitable turn indicators.

Important

Park your motorcycle where no one is likely to knock against it, and use the side stand. Never park on uneven or soft ground, or your motorcycle may fall over.

Important

Visually inspect the tyres at regular intervals for detecting cracks and cuts, especially on the side walls, bulges or large spots that are indicative of internal damage. Replace them if badly damaged. Remove any stones or other foreign bodies caught in the tread.

Attention

Engine, exhaust pipes and silencers stay hot long after the engine is switched off; pay particular attention not to touch the exhaust system with any body part and do not park the vehicle next to flammable material (wood, leaves etc.).
Do not cover the motorbike with the canvas, when the engine and exhaust system are hot, to avoid damaging it.

Refuelling

Fuel label

Fuel identification label

Refuel outdoors with engine off.
Do not smoke or use open flames while refuelling.
Be careful not to spill fuel on engine or exhaust pipe.
Never completely fill the tank when refuelling. Fuel should never be touching the rim of filler recess.

When refuelling, avoid breathing the fuel vapours and prevent fuel from reaching your eyes, skin or clothes.

Attention

The motorcycle is only compatible with fuel having a maximum content of ethanol of 10% (E10). Using fuel with ethanol content over 10% is forbidden. Using it could result in severe damage of the engine and motorcycle components. Using fuel with ethanol content over 10% will make the warranty null and void.

Fig 16

Attention

In case of indisposition caused by breathing fuel vapours for a long time, stay in the open air and contact your doctor. In case of contact with eyes, thoroughly flush with water; in case of contact with skin, immediately clean with water and soap.

Attention

Fuel is highly flammable, in case of accidental spillage of fuel on your clothes it is necessary to change into clean clothes.

Carrying the maximum load allowed

Your motorcycle is designed for long-distance riding, carrying the maximum load allowed in full safety. Even weight distribution is critical to preserving these safety features and avoiding trouble when performing sudden manoeuvres or riding on bumpy roads.

Attention

Do not exceed the total permitted weight for the motorcycle and pay attention to information provided below regarding load capacity.

Information about carrying capacity

Important

Arrange your luggage or heavy accessories in the lowest possible position and close to motorcycle centre.

Important

Never fix bulky or heavy objects to the handlebar or to the front mudguard as this would affect stability and cause danger.

Important

Be sure to secure the luggage to the supports provided on the motorcycle as firmly as possible. Improperly secured luggage may affect stability.

Important

Do not insert any objects you may need to carry into the gaps of the frame as these may foul moving parts.

Attention

Make sure the tyres are inflated to the proper pressure and that they are in good condition.

Refer to paragraph “Tyres” in the "Technical specifications" section.

Dangerous products - warnings

Used engine oil

Attention

Prolonged or repeated contact with used engine oil may cause skin cancer. If working with engine oil on a daily basis, we recommend washing your hands thoroughly with soap immediately afterwards. Keep away from children.

Brake dust

Never clean the brake assembly using compressed air or a dry brush.

Brake fluid

Attention

Spilling brake fluid onto plastic, rubber or painted parts of the motorcycle may cause damages. Protect these parts with a clean shop cloth before proceeding to service the system. Keep away from children.

Attention

The fluid used in the brake system is corrosive. In the event of accidental contact with eyes or skin, wash the affected area with abundant running water.

Coolant

Engine coolant contains ethylene glycol, which may ignite under particular conditions, producing invisible flames. Although the flames from burning ethylene glycol are not visible, they are still capable of causing severe burns.

Attention

Take care not to spill engine coolant on the exhaust system or engine parts.

These parts may be hot and ignite the coolant, which will subsequently burn with invisible flames.

Coolant (ethylene glycol) is irritant and poisonous when ingested. Keep away from children. Never remove the radiator cap when the engine is hot. The coolant is under pressure and will cause severe burns.
The cooling fan operates automatically: keep hands well clear and make sure your clothing does not snag on the fan.

Battery

Attention

The battery gives off explosive gases; never cause sparks or allow naked flames and cigarettes near the battery. When charging the battery, ensure that the working area is properly ventilated.

Vehicle identification number

Note

These numbers identify the motorcycle model and should always be indicated when ordering spare parts.

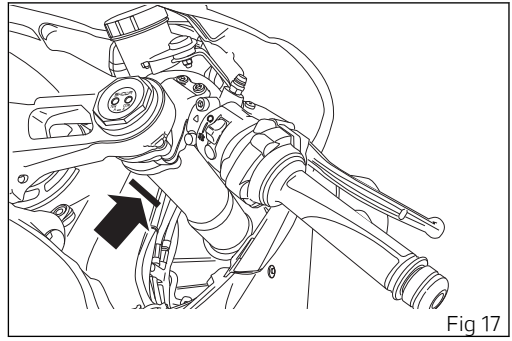

Fig 17

Engine identification number

Note

These numbers identify the motorcycle model and should always be indicated when ordering spare parts.

The engine identification number is located at the front of the motorcycle, specifically on the lower left side of the engine.

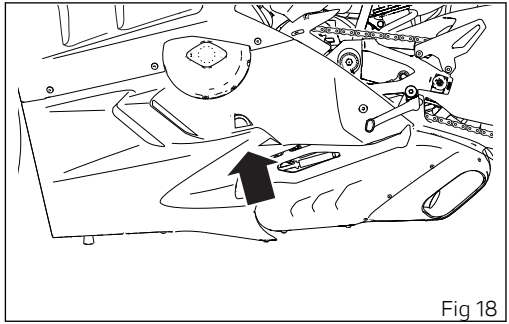

Fig 18

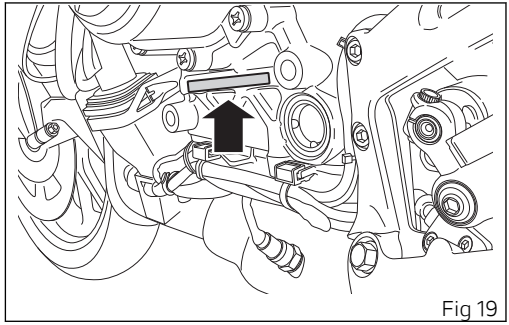

Fig 19

Main components and devices

Position on the vehicle

1) Tank filler plug.
2) Seat lock.
3) Side stand.
4) Rear-view mirrors.
5) Front fork adjusters.
6) Rear shock absorber adjusters.
7) Catalytic converter (both sides).
8) Exhaust silencer (both sides).

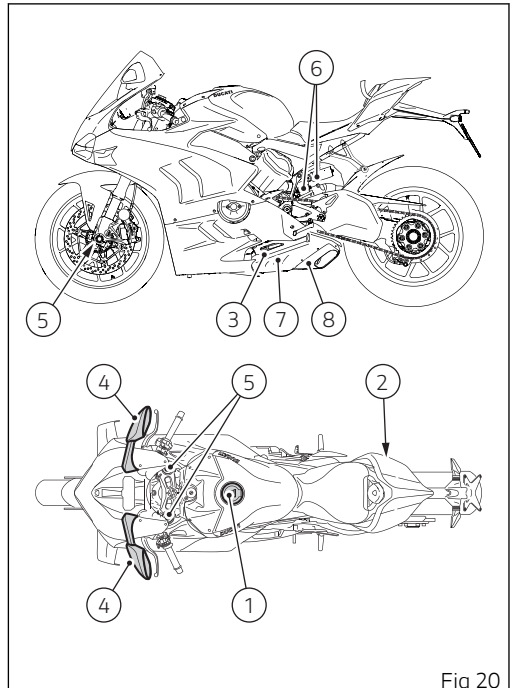

Fig 20

Tank filler plug

Opening

Lift flap (1) and insert the key in the lock. Turn the key clockwise by 1/4 of a turn to release the lock.
Lift the plug (2).

Closing

Close the plug (2) with the key inserted and push it down into its seat. Remove the key and close flap (1) protecting the lock.

Note
Plug can only be closed when key is inserted.

Attention
After refuelling, always make sure that the plug is perfectly in place and closed.

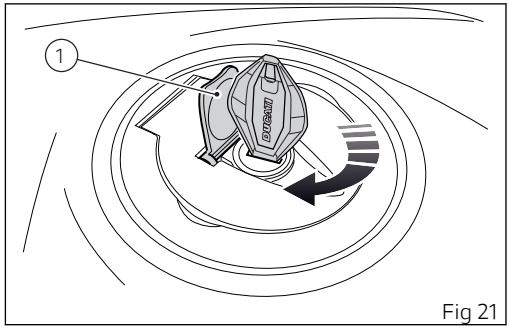

Fig 21

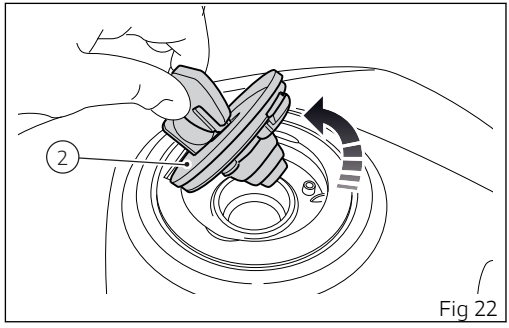

Fig 22

Seat lock

Opening

Insert the key into the seat lock (1) and turn it until the passenger seat (2) catch disengages with an audible click.
Pull the passenger seat (2) towards the front end of the motorcycle until releasing it.

Closing

Insert the passenger seat (2) from the side and push it towards the rear end of the motorcycle until fully home.

Attention
To close the seat cover insert it from the motorcycle side and slide it towards the rear side until hearing the engagement click.

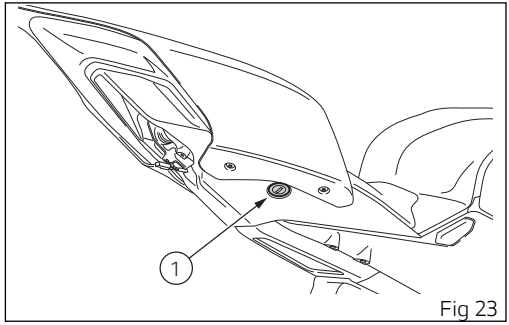

Fig 23

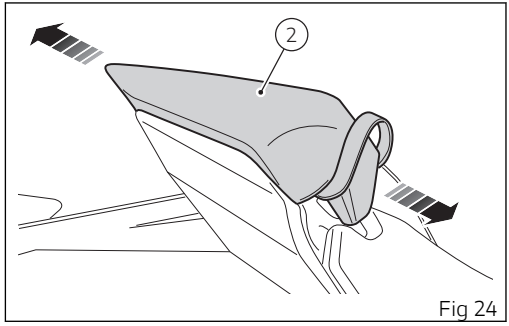

Fig 24

Before fitting the passenger seat (2), make sure that passenger strap (3) is correctly positioned.

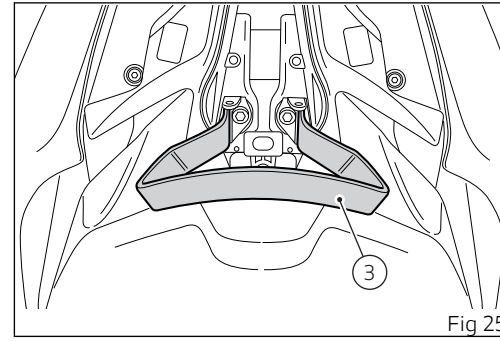

Fig 25

Maintaining the battery charge

Our motorcycle is provided with a connector (1) (diagnostic socket), located under the rider seat, on the left side, to which it is possible to connect a suitable battery charger (A) (Battery maintenance kit part no. 69928471A (Europe), part no. 69928471AW (Japan), 69928471AX (Australia), 69928471AY (UK), 69928471AZ (USA), available from our sales network).
To reach it, remove the two screws (3) on both sides and remove the rider seat (2).

Attention

The electric system of this motorcycle is designed so as to ensure there is a very low power drain when the motorcycle is OFF. Nevertheless, the battery features a certain self-discharge rate that is normal and depends on ambient conditions as well as on vehicle "non-use" time.

Important

If battery is not kept at a minimum charge level by a suitable battery charge maintainer, sulphation may occur and this is an irreversible phenomenon causing decreasing battery performance.

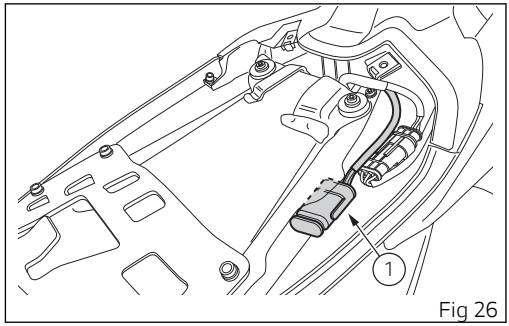

Fig 26

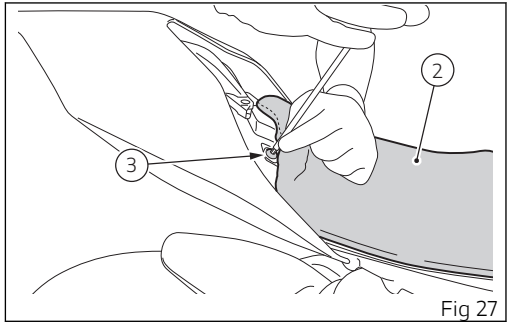

Fig 27

When the motorcycle is left unused (approximately for more than 30 days), we recommend owners to use the Ducati battery charge maintainer (Battery maintenance kit) which is provided with electronics that monitors the battery voltage and features a maximum charge current of 1.5 Ah.
Connect the battery maintainer to the diagnostic socket.

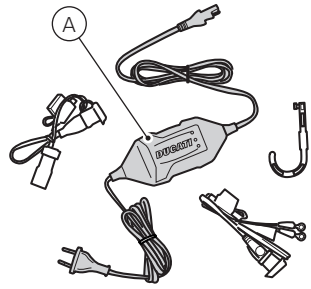

Fig 28

Note

Using charge maintainers not approved by Ducati could damage the electric system; motorcycle warranty does not cover the battery if damaged due to failure to comply with the above indications, since it is considered as wrong maintenance.

Side stand

Attention

The position of the side stand is identified on the instrument panel by the warning light. When the warning light is on, the side stand is lowered (and the engine start is inhibited).

Important

Place the motorcycle on the side stand only when you are not going to use it for short periods of time. Before lowering the side stand, make sure that the bearing surface is hard and flat.

Do not park on soft or pebbled ground or on asphalt melted by the sun, etc. or else the motorcycle may fall over. When parking downhill, always position the motorcycle with the rear wheel facing downhill.

To pull down the side stand, hold the motorcycle handlebar with both hands and push down on the side stand (1) with your foot until it is fully extended. Tilt the motorcycle until the side stand is resting on the ground.

To easily find the side stand during the opening phase, press on pin (3) with your foot.

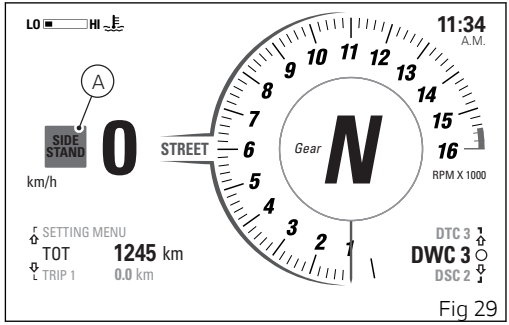

Fig 29

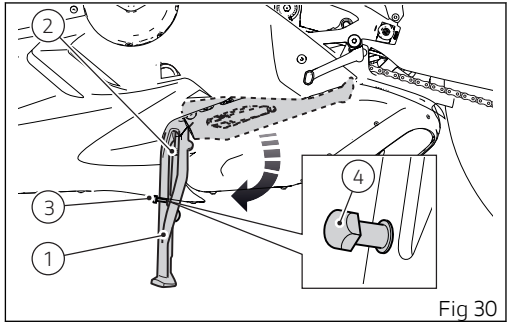

Fig 30

Attention

When using the bike on the track, we recommend removing the pin (3) by working on the key (4).

To move the side stand to its rest position (horizontal position), lean the motorcycle to the right while lifting the thrust arm (1) with your foot.
To ensure trouble-free operation of the side stand joint, thoroughly clean it and then use SHELL Alvania R3 grease to lubricate all friction points.

Attention

Do not sit on the motorcycle when it is supported on the side stand.

Note

Check for proper operation of the stand mechanism (two springs, one into the other) and the safety sensor (2) at regular intervals.

Bluetooth control unit

The motorcycle can be equipped with a Bluetooth control unit that works as a hub between the various supported electronic devices relying on a Bluetooth communication interface.
The Bluetooth control unit, which is not installed in this vehicle, can be purchased at a Ducati Dealer or Authorised Service Centre.

Attention

Smartphone and Bluetooth Headset device manufacturers may incorporate certain changes within the standard protocols over the course of the lifecycle of the device (Smartphones and Earphones).

Attention

These changes are outside the control of Ducati and may result in Bluetooth Headset devices functionality becoming impaired (sharing Music, multimedia player, etc.) and may equally affect some types of Smartphones (depending on supported Bluetooth profiles). This is why Ducati cannot guarantee multimedia player proper operation for:

- any earphones not coming with the "Ducati Kit part no. 981029498";
- any Smartphones not supporting the required Bluetooth profiles (even though paired to earphones coming with the "Ducati Kit part no. 981029498").

Attention

In case of interference or noise due to particular conditions of the external environment, the Ducati earphone kit part no. 981029498 also allows sharing the music being played directly from rider helmet to passenger helmet (for further details please refer to the manual of the earphones coming with the Ducati kit part no. 981029498).

Note
The Ducati kit part no. 981029498 can be purchased separately at a Ducati Dealer or Authorised Service Centre.

Check that your Smartphone supports the following profiles:

- MAP profile: for a correct display of SMS and MMS notifications;
- PBAP profile: for a correct display of the Smartphone contact list.

Attention
Ducati does not ensure a correct connection to the Ducati Multimedia System of Bluetooth navigators that are not provided in the following kits:

- Kit of Ducati Zumo satellite navigator 350
- Kit of Ducati Zumo satellite navigator 390
- Kit of Ducati Zumo satellite navigator 395

Note
The Ducati kits mentioned above can be purchased separately at a Ducati Dealer or Authorised Service Centre.

Steering damper

It is located before the handlebar and is secured to the steering head.
It provides stable and accurate steering, improving the motorcycle's handling response under any conditions.

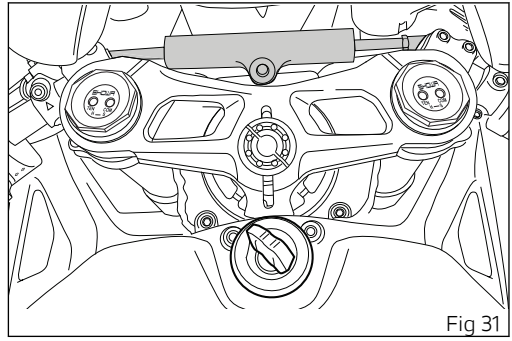

Fig 31

Front fork adjustment

The front fork used on this motorcycle has rebound (return), compression and spring preload adjustment.
Adjustment is done by external screw adjusters.

1) For rebound adjustment (1);
2) for compression adjustment (2);
3) for inner spring preload adjustment (3).

Position the motorcycle on its side stand so that it is stable.
Turn the adjuster (1) at the top end of each fork leg with a flat screwdriver to adjust rebound damping.
Turn the adjuster (2) at the top end of each fork leg with a flat screwdriver to adjust compression damping.

Turn the adjusting screws (1) and (2) to adjust the damping. The stiffest damping setting is obtained with the adjuster turned fully clockwise to the "0" position. Starting from this position, turning counter clockwise, you can count the turns.
To change preload of the spring inside each fork leg, turn the hex. adjuster (3), with a hexagon wrench, starting from the fully open (clockwise) position.

STANDARD settings

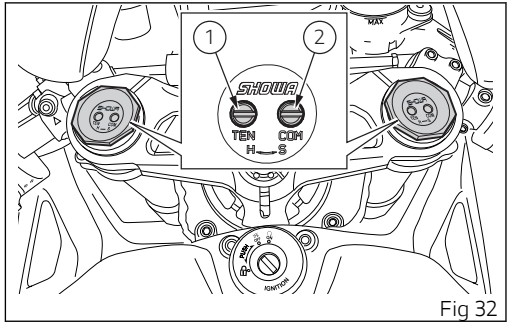

Fig 32

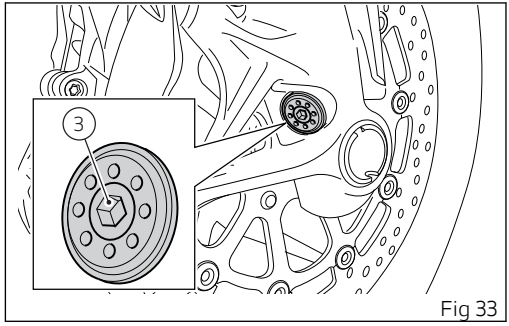

Fig 33

compression: Max – 6 turns (from fully closed);
rebound: Max – 4 turns (from fully closed);
spring preload: Min. 4 turns (from fully open).

Setting RANGE:
compression: Max 7 turns;
rebound: Max 5.5 turns;
spring preload: Max 15 turns.

Attention
Adjust both fork legs to same settings.

Adjusting the rear shock absorber

The rear shock absorber has adjusters that enable you to suit the setting to the load on the motorcycle.
Adjuster (1), located on the lower part of the monoshock, adjusts the damping during the rebound phase (return).
The adjuster (2) located on the expansion reservoir of the shock absorber adjusts the hydraulic compression damping.
The ring nuts (3) allow adjusting the shock absorber external spring preload.
To adjust the spring preload, loosen the top ring nut. Then TIGHTEN or SLACKEN the lower ring nut to INCREASE or DECREASE spring preload.
After setting spring preload as desired, tighten the upper locking ring nut.

STANDARD setting
rebound (1): 6 clicks from fully closed (clockwise);
compression (2): 1.5 turns from fully closed (clockwise);
spring preload: 13 mm (0.51 in) from fully uncompressed spring.

Maximum RANGE
rebound (1): 25 turns clicks from fully closed (clockwise);

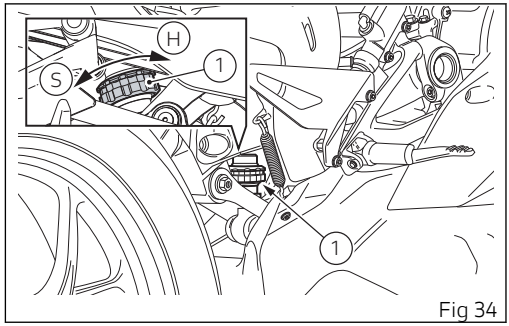

Fig 34

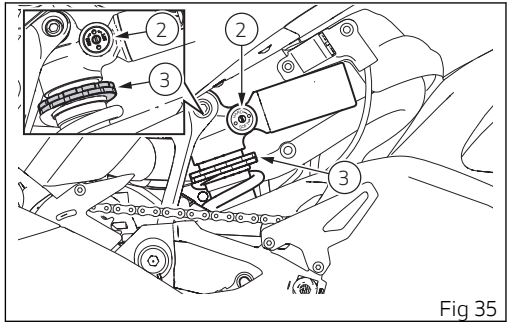

Fig 35

compression (2) (suggested for use on the track): 6.5 turns from fully closed (clockwise);
spring preload (3): 6 - 23 mm (0.24 - 0.90 in).

Attention

The shock absorber is filled with gas under pressure and may cause severe damage if taken apart by unskilled persons.

When carrying a passenger and luggage, set the rear shock absorber spring to proper preload to improve motorcycle handling and keep safe clearance from the ground. You may find that rebound damping needs adjusting as well.
Standard settings of the vehicle as delivered (factory settings specified in the previous paragraphs) correspond to a calibration which considers all use conditions (riding conditions, rider's skills and needs), and is the best solution for a sport use of the motorcycle on the road.

Setting the suspensions

Ducati recommends front and rear suspension settings as specified in the table: the indicated settings are mere suggestions since they depend on riding conditions as well as on the rider's skills and needs in terms of comfort.

Attention

The values in the table are indicative. They have been calculated considering a dressed rider weighing 80-90 kg (176.36-198.42 lb).

Important

The settings indicated in the table do not depend on the riding modes set by the rider on the instrument panel.

Front fork				
Parameter	**Range**	**Race A**	**Race B**	**Sport**
Rebound (from fully closed)	5.5 turns	2 turns	3 turns	6 turns
Compression (from fully closed)	7 turns	3 turns	4 turns	4 turns
Spring preload	15 turns	12 turns	10 turns	5 turns

Rear shock absorber				
Parameter	**Range**	**Race A**	**Race B**	**Sport**
Rebound (from fully closed — clockwise)	25 clicks	6 clicks	6 clicks	6 clicks
Compression (from fully closed — clockwise)	6.5 turns	1.5 turns	1.5 turns	1.5 turns
Spring preload (from completely uncompressed spring)	(6÷23) mm (0.24÷0.90 in)	15 mm (0.59 in)	13 mm (0.51 in)	13 mm (0.51 in)
Distance	312 mm (12.28 in)	312 mm (12.28 in)	312 mm (12.28 in)	312 mm (12.28 in)

Controls

Position of motorcycle controls

Attention

This section shows the position and function of the controls used to ride the motorcycle. Be sure to read this information carefully before you use the controls.

1) Instrument panel.
2) Key-operated ignition switch and steering lock.
3) Left-hand switch.
4) Clutch lever.
5) Right-hand switch.
6) Throttle handgrip.
7) Front brake lever.
8) Rear brake pedal.
9) Gear change pedal.

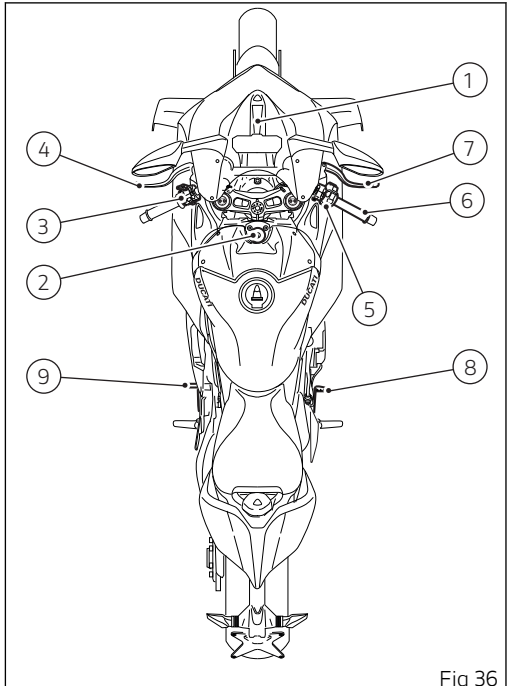

Fig 36

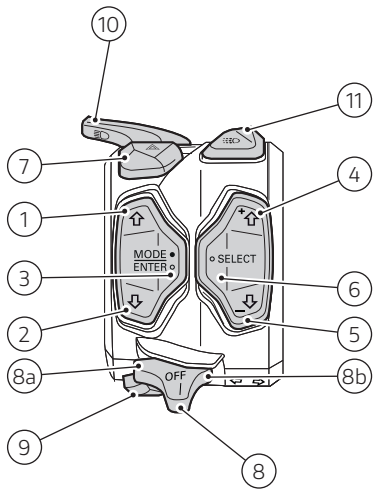

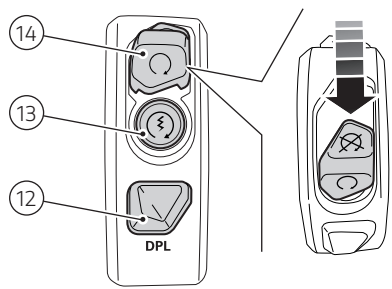

Fig 37

1	⇧	Control button up
2	⇩	Control button down
3	⇧	Button for Riding Mode change and ENTER function
4	+⇧	Control button up for parameter menu (see page 117)
5	○ SELECT	Selection button for parameter menu (see page 117)
6	-⇩	Control button down for parameter menu (see page 117)
7	⚠	Hazard lights (red)
8	⇦⇨ OFF	3-position turn indicator control: ● position (8a), left turn indicator ● centre position, OFF ● position (8b), right turn indicator
9		Warning horn
10		Light selector: ● high beam, pushed up ● low beam, at the centre ● high-beam flasher and “Start/Stop Lap” function, pushed down
11		DRL lights (if any)
12	DPL	DPL button
13		Engine start

14		Engine kill, pushed down (red)

Light control

Low / High beam

At Key-On, the high beam and low beam lights are off; only the parking lights are turned on.
When the engine is started the low beam is automatically switched on. It is possible to switch from low to high beam and vice versa with button (1), positions (A) and (B), or flash by pressing button (1) in position (C). If engine is not started after turning the key to on, it is nevertheless possible to switch on the lights or flash.
If within 60 seconds from the manual switching on of the low or high beam the engine is not started, the lights are turned off.

To preserve the motorcycle battery, if when starting the engine the high/low beams are on, the headlight is automatically switched off and then on again when the engine is started.

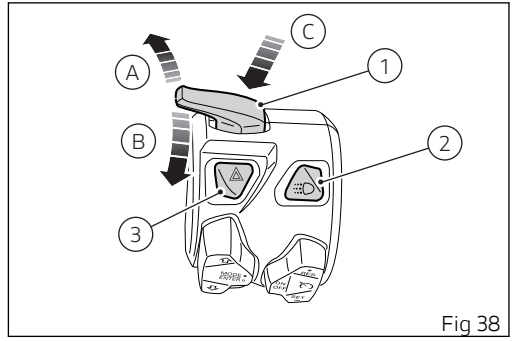

Fig 38

DRL in "Auto" mode – only for version with DRL lights

If “DRL” lights were set to “Auto” via the “DRL” function within the Setting Menu (see page 194), the instrument panel automatically manages the DRL and the low beam according to detected ambient light:

- if the instrument panel detects good light conditions (day) the DRL is turned on and the low beam is turned off;
- if the instrument panel detects poor light conditions (night) the DRL is turned off and the low beam is turned on.

When DRL lights are set to AUTO mode, the display shows the warning light (D).
If the DRL was set to "Auto" mode, press button (2, Fig 38) to disable that mode and set manual light management. Press again button (2, Fig 38) to re-enable DRL but with control strategy set to "Manual".
In this case, upon next Key-On, DRL will be again set to "Auto" mode.

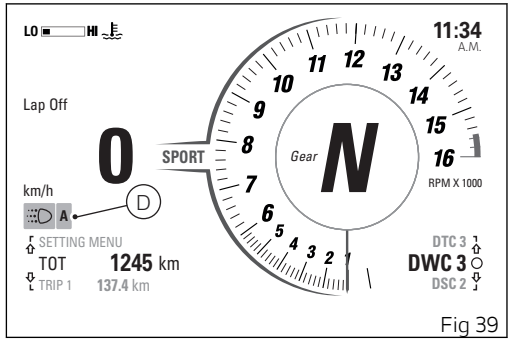

Fig 39

Attention
Using the DRL light in "Auto" mode in case of poor light conditions, especially in case of fog or clouds, could impair safety. In this case Ducati recommends to manually activate the low beam.

DRL in "Manual" mode – only for version with DRL lights

If the DRL lights are in this mode, as set through the "DRL" function within the SETTING MENU, DRL lights will not change their status upon key-on.
To switch on or off the DRL lights, it is necessary to press button (2, Fig 38).

Attention

Using the DRL lights in poor light conditions (dark) could compromise the riding visibility and dazzle anyone coming on the opposite lane.

Note

Using the DRL lights during the day improves visibility compared to low beam.

Turn indicators

Turn indicators are automatically reset by the instrument panel.
To activate the left turn indicator, press button (4) in position (E); to activate the right turn indicator, press button (4) in position (F).
Turn indicators can be cancelled by pressing button (4) on LH switch.

Automatic switch-off:
The turn indicators switch off automatically after the turn, as calculated based on vehicle speed, leaning angle and in general according to the analysis of vehicle dynamic conditions.
This means that automatic switch-off is triggered when vehicle speed exceeds 20 km/h (12.4 mph) after the turn indicator button was pressed.
Turn indicators also switch off automatically if they remained on for a long mileage, which can range between 200 and 2000 metres (656-6562 feet), depending on vehicle speed when the turn indicator button was pressed.
If the turn indicator switch is again operated, while turn indicator is still on, automatic switch-off feature is re-initialised.

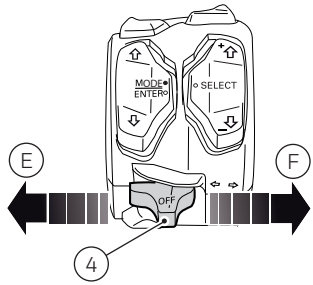

Fig 40

The automatic switch-off system can be disabled in the Setting menu.

Attention

The automatic deactivation systems are assist systems helping the rider control the turn indicators in the most comfortable and easy way. Such systems have been designed to work in most riding manoeuvres, nonetheless the rider must pay attention to the turn indicator operation (disabling or enabling them by hand if needed).

Hazard function (4 turn indicators)

The "Hazard" function turns all four turn indicators on at the same time to signal an emergency condition. Push the button to activate the “Hazard” function. It can only be activated when vehicle is turned on (Key-ON). When the "Hazard" function is active, all four turn indicators blink at the same time as well as warning lights on the instrument panel. The “Hazard” function can be manually turned off exclusively when vehicle is on (key-on), by pressing button (3).

Once the "Hazard" function is activated, if vehicle is turned off (key turned to "OFF"), the function stays active for 2 hours. After 2 hours, the turn indicators switch OFF automatically in order to save battery charge.

Note
If user performs a Key-ON while the "Hazard" function is still active, the function will remain ON (temporary turn indicator control interruption is allowed during the instrument panel initial check routine).

Note
If there is a sudden interruption in the battery while the function is active, the instrument panel will disable the function when the voltage is restored.

Note
The "Hazard" function has higher priority compared to normal operation of the single turn indicators, this means that, as long as it is active, it will not be possible to activate the single right or left turn indicators.

Parking lights

When turning the key to off, the display shows the page where to switch on the parking lights: to turn on the parking lights, keep pressed button (4, Fig 40) in position (E).

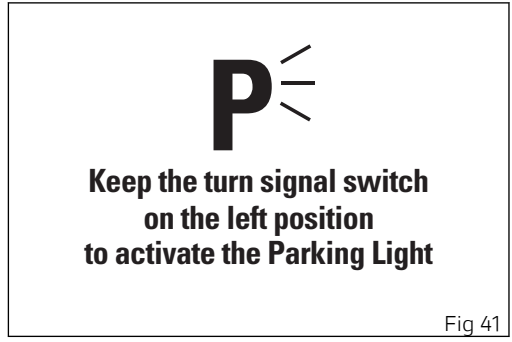

Fig 41

Ignition switch and steering lock

It is located in front of the fuel tank and has three positions:

A) ON: enables lights and engine operation;
B) OFF: disables lights and engine operation;
C) LOCK: the steering is locked;

Note

To move the key to the last position, press it down before turning it. The key can be removed in positions (B), (C) and (D).

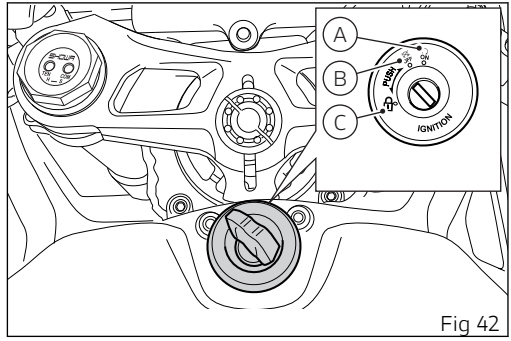

Fig 42

Keys

The motorcycle comes with 2 keys.
They contain the "Immobilizer system code".
Keys (B) are those for the standard use, i.e. to:

- start the engine;
- open the fuel tank plug;
- open the seat lock.

Attention

Separate the keys and use only one of the two to ride the bike.

Duplicate keys

When a customer needs spare keys, he/she shall contact a Ducati authorised service centre and bring all keys he/she still has.
The Ducati authorised service centre will program all new and old keys.
The Ducati authorised service centre may ask to the customer to prove to be the motorcycle owner.
The codes of the keys missing during the programming procedure will be erased to ensure that any lost key can not start the engine.

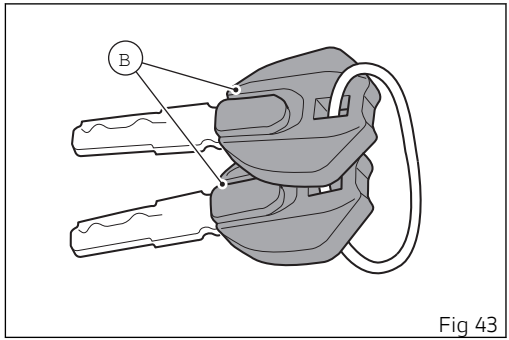

Fig 43

Note

If the motorcycle owner changes, it is necessary that the new owner is given all keys.

Immobilizer

To further improve the anti-theft protection, the motorcycle is equipped with an engine electronic block system (immobilizer) that is automatically activated every time the instrument panel is switched off.
Inside of each key handgrip there is an electronic device that modulates the signal sent by a special

antenna integrated in the ignition switch upon starting.
Such modulated signal represents the "password", that changes upon every starting, that allows the control unit to acknowledge the key and thus starting the engine.

Restoring motorcycle operation via the PIN code

In case of key acknowledgement system or key malfunction, the instrument panel allows the user to enter his/her own PIN code to temporarily restore motorcycle operation.
if the PIN CODE function is active, the instrument panel displays “Insert Pin” with four spaces allowing the rider to enter digits of the Pin code to be entered. “0” and “- - -".

Entering the code:

1) Each time you press the button (1) the displayed number increases by one (+ 1) up to "9" and then starts back from “0”;
2) Each time you press the button (2) the displayed number decreases by one (- 1) up to "1" and then starts back from "0";
3) To confirm the number, press the button (4).

Repeat the procedures until you confirm all the 4 digits of the PIN CODE.

When you press button (4) to confirm the fourth and last digit:

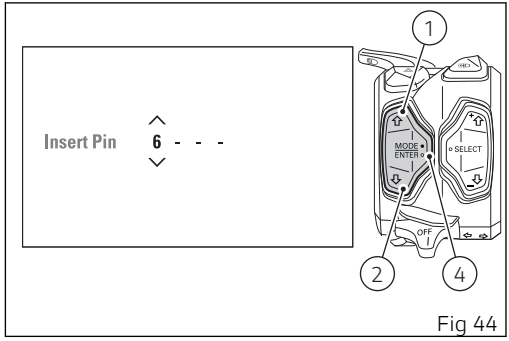

Fig 44

- if there is a problem during the PIN code check, the instrument panel displays “ERROR” for 2 seconds and then passes to the standard screen.
- if the PIN is not correct, the instrument panel displays WRONG for 2 seconds and then goes back to the “Insert Pin” indication with spaces to enter again the four digits of the Pin code.
- if the PIN CODE is correct, the instrument panel shows CORRECT for 2 seconds, and then displays the "standard screen".

Important

If this procedure is necessary in order to start the motorcycle, contact an Authorised Ducati Service Centre as soon as possible to fix the problem.

Clutch lever

Lever (1) disengages the clutch. It features a dial adjuster (2) for lever distance from the twistgrip on handlebar. The lever distance can be adjusted through 9 clicks of the dial (2) (maximum adjustment: 10 clicks). Turn clockwise to increase lever distance from the handgrip. Turn the adjuster anticlockwise to decrease lever distance. When the clutch lever (1) is operated, drive from the engine to the gearbox and the drive wheel is disengaged. Using the clutch properly is essential to smooth riding, especially when moving OFF.

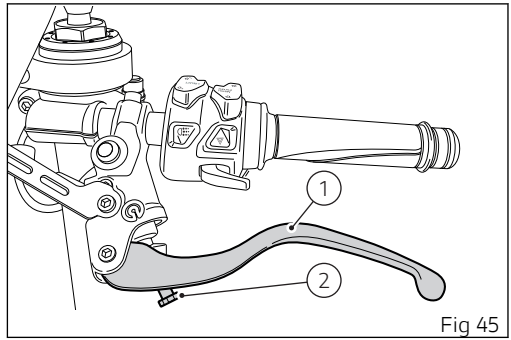

Fig 45

Attention

Set clutch lever when motorcycle is stopped.

Important

Using the clutch properly will avoid damage to transmission parts and spare the engine.

Note

The engine can be started with the side stand down and the gearbox in neutral. If starting with a gear engaged, pull in the clutch lever (in this case the side stand must be up before engaging the gear).

Throttle twistgrip

The twistgrip (1) on the right handlebar opens the throttles.
When released, it will spring back to the initial position (idling speed).

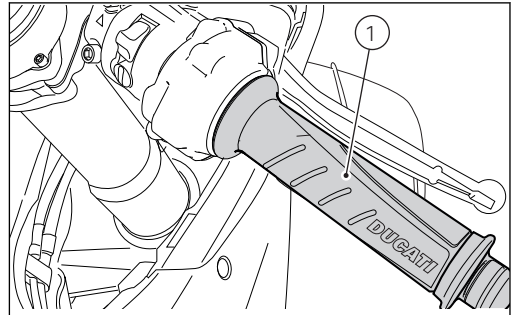

Fig 46

Front brake lever

Pull in the lever (1) towards the handgrip to operate the front brake. The system is hydraulically operated and you just need to pull the lever gently.
The control lever (1) has a dial (2) for adjusting the distance between lever and twistgrip on the handlebar.
The lever distance can be adjusted through 9 clicks of the dial (2).
Turn clockwise to increase lever distance from the twistgrip.
Turn the adjuster anticlockwise to decrease lever distance.

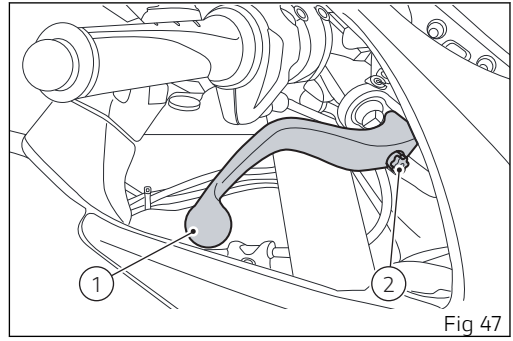

Fig 47

Rear brake pedal

Press pedal (1) down with your foot to operate the rear brake.
The control system is of the hydraulic type.

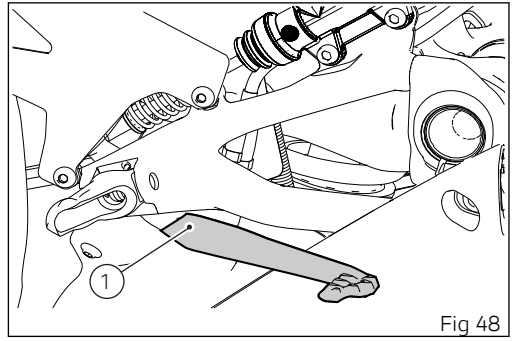

Fig 48

Gear change pedal

When released, the gear change pedal (1) automatically returns to rest position N in the centre. This is indicated by the instrument panel light N coming on.

The pedal can be moved:

- down = press down the pedal to engage the 1st gear and to shift down. The N light on the instrument panel will go out;
- upwards= lift the pedal to engage 2nd gear and then 3rd, 4th, 5th and 6th gears.

Each time you move the pedal you will engage the next gear.

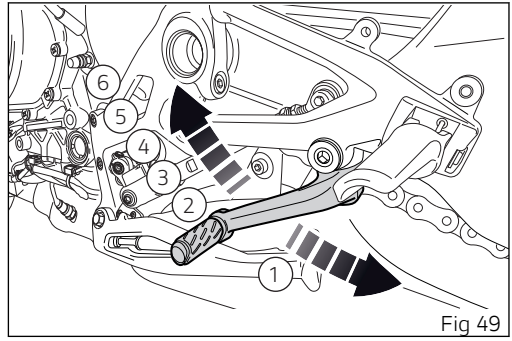

Fig 49

Adjusting the position of the gearchange pedal and rear brake pedal

Note

Gear change pedal position can also be adjusted with respect to the motorcycle: please contact a Dealer or Ducati authorised service centre to have this adjustment performed.

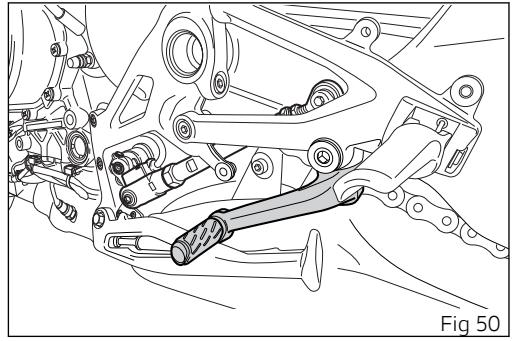

Fig 50

Riding the motorcycle

Motorcycle running-in period

During the running-in period, do not exceed the rpm indicated in the table below:

Maximum engine rpm not to be exceeded for the first period of use	
Up to 1,000 Km (621 mi)	7,000 rpm

Running-in recommendations:

- During the first few hours of riding, it is advisable to vary the load and engine speed continuously when the engine is warm, while remaining within the limit indicated in the table.
- During intensive use always shift down a gear to prevent the engine from overloading.
- Do not run the engine at high rpm for a long time, particularly when riding uphill; shifting up a gear reduces fuel consumption and noise.
- Avoid riding at constant speed, either slow or fast, for a long period of time.
- Do not ride at full throttle, especially when the engine is cold.
- Avoid starting at full throttle and rapid acceleration.
- Avoid abrupt and prolonged braking, act carefully on the brakes.
- Check the drive chain frequently. Lubricate as required.

Important

Before using the motorcycle, check for no labels on the rear-view mirrors; otherwise remove them.

Pre-ride checks

Attention

Failure to carry out these checks before riding, may lead to motorcycle damage and injury to rider.

Before riding, perform a thorough check-up on your motorcycle as follows:

- FUEL LEVEL IN THE TANK
  Check the fuel level in the tank. Refuel if necessary (see “Refuelling”).
- ENGINE OIL LEVEL
  Check the level in the sump through the sight glass; top-up if necessary (see “Checking the engine oil level”).
- BRAKE AND CLUTCH FLUID
  Check liquid level in the corresponding reservoirs (see "Checking brake and clutch fluid level").
- COOLANT
  Check the level of coolant in the expansion reservoir; top up if necessary (see "Checking and topping up the coolant level").
- TYRE CONDITION
  Check tyre pressure and condition (see “Tubeless tyres”).
- CONTROLS
  Work the brake, clutch, throttle and gear change controls (levers, pedals and twistgrip) and check for proper operation.
- LIGHTS AND INDICATORS
  Make sure lights, indicators and horn work properly. Replace any burnt-out bulbs (see “Replacing headlight light bulbs”).
- KEY LOCKS
  Check the tightening of the filler plug (see “Filler plug”).
- STAND
  Make sure side stand operates smoothly and is in the correct position (see “Side stand”).

Attention

In case of malfunction, do not ride the motorcycle and contact a Ducati Dealer or authorised Service Centre.

To ensure trouble-free operation, the engine coolant pump of your Panigale V4 requires a breather. This means that it is possible that a very small quantity of coolant oozes out of the breather hole positioned in the upper part of the crankcase, and this will not

affect proper operation of the engine or the cooling system.

ABS device

Check that the front (1) and rear (2) phonic wheels are clean.

Attention
Clogged reading slots would compromise system proper operation.

Attention
Prolonged wheelies could deactivate the ABS system.

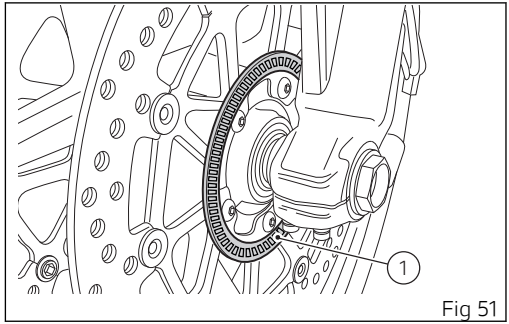

Fig 51

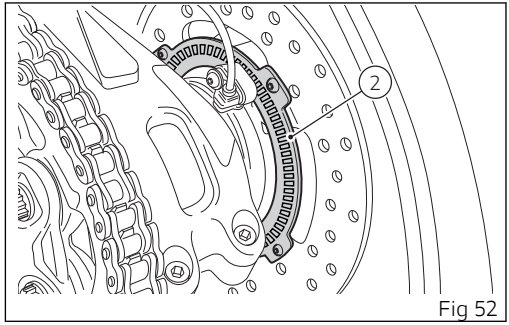

Fig 52

Engine start/stop

Attention

Before starting the engine, become familiar with the controls you will need to use when riding.

Attention

Never start or run the engine indoors. Exhaust gases are poisonous and may lead to loss of consciousness or even death within a short time.

Move the ignition key to ON. Make sure both the green light N (3) and the red light (4) on the instrument panel come on.

Important

The oil pressure light should go out a few seconds after the engine has started.

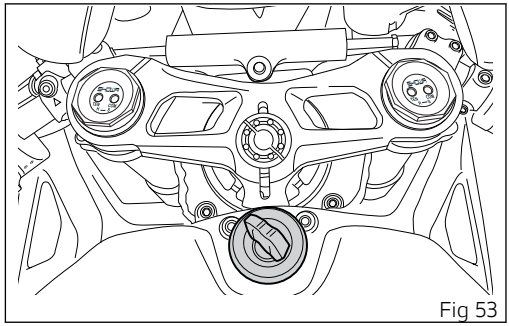

Fig 53

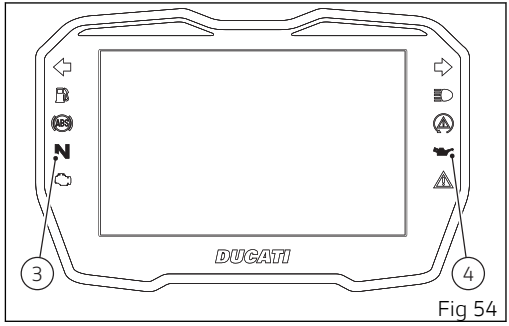

Fig 54

Attention

The side stand must be fully up (in a horizontal position) as its safety sensor prevents engine starting when down.

Note

It is possible to start the engine with side stand down and the gearbox in neutral. When starting the motorcycle with a gear engaged, pull the clutch lever (in this case the side stand must be up).

Move the red switch (1), on the right side of the handlebar upwards, and press button (2).
Let the motorcycle start without operating the throttle control.
The red oil pressure warning light (4, Fig 54) should go out a few seconds after the engine has started.

Note

If the battery is flat, system automatically inhibits starter motor cranking operation.

Important

Do not rev up the engine when it is cold. Allow some time for oil to be heated and reach all points that need lubricating.

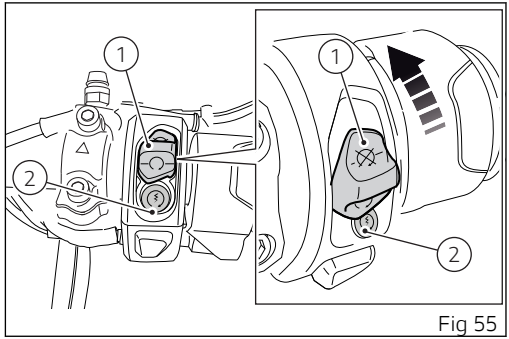

Fig 55

The engine will shut off by moving the red button (1) on the handlebar downwards to RUN OFF.

Attention

Keeping the engine running for too long with the vehicle stationary may cause damage due to overheating caused by insufficient cooling. Do not run the engine unnecessarily while the vehicle is stationary. Move immediately after starting the engine.

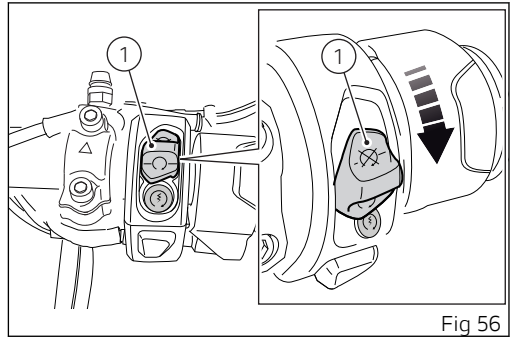

Fig 56

Moving off

1) Lift the side stand until it is horizontal.
2) Squeeze the control lever to disengage the clutch.
3) Push down on gear change lever sharply with the tip of your foot to engage the first gear.
4) Speed up the engine by turning the throttle twistgrip while gradually releasing the clutch lever; the motorcycle will start moving off.
5) Let go of clutch lever and speed up.
6) To shift up, close the throttle to slow down engine, disengage the clutch, lift the gear change lever and let go of clutch lever. To shift down, proceed as follows: release the twistgrip, pull the clutch lever, shortly speed up to help gears synchronise, shift down (engage next lower gear) and release the clutch.

The controls should be used correctly and timely: when riding uphill do not hesitate to shift down as soon as the motorcycle tends to slow down, so you will avoid stressing the engine and the motorcycle abnormally.

Attention

Avoid harsh acceleration, as this may lead to misfiring and transmission snatching. The clutch lever should not be held in longer than necessary after a gear is engaged, otherwise friction parts may overheat and wear out.

Attention

Prolonged wheelies could deactivate the ABS system.

The engine control unit disables the 2 rear bank cylinders when engine is idling and the throttle twistgrip is fully released. This disabling is only implemented when some conditions are verified and namely depending on the engine temperature, gear engaged and clutch lever position (that must be completely pulled unless gear is in Neutral). This strategy ensures advantages in terms of fuel economy and rider's comfort because of less heat.

Braking

Slow down in time, shift down to use engine brake and then brake by operating both front and rear brakes. Pull the clutch before the motorcycle stops to avoid engine from suddenly stalling.

Anti-Lock Braking System (ABS)

Using the brakes correctly under adverse conditions is the hardest – and yet the most critical - skill to master for a rider. Braking is one of the most difficult and dangerous moments when riding a two wheeled motorcycle: the possibility of falling or having an accident during this difficult moment is statistically higher than any other moment. A locked front wheel leads to loss of traction and stability, resulting in loss of control.

The Anti-Lock Brake System (ABS) has been developed to enable riders to use the motorcycle braking power to the fullest possible amount in emergency braking or under poor pavement or adverse weather conditions.

ABS uses hydraulics and electronics to limit pressure in the brake circuit when a special sensor mounted to the wheel informs the electronic control unit that the wheel is about to lock up.

This avoids wheel lockup and preserves traction. Pressure is raised back up immediately and the control unit keeps controlling the brake until the risk of a lockup disappears. Normally, the rider will perceive ABS operation as a harder feel or a pulsation of the brake lever and pedal.

The front and rear brakes use separate control systems, meaning that they operate independently. Likewise, the ABS is not an integral braking system and does not control both the front and rear brake at the same time.

Stopping the motorcycle

Reduce speed, shift down and release the throttle twistgrip. Shift down to engage first gear and then neutral.

Apply the brakes and bring the motorcycle to a complete stop.

To switch the engine off, simply turn the key to OFF.

Parking

Stop the motorcycle, then put it on the side stand. To prevent theft, turn the handlebar fully left and turn the ignition key to the LOCK position.

If you park in a garage or other indoor area, make sure that there is proper ventilation and that the motorcycle is not near a source of heat.

Important

Never leave the ignition key in the switch when you are leaving your motorcycle unattended.

Attention

The exhaust system might be hot, even after engine is switched OFF; pay particular attention not to touch the exhaust system with any body part and do not park the motorcycle next to inflammable material (wood, leaves etc.).

Attention

Engine, exhaust pipes and silencers stay hot long after the engine is switched off; pay particular attention not to touch the exhaust system with any body part and do not park the vehicle next to flammable material (wood, leaves etc.).
Do not cover the motorbike with the canvas, when the engine and exhaust system are hot, to avoid damaging it.

Attention

Using padlocks or other locks designed to prevent motorcycle motion, such as brake disc locks, rear sprocket locks, and so on is dangerous and may impair motorcycle operation and affect the safety of rider.

Refuelling

Never overfill the tank when refuelling. Fuel should never be touching the rim of filler recess.

Warning

The fuel pressure inside the tank may, in extreme cases, cause fuel to “spray” when opening the fuel cap.
Always open the fuel cap slowly and carefully during the refill.
If you hear an audible hiss from the cap while opening it, wait until the stop of the hissing before opening it completely.
The sound is residual pressure escaping from the fuel tank, therefore the stop of the hiss indicates that there is no more residual pressure.
The situation described above is more likely in hot weather conditions.

Attention

Use fuel with low lead content and an original octane number of at least 95.

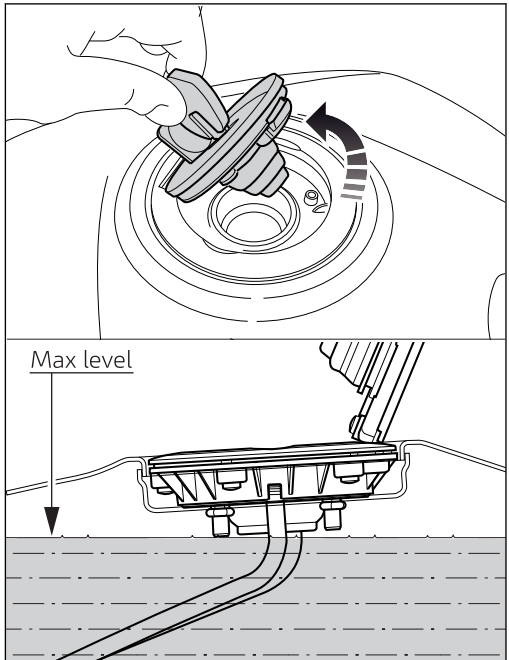

Fig 57

Attention

The motorcycle is only compatible with fuel having a maximum content of ethanol of 10% (E10). Using fuel with ethanol content over 10% is forbidden. Using it could result in severe damage of the engine and motorcycle components. Using fuel with ethanol content over 10% will make the warranty null and void.

Fuel label

The label identifies the fuel recommended for this vehicle.

1) The E5 reference inside the label indicates the use of fuel with a maximum oxygen content of 2.7% by weight and a maximum ethanol content of 5% by volume, according to EN 228.

2) The E10 reference inside the label indicates the use of fuel with a maximum oxygen content of 3.7% by weight and a maximum ethanol content of 10% by volume, according to EN 228.

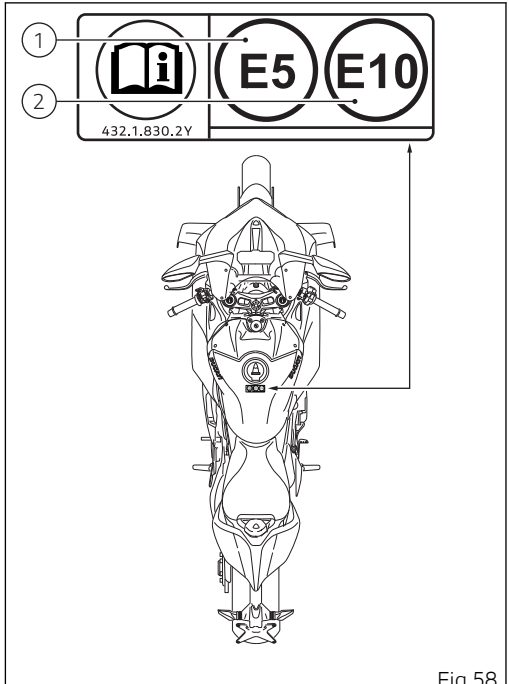

Fig 58

Tool kit and accessories

The glove compartment positioned under the passenger seat contains a 4 mm (0.16 in) L-shaped Allen wrench (1).

To access the compartment, remove the passenger seat (see “Seat lock”) and slide out the back (A) from the front.

Have the following parts (supplied as standard) installed by a Ducati Dealer or authorised Service Centre:
- passenger seat;
- right and left rear footpegs.

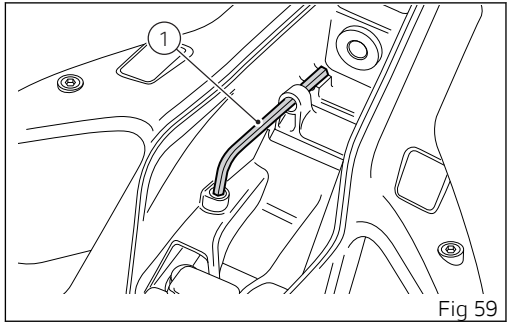

Fig 59

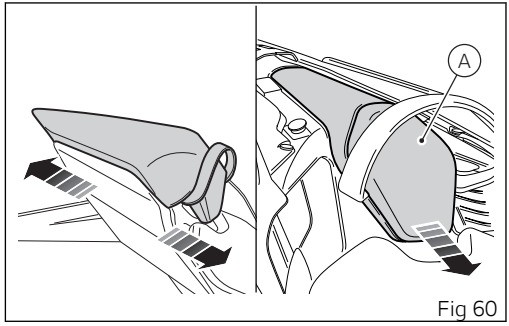

Fig 60

Instrument panel (Dashboard)

Instrument panel

The motorbike is equipped with an instrument panel featuring a TFT colour display.

The instrument panel provides all the information needed for safe driving and allows you to customise the vehicle settings and parameters.

Warning lights

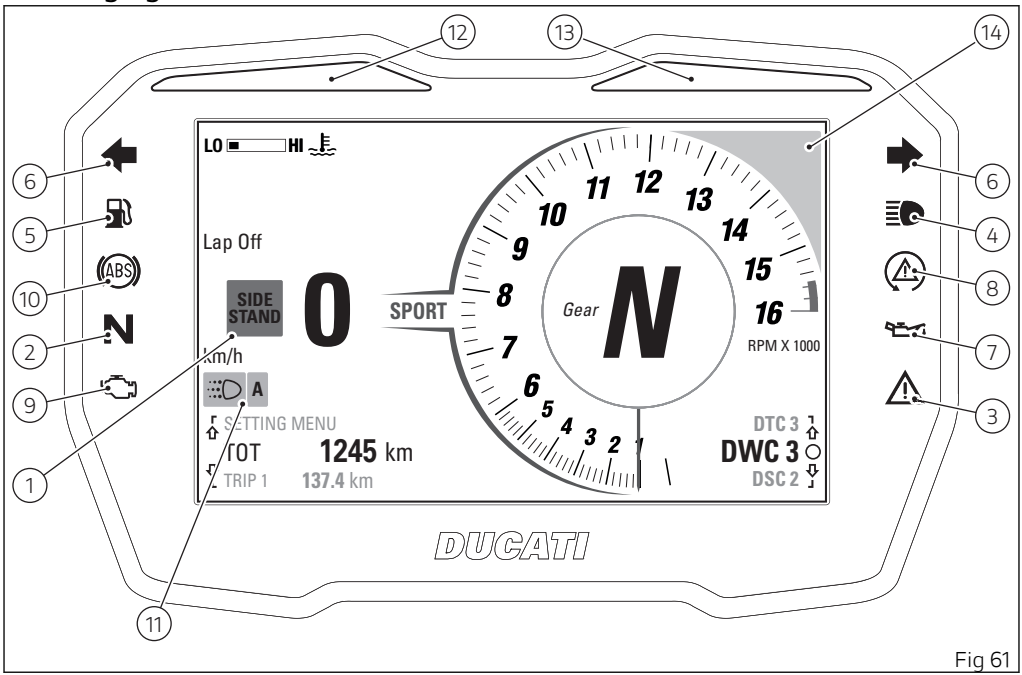

Fig 61

no.	Description	Colour
1	Side stand	Red (display)
2	Neutral gear	Green
3	Generic error	Amber yellow
4	High beam on	Blue
5	Low fuel	Amber yellow
6	Turn indicators	Green
7	Engine oil low pressure **Important** If the ENGINE OIL light stays ON, stop the engine or it may suffer severe damage.	Red
8	DAVC Diagnosis • flashing: DTC/DWC/DSC enabled, but with degraded performance; • on: DTC/DWC/DSC disabled and/or not functioning due to a fault in the control unit.	Amber yellow
9	MIL • The warning light turns steady on in case of error in engine management. Proceed slowly, avoid harsh acceleration and overtaking, take the vehicle to a Ducati authorised service centre to eliminate the malfunction. • The warning light turns on flashing to warn about a critical emission-related error that could damage the catalytic converter. If possible, have the vehicle be taken to a Ducati authorised service centre and the malfunc-	Amber yellow

no.	Description	Colour
	tion eliminated and at any rate proceed slowly, avoid harsh acceleration and overtaking.	
10	ABS Diagnosis ● flashing: ABS in self-diagnosis and/or functioning with degraded performance; ● on: ABS disabled and/or not functioning due to a fault in the ABS control unit.	Amber yellow
11	DRL – daytime riding lights on (not present in China and Canada versions)	Green (display)
12	Gear shift indication	Green
13	Limiter / Immobilizer	Red
14	DTC intervention	Amber yellow (display)

Important

If the display shows the message “TRANSPORT MODE”, immediately contact your Ducati Dealer that will delete this message and ensure the full operation of the motorcycle.

Upon key-on, the instrument panel displays the Ducati logo and carries out a sequential check of the LED warning lights.
After this routine, the instrument panel displays the main page in the mode in use before last Key-Off.

During this check stage, if the motorcycle speed exceeds 5 km/h (3 mph), the instrument panel will stop:

- the display check routine and display the standard screen containing updated information;

- the warning light check routine and leave ON only the warning lights that are actually active at the moment.

Display mode (Info Mode)

3 display modes (Info Mode) are available in the main screen: Track, Road and Track Evo.
The Info Modes are by default associated with the Riding Modes (see page 111) as follows:

1) Track for the Sport Riding Mode
2) Road for the Street Riding Mode
3) Track Evo for the Race A and Race B Riding Modes

The display mode for the current Riding Mode can be changed via the "Info Mode" function in the Setting Menu (see page 143).
It is furthermore possible to set the main screen background colour in the "Day" or "Night" mode by using the "Backlight" function in the Setting Menu (see page 191).
To change the displayed units of measurement, use the "Units" function in the Setting Menu (see page 208).

Track

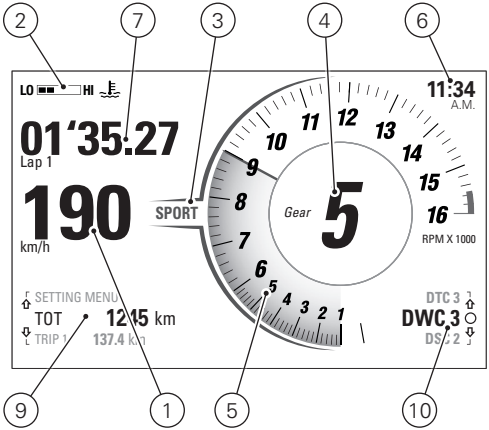

Road

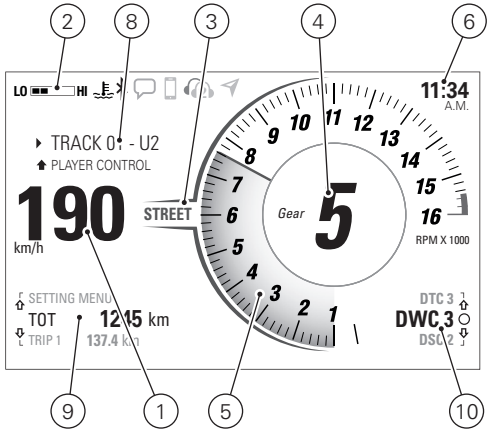

Fig 62

The table below lists the items available in the Track and Road Info Modes.

no.	Description
1	Speed It is displayed increased by 5% and together with the set unit of measurement (km/h or mph).
2	Engine Coolant temperature (°C or °F) The temperature display range goes from +40°C to +125°C (+104°F ÷ +257°F). When the temperature is higher than +125°C (+257°F), the graduated scale is replaced by the red flashing "HIGH" message. **Attention** In case of overheating, if possible, it is recommended to ride at reduced speed to allow the cooling system to lower the engine temperature. If this is not possible due to traffic conditions, stop and turn the engine off. If the motorcycle continues to be used when the engine is overheated, severe damage may occur. When the engine temperature returns to normal, continue riding by frequently checking the instrument panel indication.
3	Riding Mode in use (see page 111).
4	Gear.
5	Rev counter (see page 114).
6	Clock. This can be set using the "Date and Time" function in the Setting Menu (page 195).
7	Lap, only available in Track Info Mode (see page 128).

no.	Description
8	Infotainment system, only available in the Road Info Mode (if present, see page 105).
9	Function and trip info menu (see page 121).
10	Parameter menu and quick level change (see page 117).

Track Evo

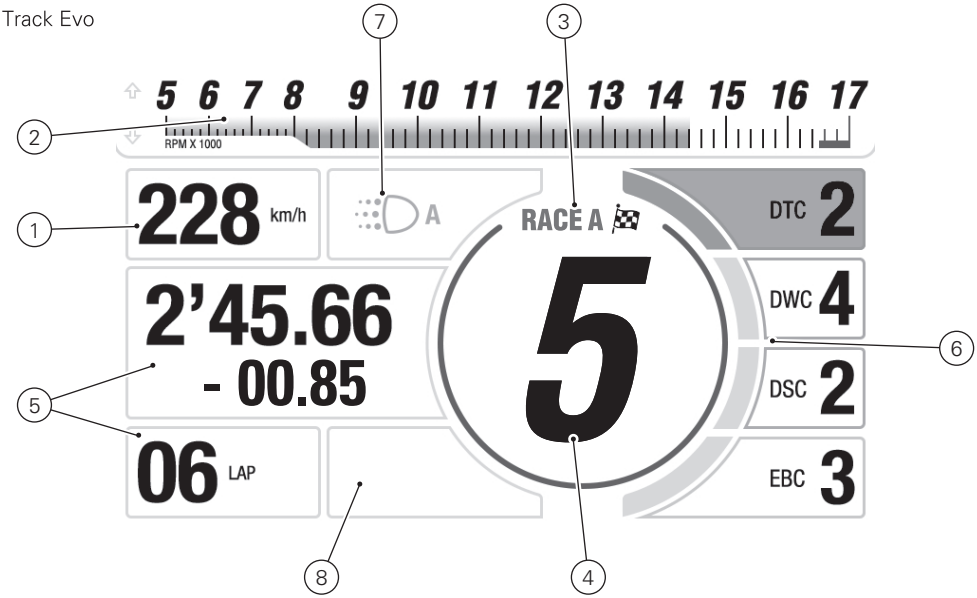

Fig 63

The table below lists the items available in the Track Evo Info Mode

no.	Description
1	Speed It is displayed increased by 5% and together with the set unit of measurement (km/h or mph).
2	Rev counter (see page 114) / Function and trip info menu (see page 121).
3	Riding Mode in use (see page 111).
4	Gear.
5	Lap (see page 128).
6	Parameter menu and quick level change (see page 117). The DTC, DWC, DSC, EBC boxes are coloured when the relevant system is intervening (e.g. DTC in the picture).
7	Auto DRL indication (not present in China, Canada versions) / Heated handgrip level indication (if present, see page 220).
8	Warning/error display area.

Riding Mode

4 Riding Modes are available: Sport, Street, Race A, Race B.
The name of the active Riding Mode is displayed in the central part of the display, between the speed value and the rev counter in Track and Road (A, Fig 64)Info Modes, or above the gear in Track Evo Info Mode (B, Fig 65)(see page 105).
Each Riding Mode is associated with a different colour for the name and rev counter box.

The parameters associated to each Riding Mode are: ENGINE, DTC, ABS, DWC, DSC, EBC, DQS, Info Mode.
For each Riding Mode it is possible to customise the parameters using the “Riding Mode” function in the Setting Menu (see page 137).

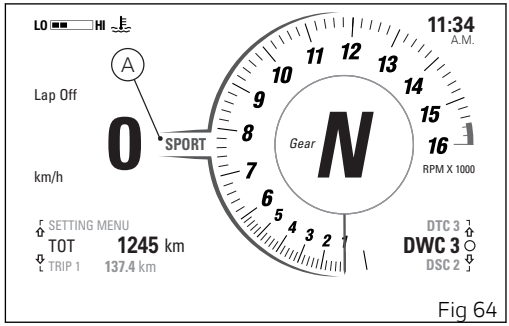

Fig 64

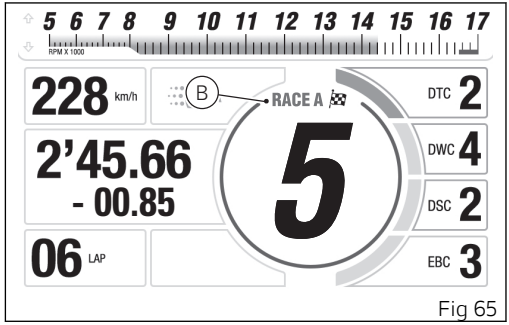

Fig 65

Change Riding Mode as follows:

- Press and hold the MODE/ENTER button (3) for a long time.
  System opens the page from which it is possible to scroll the available Riding Modes and view their parameters, together with the relevant settings.
- With buttons (1) and (2) it is possible to select the desired Riding Mode.
- Press the MODE/ENTER button (3) to confirm.

Select "Exit" and press the MODE/ENTER button (3) to quit the Riding Mode change function without making any changes.

As soon as the new Riding Mode is confirmed, the instrument panel checks the following conditions:

- If speed is lower than or equal to 5 km/h (3 mph) and throttle control is open, the message “Close throttle” is displayed; the new Riding Mode is confirmed and stored only when throttle control is closed and the main screen is displayed.
- If speed is lower than or equal to 5 km/h (3 mph), throttle control is closed but brakes are actuated, the message “Release brakes” is displayed; the new Riding Mode is confirmed and stored only when brakes are released and the main screen is displayed.
- If both the previously specified conditions are true, message “Close throttle and release brakes” is displayed; the new Riding Mode is confirmed and stored only when the 2 conditions are as required and the main screen is displayed.

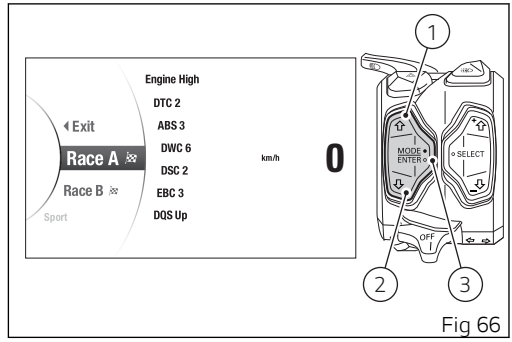

Fig 66

If either of the conditions required to validate the change of Riding Mode are not true within 5 seconds from activation of one of the above-described conditions, the procedure will be aborted, the

instrument panel will go back to displaying the main page and no settings will be changed.

Attention

Ducati recommends changing the Riding mode when the motorcycle is stopped. If the riding mode is changed while riding, be very careful (it is recommended to change the Riding mode at a low speed).

Engine rpm indication

The rev counter scale is displayed in mode (A) in Track Info Mode and is displayed in mode (B) in Road Info Mode. To set the Info Mode, see page 105.
The engine rpm is displayed using a rev counter featuring a coloured wake (C): grey in DAY mode and white in NIGHT mode
The red wake flashes when the limiter kicks in and the 15 Over-rev warning light turns on.
The gear shift is indicated by the switching-on of the relevant warning light (12, Fig 61).
If the number of rpm is lower than 1,000 RPM, the wake is not displayed.

During the first 1000 km (620 mi) of the odometer (vehicle break-in period), or up to the first service, a virtual engine rpm limiter is set.
After the break-in period or after the first inspection, the virtual limiter indicates and advises the rider to ride at lower revs when the engine is cold.
The virtual limiter threshold changes according to the engine temperature.
After the first inspection, the temperature thresholds become two:

- If the engine temperature is below 50° C (122° F), the rpm threshold is 8000 rpm

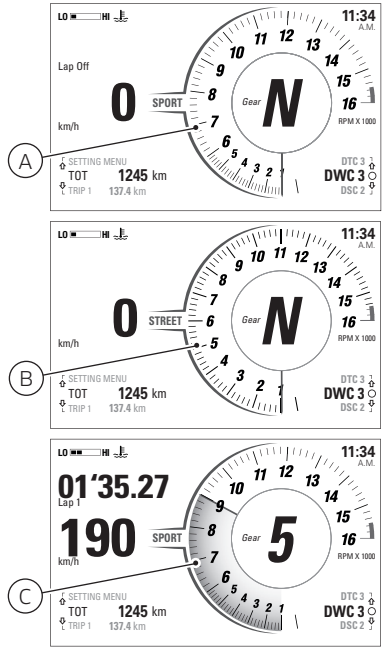

Fig 67

- If the engine temperature is within 50° C (122° F) and 60° C (140° F), the rpm threshold is 9000 rpm
- If the engine temperature is above 60° C (140° F), the rpm threshold is 10,000 rpm.

Engine rpm indication with Track Evo Info Mode

In Track Evo Info Mode, the rev counter scale (D) is displayed within the functions and trip info menu (see page 121).

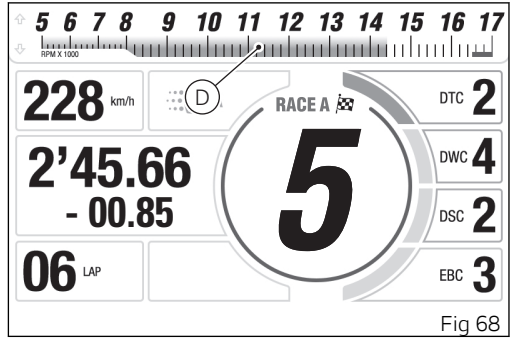

Fig 68

Parameter menu and quick level change

In the lower right corner of the main screen the parameter menu (A) that allows a quick level change for the selected parameter is displayed.
The following parameters and their currently set values are displayed in scrolling mode:

- DTC
- DWC
- DSC
- EBC

With the quick selection buttons UP (1) and DOWN (2) it is possible to scroll through the list of available parameters.
When the empty circle symbol at the right of the parameter is displayed, it is possible to change level by pressing the quick selection button “SELECT” (3).

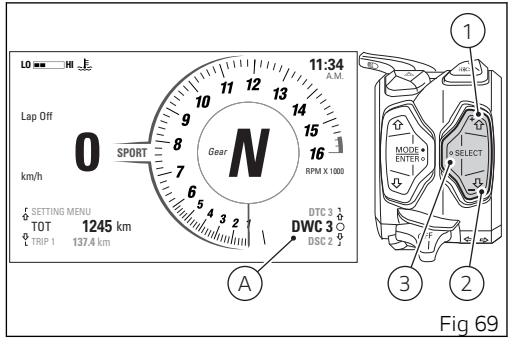

Fig 69

Oil change

Pressing the SELECT button (3) displays the selected parameter and its currently set level together with the available values.
The UP (1) and DOWN (2) navigation buttons can be used to scroll through and select the available levels. By pressing the SELECT button (3), you confirm the selected level and the instrument panel shows the previous screen.
The set level is memorised for the currently use Riding Mode.

For a correct choice of the levels for the parameters indicated and to customise the parameters for each available Riding Mode, refer to the "Riding Mode" function in the Setting Menu (see page 137) .

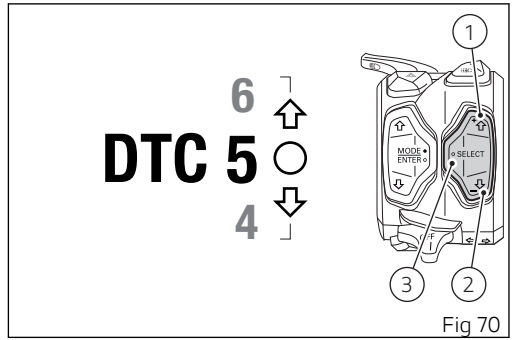

Fig 70

Note
If a parameter has been set to “off” through the Setting Menu (e.g. DTC, DWC, DSC), “off” status is displayed and it is not possible to perform its quick change.

Note
Through the quick change it is not possible to disable the parameter by setting an “off” level.

Parameter menu and level change with Track Evo Info Mode

If Track Evo Info Mode is active, the following parameters and their current settings are displayed on the right side of the screen:

- DTC
- DWC
- DSC
- EBC

The currently selected parameter is indicated by the colouring of the corresponding cursor (B, in the example “DTC”).
The UP (1) and DOWN (2) quick selection buttons can be used to move the parameter selection.
Press the quick selection button “SELECT” (3) to change level.
The window of the selected parameter (C, in the example “EBC”) is then enlarged, above and below the current level, 2 arrows are displayed indicating that by using the UP (1) and DOWN (2) buttons it is possible to scroll through the levels available for the parameter being modified.
By pressing the SELECT button (3) you confirm the selected level and the instrument panel shows the previous screen.

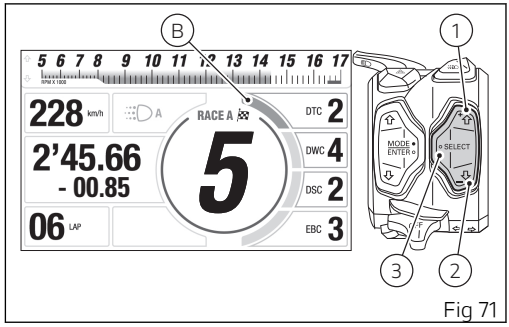

Fig 71

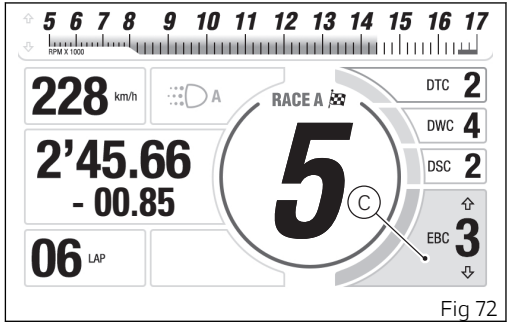

Fig 72

The set level is memorised for the currently use
Riding Mode.

Function and trip info menu

The "Functions and Trip Info" menu contains all the counters concerning the available trip information (A, in Track and Road Info Modes) (B, in Track Evo Info Mode).
You can scroll through the list of information using buttons (1) and (2).

The units of measurement of trip information can be changed using the "Units" function in the Setting Menu (see page 208).

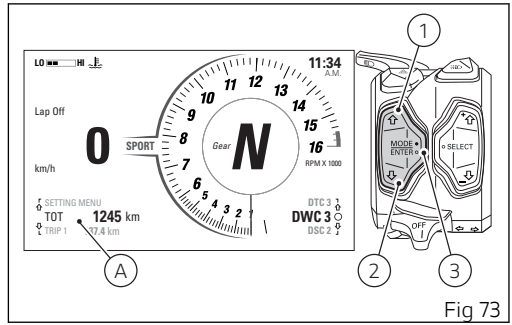

Fig 73

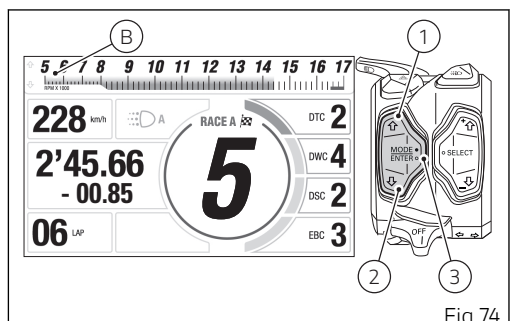

Fig 74

Below is a list of the functions and trip information in the menu for Track and Road Info Modes (A, Fig 73):

Name	Description	Measurement units / format
TOT	Total odometer	km, miles
TRIP 1	Partial mileage 1	km, miles
CONS. AVG 1	Average consumption 1	L/100, km/l, mpg UK, mpg US
SPEED AVG 1	Average speed 1	km/h, mph
TRIP 1 TIME	Travel time 1	hhh:mm
T AIR	Air temperature **Note** When the motorcycle is stopped, the engine heat could influence the displayed temperature.	°C, °F

Name	Description	Measurement units / format
TRIP FUEL	Residual range When the motorcycle is in a low fuel condition, this function is activated and automatically displayed in the menu, regardless of the item previously displayed. It is still possible to scroll through the other items present. **Note** When the bike is no longer in a low fuel condition, the “TOT” function is automatically displayed while the “TRIP FUEL” function is displayed.	km, miles
TRIP 2	Partial mileage 2	km, miles
CONS. I.	Instantaneous fuel consumption	L/100, km/l, mpg UK, mpg US
LAP OFF / ON	This function is visible only in the Track Info Mode and allows you to turn lap recording on or off (see page 128).	
PLAYER OFF / ON	This function is only visible in the Road Info Mode and is only present if the bike is equipped with a Bluetooth control unit and a smartphone is connected. It allows enabling or disabling the management of the music player (see page 32).	

Name	Description	Measurement units / format
LAST CALLS	This function is only visible in the Road Info Mode and is only present if the bike is equipped with a Bluetooth control unit and a smartphone is connected. It allows you to display the list of the last 7 calls that have been missed, made or received (see page 29).	
SETTING MENU	This menu allows enabling, disabling and setting some motorcycle functions (see page 137).	

Below is a list of the functions and trip information in the menu for Track Evo Info Mode (B, Fig 74):

Name	Description	Measurement units / format
TOT	Total odometer	km, miles
Rev counter	The engine rpm indication is displayed (see page 114)	
Engine Coolant temperature	Engine coolant temperature, indicated by bar graph. The temperature display range goes from +40°C to +125°C (+104°F ÷ +257°F). When the temperature is higher than +125°C (+257°F), the graduated scale is replaced by the red flashing "HIGH" message. **Attention** In case of overheating, if possible, it is recommended to ride at reduced speed to allow the cooling system to lower the engine temperature. If this is not possible due to traffic conditions, stop and turn the engine off. If the motorcycle continues to be used when the engine is overheated, severe damage may occur. When the engine temperature returns to normal, continue riding by frequently checking the instrument panel indication.	°C, °F

Name	Description	Measurement units / format
SETTING MENU	This menu allows enabling, disabling and setting some motorcycle functions (see page 137).	

Resetting trip information 1

Trip information “TRIP 1" (C, Fig 75), "CONS. AVG 1", "SPEED AVG 1" and "TRIP 1 TIME" can be reset by pressing the ENTER button (3) when selected: the message "RESET?" is displayed instead of the data. To cancel press button (1) or (2), to confirm press the ENTER button (3).
When the trip information 1 is reset, all counters referring to it are reset as well.

Resetting trip information 2

Trip information "TRIP 2" (D, Fig 76)can be reset by pressing ENTER (3) when selected: "RESET?" is displayed in place of the data.
To cancel press button (1) or (2), to confirm press the ENTER button (3).

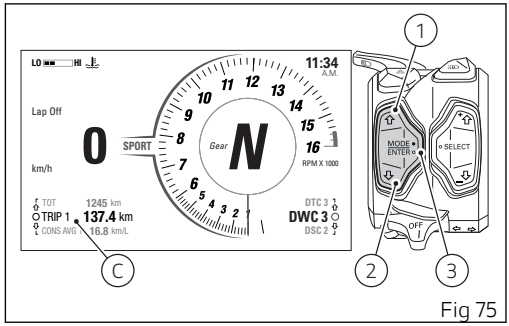

Fig 75

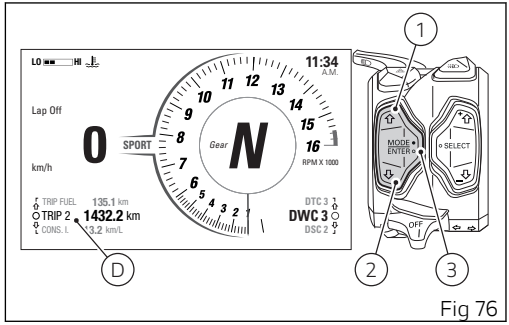

Fig 76

Lap

This function is present in the functions and trip info menu only in Track Info Mode and allows you to activate or deactivate the LAP time recording function.
To select this function in the menu, scroll the items available using buttons (1) and (2) to display “LAP” (A).

If the function is not active, the instrument panel displays “LAP OFF”. Press the ENTER button (3) to switch it on.
If the function is active, the instrument panel displays “LAP ON”. Press ENTER (3) to switch it off.

It is also possible to activate or deactivate lap recording by means of the "Lap" function in the Setting Menu (see page 187).

LAP time recording

According to whether the GPS is installed or not, the motorcycle can have two types of LAPs:

- LAP BASIC if the GPS is missing or not installed on the motorcycle in the basic version
- LAP EVO if the motorcycle is equipped with the GPS EVO

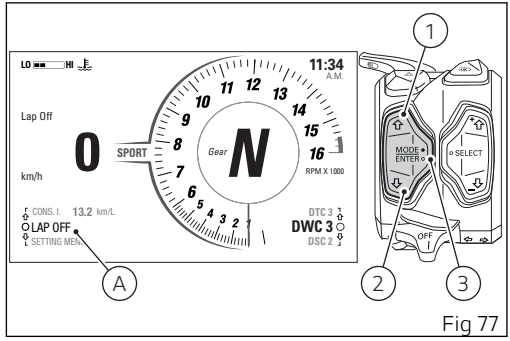

Fig 77

In both cases, upon the function activation the display shows:

- the timer at 0’00.00;
- the LAP number starting from “Lap --/60” in case of LAP BASIC;
- the current session number starting with “Session 1” and the LAP number starting with “Lap --/60”, in case of LAP EVO.

LAP BASIC without GPS module

Here are the screens for Track Info Mode (B, Fig 78)and Track Evo Info Mode (C, Fig 79).
If there is no GPS module on the motorcycle, timer can be started and stopped by pressing the FLASH button (4) after activating the function:

- when pressing the FLASH button (4) once, both timer (that starts) and lap number (which will become “Lap 01”) will flash for 1 second;
- when pressing the FLASH button some more times, the just recorded time and lap will flash for one second and remain displayed for another 5 seconds; after this period of time the function displays again the timer and lap progressive number.

For each lap, the following data are stored:

- Lap time;
- maximum reached speed;
- maximum reached rpm.

Note
It is possible to record maximum of 60 LAPs.

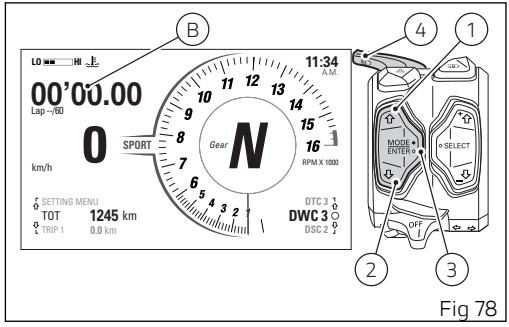

Fig 78

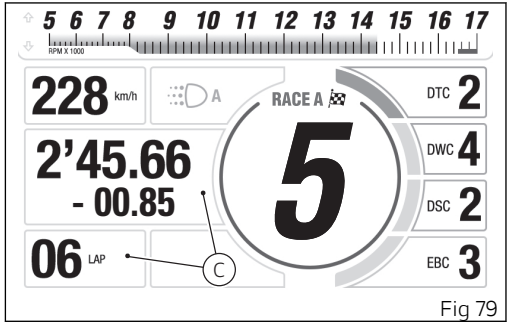

Fig 79

Note

The FLASH button (4) is not considered if pressed within 5 seconds from when a new lap is recorded.

LAP BASIC with GPS module

If there is a GPS module on the motorcycle, the timer start and stop is managed automatically by the instrument panel after activating the function.
Here are the screens for Track Info Mode (Fig 80) and Track Evo Info Mode (Fig 81).
The display shows GPS symbol (D) further to timer and lap number.

When lap one starts, press the FLASH button (4) to start the timer: both timer (that starts) and lap number (that will become “Lap 01”) will flash for 1 second. At the same time, the instrument panel stores finish-line position via the GPS control unit and activates the symbol (E): all the following laps will be directly recorded by the instrument panel and the FLASH button (4) is no longer used for the timer start/stop function.
Any time the bike reaches the finish-line position as recorded by the instrument panel, the just recorded time and lap will flash for one second and remain displayed for another 5 seconds; after this period of time the function displays again the timer and lap progressive number.

For each lap, the following data are stored:

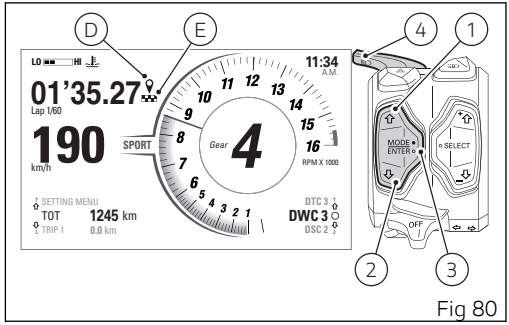

Fig 80

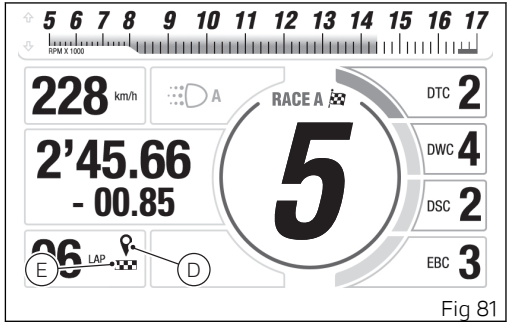

Fig 81

- Lap time;
- maximum reached speed;
- maximum reached rpm.

Note

It is possible to record maximum of 60 LAPs.

LAP EVO

If the bike is equipped with the GPS EVO module, the LAP EVO function is enabled. The display shows GPS symbol (D) further to timer and lap number.
Here are the screens for Track Info Mode (Fig 82) and Track Evo Info Mode (Fig 83).
Unlike the LAP BASIC, the LAP EVO allows recording the position of the finish-line and 2 intertimes. Once the finish-line and intertime coordinates are recorded, the LAPs are managed by the GPS.
To set the finish-line and the intertime coordinates it is necessary to:

- position the bike on the finish-line and press the FLASH button (4) to record the coordinates; the symbol (E) is displayed;
- position the bike on the first intertime and press the FLASH button (4) to record the coordinates; the symbol (F) is displayed;
- position the bike on the second intertime and press the FLASH button (4) to record the coordinates; the symbol (G) is displayed.

The set coordinates remain recorded also after a key-off.
To change the coordinates of one or more positions, repeat the recording procedure described above by

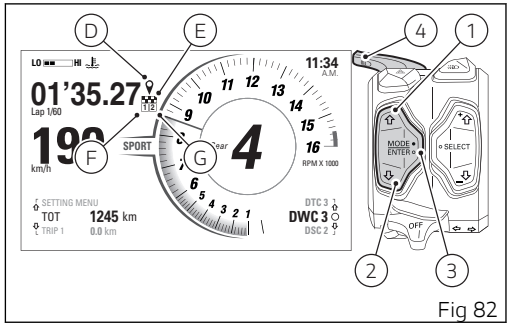

Fig 82

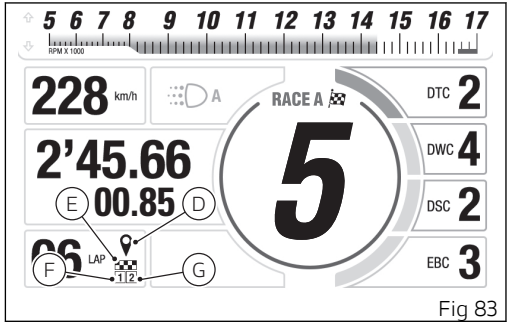

Fig 83

respecting the order: FINISH-LINE – INTERTIME 1 – INTERTIME 2.
The coordinates are deleted automatically when the instrument panel detects that the motorcycles moves by more than 15 km away from the memorised coordinates.

The LAP EVO allows recording maximum 60 LAPs that can be divided into up to 6 sessions
Upon each key-on, when the LAP function is activated, the instrument panel enables a new session.
Once session 6 is reached, in case of key-on the instrument panel continues the LAP recording in session 6.
When the 60th LAP is reached, the display will show "FULL".
To delete the recorded sessions and LAPs, refer to the "Lap" function in the Setting Menu (see page 187).
For each lap time, the LAP EVO function allows recording the following parameters:

- Lap time
- intertime 1
- intertime 2
- maximum reached speed detected through GPS EVO
- maximum reached rpm
- maximum reached lean angle
- maximum yaw angle

Delta time

In the Track Evo Info Mode, the “Delta time” (H) function appears below the timer, showing the comparison (positive or negative) of the recorded time with the previous LAP.
Every time a LAP is completed:

1) if the delta is negative, it means that the LAP just recorded is better and therefore the delta, the timer and the LAP number flash for 5 seconds;
2) if the delta is positive, it means that the LAP just recorded is not better and therefore the delta, the timer and the LAP number flash for 2 seconds and remain steady on for 3 seconds.

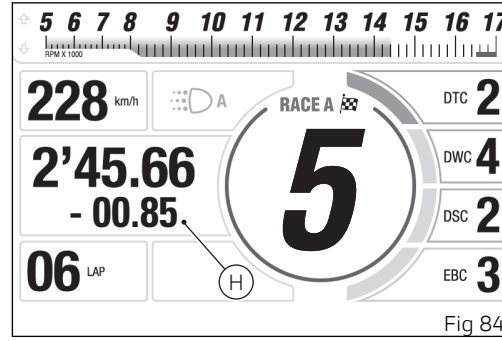

Fig 84

Note
The “Delta time” is not displayed during the recording of the first LAP.

The following notes are to be considered valid for all LAP types.

Note
If bike speed is equal to 0, after 5 seconds from lap time recording start, the instrument panel stops the time recording by resetting the timer.

Note
If during a time recording the motorcycle is stopped or the speed goes below 5 km/h (3 mph), the instrument panel stops the recording and resets the timer automatically.

Note
Any time you record a new lap time, if it is better than those previously memorised, the lap timer flashes quickly for 6 seconds, otherwise the timer flashes quickly only for 1 second. Best lap time is calculated only if at least 2 lap times have been recorded.

Note
Within RaceGP Info Mode, the time difference compared to previous lap is shown under the timer any time a new lap is recorded.

Note
If the LAP function is active, the instrument panel memorises the status upon the key-off. If the key is turned off during a Lap time recording, upon the next key-on the instrument panel stops and resets the timer.

Note
When the timer is started, if the time exceeds 07'59.99, it is reset and starts the count from 00'00.00.

Setting Menu

This menu allows enabling, disabling and setting some motorcycle functions.

For safety reasons, you can enter this Menu only when the actual vehicle speed is lower than or equal to 5 km/h (3 mph). If you are inside the Setting Menu and the actual vehicle speed exceeds 5 km/h (3 mph) the instrument panel automatically exits from the Setting Menu and displays the main screen.
It is recommended to use this menu with the motorcycle at a standstill.

To gain access to the Setting Menu, use buttons (1) and (2) to select "SETTING MENU" and press the ENTER button (3).

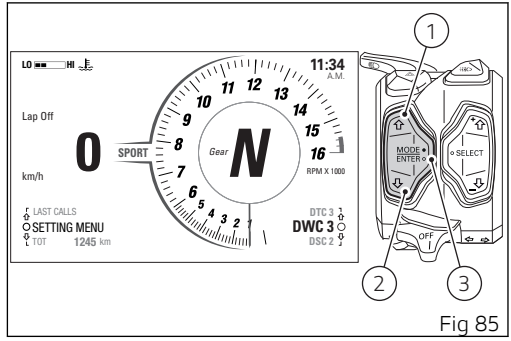

Fig 85

The following options will be displayed inside the Setting Menu:

- Service
- Riding Mode
- Pin Code
- Lap
- Backlight
- DRL (if present)
- Date and Time
- Tyre Calibration
- Bluetooth (see page 22)
- DDA (if present)
- Turn indicators
- Units
- Info

Note

When entering the Setting Menu, the first item selected is "Riding Mode".

When the Setting Menu is displayed, buttons (1), (2) and (3) can be used as follows:

- buttons (1) and (2) to scroll and select the available items;
- ENTER button (3) to confirm the selected item.

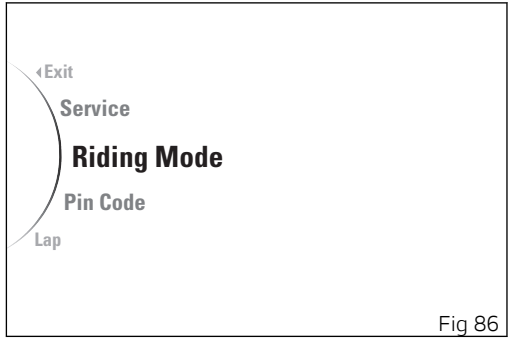

Fig 86

To exit the sub-menus of the Setting menu, select the "Back" item and press the ENTER button (3).
To exit the Setting menu and return to the main screen, select the "Exit" item and press the ENTER button (3).

Setting Menu - Service

This function allows displaying service coupons.

Note

When entering the Setting Menu, the first item selected is "Riding Mode".

- Enter the Setting menu.
- Use buttons (1) and (2) to select item “Service” and press the ENTER button (3).

The following information will be displayed:

- Odometer
- Vehicle identification number
- Oil Service (remaining kilometres or miles)
- Annual Service (date)
- Desmo Service (remaining kilometres or miles)

This function does not allow any kind of changes. Press the ENTER button (3) to quit.

When a service is due, it is highlighted in colour.

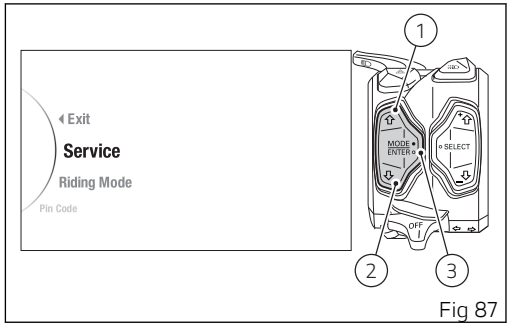

Fig 87

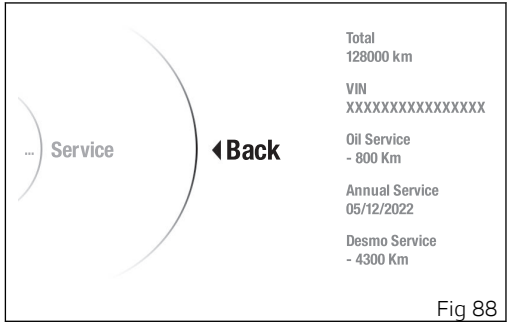

Fig 88

Service warnings

This indication shows the user that the motorcycle is due for service and must be taken to a Ducati Authorised Service Centre.
The service warning indication can be reset only by the Ducati Authorised Service Centre during servicing.
Service coupon types are: “Oil Service”, “Desmo Service” and “Annual Service”.
Within the scheduled maintenance chart, they are indicated as “Oil service”, “Valve check” and “Annual service”, respectively.

The warnings of the service intervals are displayed in 2 modes: large (A) and small (B) in the Track and Road Info Modes, in the box (C) in the Track Evo Info Mode.

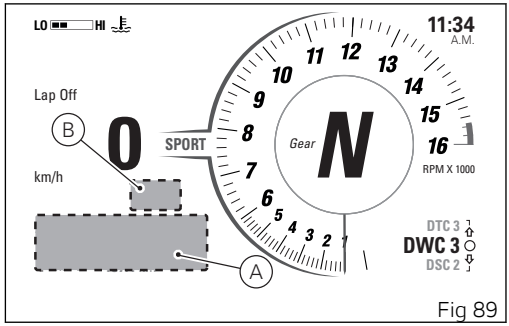

Fig 89

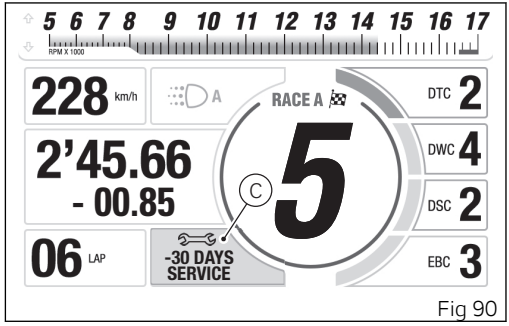

Fig 90

As the set service thresholds are almost reached, every time the motorcycle is switched on, the instrument panel activates the relevant grey indications for 5 seconds, in large mode (A, Fig 89)in the Track and Road Info Modes, showing the distance or days remaining: for “Oil Service” (D) and “Desmo Service” (E) it activates when 1000 km (621 miles) remain, for “Annual Service” (F) when 30 days remain.

Once the service threshold has been reached and each time the instrument panel is turned on, the corresponding amber warning is activated. In Track and Road Info Modes for the first 5 seconds it is displayed in large mode (A, Fig 89), then it is displayed in small mode (B, Fig 89).
Amber yellow service warning is displayed until reset by the Ducati authorised service centre, during maintenance.

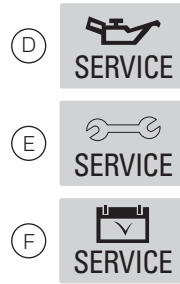

Fig 91

Digital Maintenance

At the pre-set deadlines, it will be necessary to contact your Dealer who will carry out the maintenance scheduled for the deadline indicated on the instrument panel.
Using the dedicated diagnosis instrument, the Dealer will confirm that the service has been performed and postpone the next due deadlines.
The history of routine maintenance is saved on Ducati's servers in order to certify that it has been carried out (it is a digital maintenance booklet).
The bike owner is able to see the performed services both in the MyGarage reserved area (on Ducati.com website) and in the MyDucati App.

Setting Menu - Riding Mode

This function allows customising each Riding Mode.

- Enter the Setting menu.
- Use buttons (1) and (2) to select item “Riding Mode” and press the ENTER button (3).

The "Race A", "Race B", "Sport", "Street" Riding Modes and the item "All Default" are displayed (visible only if one or more Riding Mode parameters have been changed). The active Riding Mode (Fig 93) is displayed on the right side.

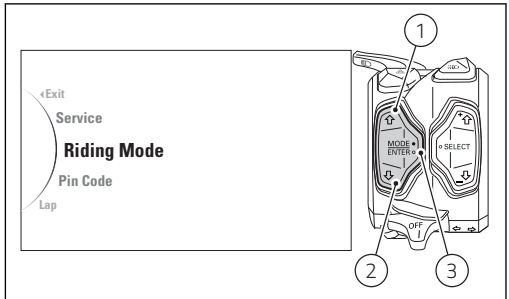

Fig 92

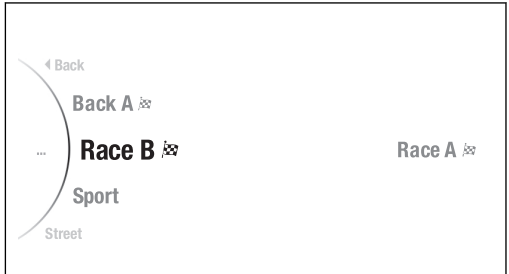

Fig 93

Use buttons (1) and (2) to select the Riding mode you wish to customise and press the ENTER button (3). The customisable parameters are the following:

- Engine
- ABS
- DAVC (DTC, DWC, DSC)
- EBC
- DQS (visible only if DQS system is present)
- Info Mode
- Default (visible only if one or more parameters are different from the default ones)

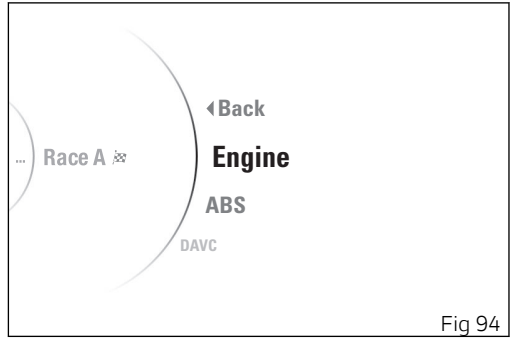

Fig 94

Attention

Changes should only be made to the parameters by people who are experts in motorcycle set-up. If the parameters are changed accidentally, use the "Default" function to restore factory settings.

To exit the menu and return to the previous screen, select the “Back” item and press the ENTER button (3).

Setting Menu - Riding Mode - Engine

This function allows setting the engine power.

- Enter the Setting menu.
- Use buttons (1) and (2) to select item “Riding Mode” and press the ENTER button (3).
- Select the Riding Mode you wish to customise and press ENTER (3).
- Select the “Engine” item and press ENTER (3).

The “Full”, “High”, “Medium”, “Low” levels are displayed on the left side. While the currently set level is shown on the right. The motorbike is shown in the middle with the part involved in the setting highlighted and the reference indications.
Use buttons (1) and (2) to scroll and select the desired level. Press the ENTER button (3) to confirm.
To exit the menu and return to the previous screen, select the “Back” item and press the ENTER button (3).

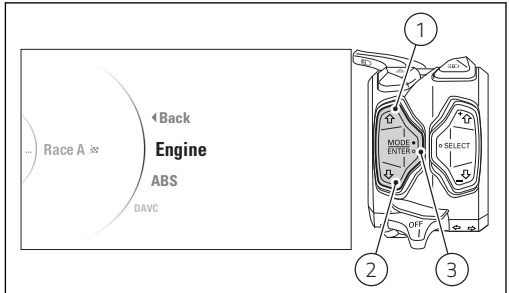

Fig 95

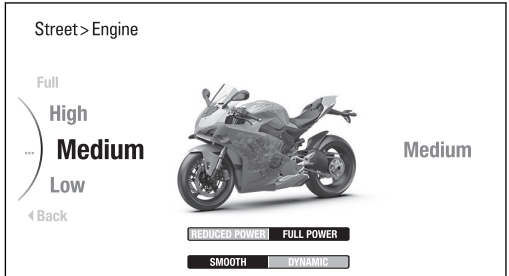

Fig 96

Setting Menu - Riding Mode - ABS

This function allows setting the ABS intervention level.

- Enter the Setting menu.
- Use buttons (1) and (2) to select item “Riding Mode” and press the ENTER button (3).
- Select the Riding Mode you wish to customise and press ENTER (3).
- Select the “ABS” item and press ENTER (3).

Levels from 1 to 3 are displayed on the left-hand side. While the currently set level is shown on the right. The motorbike is shown in the middle with the part involved in the setting highlighted and the reference indications.
Use buttons (1) and (2) to scroll and select the desired level. Press the ENTER button (3) to confirm.
To exit the menu and return to the previous screen, select the “Back” item and press the ENTER button (3).

Attention

In case of system malfunction, contact a Ducati Dealer or Authorised Service Centre.

Using the brakes correctly under adverse conditions is the hardest – and yet the most critical - skill to

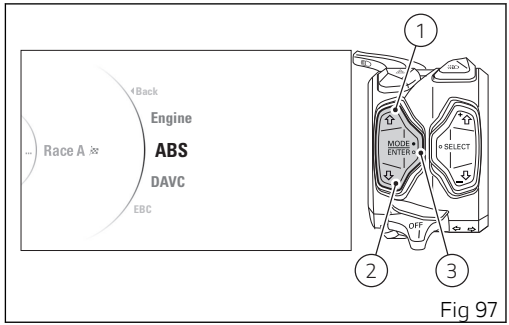

Fig 97

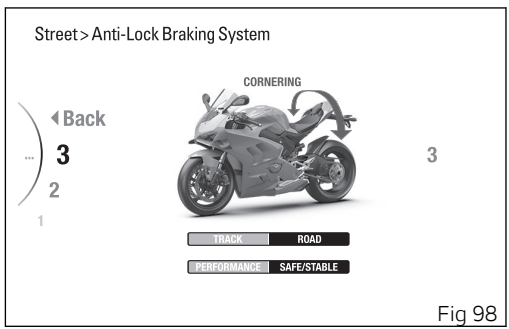

Fig 98

master for a rider. Braking is one of the most difficult and dangerous moments when riding a two wheeled motorcycle: the possibility of falling or having an accident during this difficult moment is statistically higher than any other moment. When one or both wheels lock, the stabilising action of traction fails, resulting in loss of control of the vehicle.

The Anti-Lock Braking System (ABS) has been developed to enable riders to use the motorcycle braking force to the fullest possible amount in emergency braking or under poor pavement or adverse weather conditions. ABS is an electro-hydraulic device that controls the pressure in the brake circuit when the control unit, by processing information from wheel sensors, determines that one or both wheels are about to lock up. This avoids wheel lockup and preserves traction within the limits of the system.
After that, the control unit restores the pressure in the brake circuit, to resume the braking action. This cycle is repeated many times until the problem is completely eliminated. Normally, the rider will perceive ABS operation as a harder feel or a pulsation of the brake lever and pedal. The front and rear brakes use separate control systems.

The ABS features 3 levels, one associated to each Riding Mode. The active presence of strategies and their intervention level depend on the selected level.

The Panigale V4 ABS features a "cornering" function that optimises ABS functionality to the conditions where the motorcycle is leaning over, thus preventing wheel lockup and slipping as much as possible, within the physical limits allowed by the vehicle and by the road conditions. The cornering function is active on all the ABS levels.
According to the selected level, the Panigale V4 ABS can implement the anti lift-up function for the rear wheel so as to guarantee not only a reduced stopping distance under braking, but also the highest possible stability.

In ABS level 1, associated by default to RACE Riding Mode, the system only works on the front discs to ensure top performance for track use. Also in this mode the cornering function is active: its level of intervention is described below.

In ABS level 2, associated by default to SPORT Riding Mode, also the slide control under braking is active. Under some activation conditions, ensuring in any case the maximum rider safety, the ABS

system allows more pronounced slipping at the rear allowing vehicle yaw or slide, so as to permit a more sporty and faster corner entry. This control activates when the user acts on the rear brake during a sufficiently strong braking also at the front. During the operation of this system, the ABS monitors vehicle slipping or slide level, so that it remains below a safety level, which depends on the lean angle. If vehicle slipping or slide level increases too much, the ABS operates again in standard mode, realigning the vehicle in order to always ensure the maximum safety.

In ABS level 3, associated by default to STREET Riding Mode, besides the cornering function, also the lift-up control is active. This control prevents rear wheel lift-up, thus allowing the vehicle to keep a good alignment during the whole braking action.

Attention

Using the two brake controls separately reduces the motorcycle braking power. Never use the brake controls harshly or suddenly as you may cause rear wheel lift-up and lose control of the motorcycle. When riding in the rain or on slippery surfaces, braking will become less effective. Always use the brakes very gently and carefully when riding under these conditions. Any sudden manoeuvres may lead to loss of control. When tackling long, high-gradient downhill road tracts, shift down gears to use engine braking. Apply one brake at a time and use brakes sparingly. Keeping the brakes applied all the time would cause the friction material to overheat and reduce braking power dangerously. Underinflated and overinflated tyres reduce braking efficiency, handling accuracy and stability in a bend.

The following table indicates the most suitable level of ABS intervention for the various riding types as well as the default settings in the "Riding Mode" that can be selected by the rider:

ABS	RIDING MODE	CHARACTERISTIC	DEFAULT
1	TRACK	This level is designed exclusively for track use, for expert riders (not recommended for road use). ABS in this level only controls the front wheel, and thus allows rear wheel lockup. The system in this level does NOT control lift-up whereas the cornering feature is active.	It is the default level for the “RACE” riding mode
2	SPORT	This level is designed for use when riding on the road and on the track, with good grip conditions. ABS in this level controls both wheels and the cornering function is active. In this level system does NOT control lift-up: this calibration focuses on braking power and wheel lift-up should be managed by the rider. In this level, also the slide control under braking is active.	It is the default level for the “SPORT” riding mode

ABS	RIDING MODE	CHARACTERISTIC	DEFAULT
3	STABILITY	This level is designed for use in any riding conditions to provide a safe and consistent braking action. ABS in this level controls both wheels and the cornering and anti-lift-up functions are active.	It is the default level for the “STREET” Riding Mode

Tips on how to select the sensitivity level

Attention

Excellent operation of the ABS system, for all available levels, is ensured only with the OE brake system and with OE tyres and/or with the ones recommended by Ducati. In particular, OE tyres for this motorcycle are Pirelli Diablo Supercorsa SP in the following sizes: front 120/70 ZR17 M/C (58W), rear 200/60 ZR17 M/C (80W). The use of tyres of different size and characteristics to the original tyres may alter the operating characteristics of the system thus making it unsafe. It is recommended not to install tyres of different size than the ones approved for your vehicle.

Selecting level 3, the ABS will ensure a kind of braking that privileges stability thanks to lift-up control, and the motorcycle will keep a good alignment during the whole braking action. ABS level 3 features active cornering function which, with vehicle leaning over, prevents wheel lockup and skidding as much as possible, within the physical limits allowed by the vehicle and by the road conditions.

Selecting level 2, the ABS will privilege more and more the braking power rather than stability and lift-up control, which is disabled in level 2. ABS level 2 features active cornering function which, with vehicle leaning over, prevents wheel lockup and skidding as much as possible, within the physical limits allowed by the vehicle and by the road conditions. Moreover, level 2 activates the function of slide control under braking (available in this level only).

ABS level 1 is specific for track use and ABS is active only on the front wheel to help performance. In this level there is no lift-up control, but the cornering feature remains active.

The choice of the correct level mainly depends on the following parameters:

1) The tyre/road grip (type of tyre, amount of tyre wear, the road/track surface, weather conditions, etc.).
2) The rider's experience and sensitivity: expert riders can tackle a lift-up in trying to reduce the stopping distance to a minimum, while less expert riders are recommended to use setting 3,

that will help them keeping the motorcycle more stable even in emergency braking.

Setting Menu - Riding Mode - DAVC

This function allows setting the levels of functions DTC DWC DSC grouped in the DAVC function associated to each riding mode.
The DAVC function is the package of electronic controls (DTC, DWC, DSC) managing motorcycle traction during the acceleration phase.

- Enter the Setting menu.
- Use buttons (1) and (2) to select item “Riding Mode” and press the ENTER button (3).
- Select the Riding Mode you wish to customise and press ENTER (3).
- Select the “DAVC” item and press ENTER (3).

The following items will be displayed in this menu: “DTC”, “DWC”, “DSC”, “Default” (visible only if one or more parameters are different from the default ones).
Use buttons (1) and (2) to scroll and select the desired item. Press the ENTER button (3) to confirm.
To exit the menu and return to the previous screen, select the “Back” item and press the ENTER button (3).

For the DTC function, refer to paragraph page 155.
For the DWC function, refer to paragraph page 161.
For the DSC function, refer to paragraph page 167.

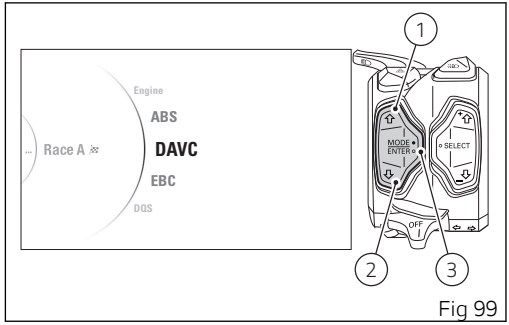

Fig 99

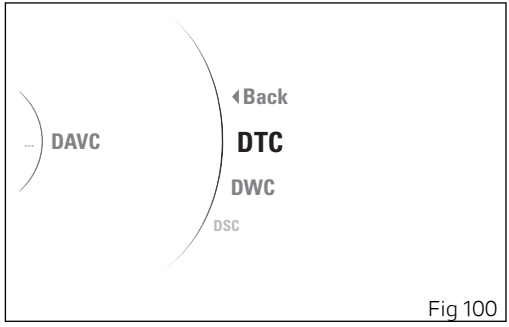

Fig 100

Resetting the DAVC default parameters

By selecting “Default” and pressing the ENTER button (3), the default parameters of the DAVC function (DTC, DWC and DSC) are restored for the selected Riding Mode.
From this moment (and until one or more parameters are customised) the "Default" indication is no longer visible.

Setting Menu - Riding Mode - DAVC - DTC

Attention

When the DTC is set to Off, the DWC is also automatically set to Off, so both the wheelie control and the vehicle dynamics stabilisation control are deactivated.

The Ducati Traction Control system (DTC) supervises the rear wheel slipping control and settings vary through eight different levels that are calibrated to offer a different tolerance level to rear wheel slipping. Each Riding Mode features a pre-set intervention level. Level 8 indicates system intervention whenever a slight slipping is detected, while level 1 is for track use and very expert riders because it is less sensitive to slipping and intervention is hence softer.

This function allows setting the intervention level of the DTC traction control system or deactivating it.

- Enter the Setting menu.
- Use buttons (1) and (2) to select item “Riding Mode” and press the ENTER button (3).
- Select the Riding Mode you wish to customise and press ENTER (3).

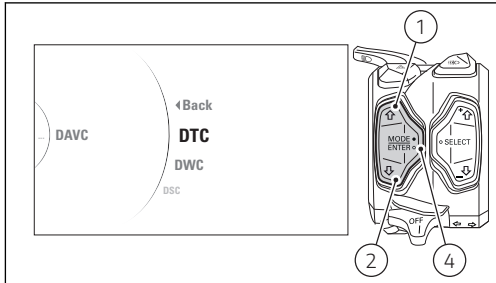

Fig 101

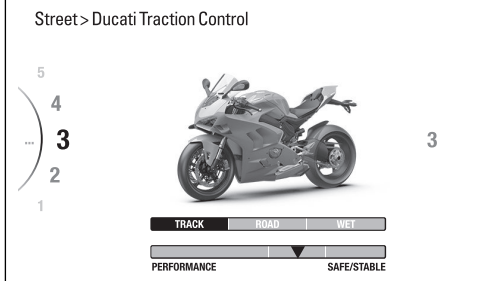

Fig 102

- Select the “DAVC” item and press ENTER (3).
- Select the “DTC” item and press ENTER (3).

Levels from 1 to 8 and “Off” are displayed on the left-hand side. While the currently set level is shown on the right. The motorbike is shown in the middle with the part involved in the setting highlighted and the reference indications.
Use buttons (1) and (2) to scroll and select the desired level. Press the ENTER button (3) to confirm.
To exit the menu and return to the previous screen, select the “Back” item and press the ENTER button (3).

Attention

DTC is a rider aid that can be used both on the road and on the track. The system is designed to make riding easier and to enhance safety, but in no way relieves the rider of the obligation to drive responsibly and to maintain a high standard of riding in order to avoid accidents, whether caused by his own errors or those of other road users, through making emergency manoeuvres, in accordance with the prescriptions of the road traffic code.

The rider must always be aware that active safety systems have a preventive function. The active elements help the rider control the motorcycle, making it as easy and safe to ride as possible. The presence of an active safety system should not encourage the rider to ride at speeds beyond the reasonable limits, not in accordance with the road conditions, the laws of physics, good riding standards and the requirements of the road traffic code.

The following table indicates the most suitable level of DTC intervention for the various riding modes, as well as the default settings in the “Riding Mode” that can be selected by the rider:

DTC	RIDING MODE	CHARACTERISTIC	DEFAULT
OFF		The DTC is disabled.	NO
1	TRACK Professional	This level is designed for exclusive track use, for very expert riders. In this mode, the DTC allows side slipping.	NO
2	TRACK	This level is designed for exclusive track use and for very expert riders. It is optimised for OEM tyres. In this mode, the DTC allows side slipping.	NO
3	SPORT / TRACK	This level is designed for track use and for expert riders. In this mode, the DTC allows side slipping.	It is the default level for the "RACE A" and "RACE B” Riding Modes.
4	SPORT / TRACK	This level is designed for track use (and road use, for expert riders).	NO
5	SPORT	This level is designed for riding on the road or on the track, consistent with ENGINE LOW operation.	It is the default level for the "SPORT" Riding Mode.

DTC	RIDING MODE	CHARACTERISTIC	DEFAULT
6	SAFE & STABLE	This level is designed for use in any riding conditions, on the road with good grip.	It is the default level for the "STREET" Riding Mode.
7	RAIN	This level is designed for track use, exclusively with Rain tyres when surface is wet.	NO
8	HEAVY RAIN	This level is designed for road use, when surface is wet and very slippery. ENGINE LOW must be used for an optimum operation of this level.	NO

Tips on how to select the sensitivity level

Attention

Excellent operation of the DTC system, for all available levels, is ensured only with OE tyres and/or with the ones recommended by Ducati and with the OE final drive ratio. In particular, OE tyres for this motorcycle are Pirelli Diablo Supercorsa SP in the following sizes: 120/70ZR17 at the front, 200/60ZR17 at the rear. The use of tyres of different size and characteristics to the original tyres may alter the operating characteristics of the system thus making it unsafe. It is recommended not to install tyres of different size than the ones approved for your vehicle.

As far as tyres are concerned, in the case of minor differences such as, for example, tyres of a different make and/or model than the OE ones, it is necessary to use the relevant automatic calibration function in order to restore correct system operation.

As far as the final ratio is concerned, when using a different ratio (which only possible for tracing use) than the original equipment one, it is recommended to use the relevant automatic calibration function in order to restore optimal system operation.

If level 8 is selected, the DTC will kick in at the slightest hint that the rear wheel is starting to spin. Between level 8 and level 1 there are other 6 intermediate levels. DTC intervention gradually decreases from level 8 to level 1.

The choice of the correct level depends on 3 main variables:

1) The grip (type of tyre, amount of tyre wear, the road/track surface, weather conditions, etc.).
2) The characteristics of the path/circuit (bends all taken at similar speeds or at very different speeds).
3) The riding mode (whether the rider has a "smooth" or a "rough" style).

Level depends on grip conditions

The choice of level setting depends greatly on the grip conditions of the track/path (see below, tips for use on the track and on the road). Poor grip requires a higher level that ensures a more aggressive DTC intervention.

Level depends on type of track

If the track/path features bends all taken at similar speeds, it will be easier to find a level suitable for all

bends; while a track/path with bends all requiring different speeds will require a DTC level setting that is the best compromise for all bends.

Level depends on riding style

The DTC will tend to kick in more with a "smooth" riding style, where the motorcycle is leaned over further, rather than with a "rough" style" where the motorcycle is straightened up as quickly as possible when exiting a turn.

Tips for use on the track

We recommend that level 6 is used for a couple of full laps in order to heat the tyres and get used to the system. Then try levels 6, 5, 4, etc., in succession until you identify the DTC sensitivity level that suits you best.
Once you have found a satisfactory setting for all the corners except one or two slow ones, where the system tends to kick in and control too much, you can try to modify your riding style slightly to a more "rough" approach to cornering i.e. straighten up more rapidly on exiting the corner, instead of immediately trying a different level setting.

Tips for use on the road

We recommend the level in order to get used to the system. If the level of DTC intervention seems aggressive, try reducing the setting to levels 5, 4, etc., until you find the level that suits you best.
If changes occur in the grip conditions and/or circuit characteristics and/or your riding style, and the level setting is no longer suitable, switch to the next level up or down and proceed to determine the best setting (e.g. if with level 7 the DTC intervention seems excessive, switch to level 6; alternatively, if on level 7 you cannot perceive any DTC intervention, switch to level 8).

Setting Menu - Riding Mode - DAVC - DWC

Attention

When the DTC is set to Off, the DWC is also automatically set to Off, so both the wheelie control and the vehicle dynamics stabilisation control are deactivated.

The Ducati Wheelie Control system (DWC) supervises control of wheelie movement and settings vary through eight different levels that are calibrated to offer a different prevention and reaction to wheelies. Each Riding Mode features a pre-set intervention level. Level eight indicates a setting that minimises motorcycle tendency to shift up in a wheelie and maximises reaction to the same, if it occurs. While level one is for expert riders and features a lower wheelie control in terms of prevention and less strong reaction to the same, if it occurs.

This function allows setting the intervention level of the DWC or deactivating it.

- Enter the Setting menu.
- Use buttons (1) and (2) to select item “Riding Mode” and press the ENTER button (3).

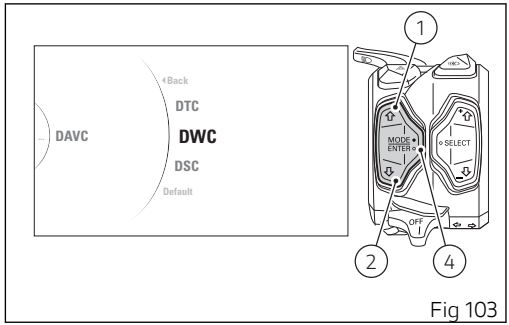

Fig 103

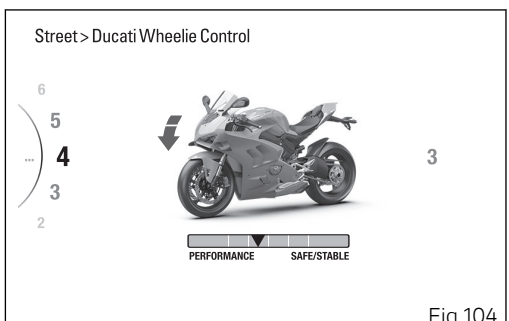

Fig 104

- Select the Riding Mode you wish to customise and press ENTER (3).
- Select the “DAVC” item and press ENTER (3).
- Select the “DWC” item and press ENTER (3).

Levels from 1 to 8 and “Off” are displayed on the left-hand side. The currently set level is displayed on the right (Fig 104). The motorbike is shown in the middle with the part involved in the setting highlighted and the reference indications.
Use buttons (1) and (2) to scroll and select the desired level. Press the ENTER button (3) to confirm.
To exit the menu and return to the previous screen, select the “Back” item and press the ENTER button (3).

Attention

DWC is a rider aid that can be used on both the track and the road. The system is designed to make riding easier and to enhance safety, but in no way relieves the rider of the obligation to drive responsibly and to maintain a high standard of riding in order to avoid accidents, whether caused by his own errors or those of other road users, through making emergency manoeuvres, in accordance with the prescriptions of the road traffic code.

The rider must always be aware that active safety systems have a preventive function. The active elements help the rider control the motorcycle, making it as easy and safe to ride as possible. The presence of an active safety system should not encourage the rider to ride at speeds beyond the reasonable limits, not in accordance with the road conditions, the laws of physics, good riding standards and the requirements of the road traffic code.

The following table indicates the most suitable level of DWC intervention for the various riding modes, as well as the default settings in the “Riding Mode” that can be selected by the rider:

DWC	USE		DEFAULT
OFF		The DWC is disabled.	NO
1	HIGH PERFORMANCE	Track use for expert riders. The system allows wheelies, but decreases the speed at which the front wheel lifts.	NO
2	MEDIUM PERFORMANCE	Track use for expert riders. The system allows wheelies, but decreases the speed at which the front wheel lifts.	It is the default level for the "RACE A" Riding Mode.
3	PERFORMANCE	Track use for expert riders. The system allows wheelies, but decreases the speed at which the front wheel lifts.	It is the default level for the "RACE B" Riding Mode.
4	PERFORMANCE	Track use for all kinds of riders. The system allows wheelies, but decreases the speed at which the front wheel lifts.	It is the default level for the "SPORT" Riding Mode.
5	SPORT	Level for all kinds of riders. The system reduces the motorcycle's proneness to do wheelies and sensitively intervenes in case of wheelie.	It is the default level for the "STREET" Riding Mode.

DWC	USE		DEFAULT
6	SPORT	Level for all kinds of riders. The system reduces the motorcycle's proneness to do wheelies and sensitively intervenes in case of wheelie.	NO
7	MEDIUM SAFE & STABLE	Level for all kinds of riders. The system reduces the motorcycle's proneness to do wheelies and sensitively intervenes in case of wheelie.	NO
8	HIGH SAFE & STABLE	Level for all kinds of riders. The system reduces the motorcycle's proneness to do wheelies to a minimum level and sensitively intervenes in case of wheelie.	NO

Tips on how to select the sensitivity level

Attention

Excellent operation of the DWC system, for all available levels, is ensured only with the OE final drive ratio and with OE tyres and/or with the ones recommended by Ducati. In particular, OE tyres for this motorcycle are Pirelli Diablo Supercorsa SP in the following sizes: 120/70ZR17 at the front, 200/60ZR17 at the rear. The use of tyres of different size and characteristics to the original tyres may alter the operating characteristics of the system thus making it unsafe. It is recommended not to install tyres of different size than the ones approved for your vehicle.

As for tyres, in the case of minor differences, such as for example, tyres of a different make and/or model than the OE ones, but with the same size (rear = 200/60 ZR17; front = 120/70 ZR17), it is necessary to use the relevant automatic calibration function in order to restore correct system operation.

As far as the final ratio is concerned, when using a different ratio (which only possible for tracing use) than the original equipment one, it is recommended to use the relevant automatic calibration function in order to restore optimal system operation.

At level 8 the DWC system reduces the motorcycle's proneness to do wheelies to a minimum level and sensitively intervenes in case of wheelie. Between level 8 and level 1 there are further intermediate levels of intervention for the DWC. Levels 1, 2 and 3 allow easier wheelies, but reduce their speed: these levels are recommended only for track use and for expert riders who can control wheelies on their own and exploit the system feature that reduces the speed at which the front wheel tends to lift.

The choice of the correct level mainly depends on the following parameters:

- The rider's experience;
- The characteristics of the path/circuit (bend exit with low or high gear engaged).

The rider's experience

The choice of level setting depends greatly on the riders' experience and ability to control wheelies on their own. Levels 1, 2 and 3 require a great experience to ensure proper control.

Level depends on type of track

If the track/path features bends where out speed and gear are low, a lower level will be necessary; while a track/path with faster bends will allow the use of a higher level setting.

Tips for use on the track

We recommend to use level 8 for a couple of full laps in order to get used to the system. Then try levels 7, 6, etc., in succession until you identify the DWC sensitivity level that suits you best (always try each level for at least two laps to allow the tyres to warm up).

Tips for use on the road

Activate the DWC, select level 8 and ride the motorcycle in your usual style; if the level of DWC sensitivity seems excessive, try levels 7, 6, etc., until you find the one that suits you best. If changes occur in the circuit characteristics, and the level setting is no longer suitable, switch to the next level up or down and proceed to determine the best setting (e.g. if with level 7 the DWC intervention seems excessive, switch to level 6; alternatively, if on level 7 you cannot perceive any DWC intervention, switch to level 8).

Setting Menu - Riding Mode - DAVC - DSC

The Ducati Slide Control (DSC) system assists the rider during the acceleration when exiting a curve in order to better control the side slipping of the rear wheel. The system thus improves the intervention of the single DTC function that works on the tyre longitudinal slipping providing better assistance in extreme riding conditions.
The DSC system works on 2 different levels, each calibrated to offer a different intervention on the side slipping of the tyre in combination with a specific DTC level.

This function disables DSC level for the selected riding mode.

- Enter the Setting menu.
- Use buttons (1) and (2) to select item “Riding Mode” and press the ENTER button (3).
- Select the Riding Mode you wish to customise and press ENTER (3).
- Select the “DAVC” item and press ENTER (3).
- Select the “DSC” item and press ENTER (3).

Levels 1, 2 and “Off” (Fig 106) are displayed on the left. While the currently set level is shown on the

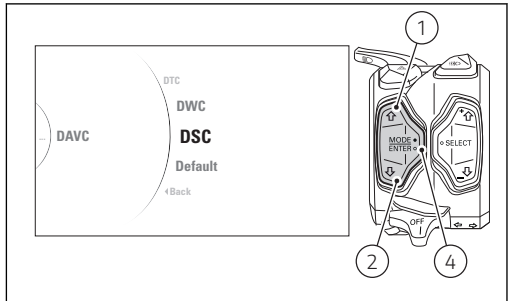

Fig 105

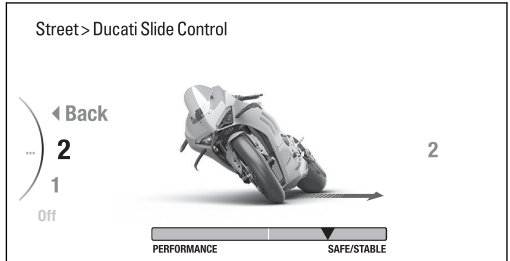

Fig 106

right. The motorbike is shown in the middle with the part involved in the setting highlighted and the reference indications.
Use buttons (1) and (2) to scroll and select the desired level. Press the ENTER button (3) to confirm.
To exit the menu and return to the previous screen, select the “Back” item and press the ENTER button (3).

The following table indicates the most suitable DSC intervention level depending on the riding modes. Depending on the selected DTC level, the different levels are optimized for tyres and the indicated DTC levels.

DSC	USE	DEFAULT
OFF	The DSC is disabled.	NO
1	The basic intervention level depends on the selected DTC level. The DSC system increases the intervention extent in a limited way in order limit side slipping.	NO
2	The basic intervention level depends on the selected DTC level. The DSC system increases the intervention extent in a more significant way in order limit side slipping.	It is the default level for the “RACE A”, “RACE B”, “SPORT” and “STREET” Riding Modes.

Attention

The DSC system assists the rider in the control of the rear tyre side slipping and facilitates the acceleration out of curves. Therefore, the system does not prevent the rider from reaching potentially dangerous leaning angles and for safety reasons it must be used with due riding care.

Tips on how to select the intervention level

According to the riding style, the curve-exit phase can be performed in a rougher or smoother way and can lead to different leaning angles. Therefore, it is suitable to follow the indications provided below to identify the intervention level most appropriate for your riding style.
To this end, we recommend to identify first the most suitable DTC level according to the indications provided in the DTC system description. Then, we recommend selecting the DSC 2 level, i.e. the most invasive intervention, and ride some laps to become familiar with the system. If the system intervention on the lateral grip is too strong, we recommend trying DSC 1 level, associated to a softer intervention.
If non-OEM tyres of a different size class are used or if the tyre size differs significantly from the original tyres, it may be that the system operation is compromised.
As far as tyres are concerned, in the case of minor differences such as, for example, tyres of a different make and/or model than the OE ones, it is necessary to use the relevant automatic calibration function in order to restore correct system operation.

Attention

The DSC is a rider assist system. The system is designed to make riding easier and to enhance safety, but in no way relieves the rider of the obligation to drive responsibly and to maintain a high standard of riding in order to avoid accidents, whether caused by his own errors or those of other road users, through making emergency manoeuvres, in accordance with the prescriptions of the road traffic code.

The rider must always be aware that active safety systems have a preventive function. The active elements help the rider control the motorcycle, making it as easy and safe to ride as possible. The presence of an active safety system should not encourage the rider to ride at speeds beyond the reasonable limits, not in accordance with the road conditions, the laws of physics, good riding standards and the requirements of the road traffic code.

Setting Menu - Riding Mode - EBC

The Engine Braking Control (EBC) system controls engine braking when riding with throttle control completely closed (both when downshifting and in a normal cut-off with the same gear engaged, while braking or not). This system independently adjusts the throttle valves to ensure a consistent torque goes back from the wheel to engine during these stages.

The system allows the rider to set "engine brake", the range being from a maximum engine braking with system set to 1 and progressively decreasing as level increases.

System is particularly sensitive at high rpm and sensitivity gradually decreases as soon as engine rpm decrease.

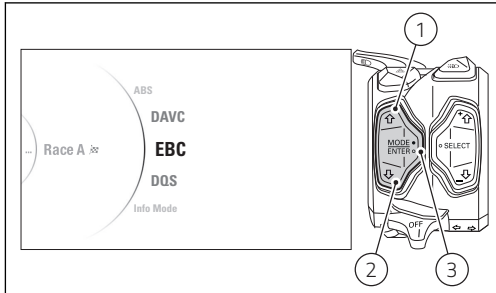

Fig 107

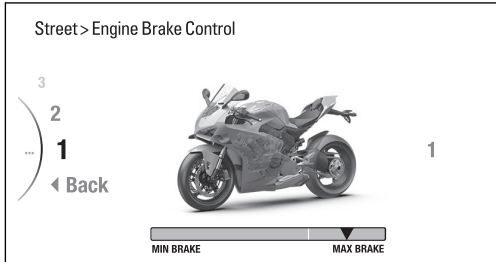

Fig 108

Attention

EBC is a rider aid that can be used both on the track and the road. The system is designed to make riding easier, but in no way relieves the rider of the obligation to ride responsibly and to maintain a high standard of riding in order to avoid accidents, whether caused by his own errors or those of other road users, through making emergency manoeuvres, in accordance with the prescriptions of the road traffic code.

This function allows setting the EBC intervention level.

- Enter the Setting menu.
- Use buttons (1) and (2) to select item “Riding Mode” and press the ENTER button (3).
- Select the Riding Mode you wish to customise and press ENTER (3).
- Select the “EBC” item and press ENTER (3).

Levels from 1 to 3 and “Off” (Fig 108) are displayed on the left. While the currently set level is shown on the right. The motorbike is shown in the middle with the part involved in the setting highlighted and the reference indications.
Use buttons (1) and (2) to scroll and select the desired level. Press the ENTER button (3) to confirm.

To exit the menu and return to the previous screen, select the “Back” item and press the ENTER button (3).

The following table indicates the most suitable level of EBC intervention for the various riding modes, as well as the default settings in the “Riding Mode” that can be selected by the rider:

EBC	CHARACTERISTIC	DEFAULT
1	In this level the engine delivers a fairly significant engine brake.	It is the default level for all Riding Modes
2	In this level the engine delivers a poor engine brake. This level is recommended to any rider requiring reduced engine braking in deceleration.	NO
3	In this level the engine delivers the least engine brake. This level is recommended to any rider requiring very low engine braking in deceleration.	NO

Tips on how to select the sensitivity level

Attention

Excellent operation of the EBC system, for all available levels, is ensured only with OE tyres and/or with the ones recommended by Ducati and with the OE final drive ratio. In particular, OE tyres for this motorcycle are Pirelli Diablo Supercorsa SP in the following sizes: 120/70ZR17 at the front, 200/60 ZR17 at the rear. The use of tyres of different size and characteristics to the original tyres may alter the operating characteristics of the system thus making it unsafe. It is recommended not to install tyres of different size than the ones approved for your vehicle.

As far as tyres are concerned, in the case of minor differences such as, for example, tyres of a different make and/or model than the OE ones, it is necessary to use the relevant automatic calibration function in order to restore correct system operation.
As far as the final ratio is concerned, when using a different ratio (which only possible for tracing use) than the original equipment one, it is recommended to use the relevant automatic calibration function in order to restore optimal system operation.

Selecting level 3, the EBC will kick in to ensure the minimum engine brake possible. Between level 3 and level 1 there are progressively increasing engine brake levels.
The choice of the correct level mainly depends on the following parameters:

- The grip (type of tyre, amount of tyre wear, the road/track surface, weather conditions, etc.).
- The characteristics of the path/circuit (bends all taken at similar speeds or at very different speeds).
- The Riding Mode.

Level depends on grip conditions

The choice of level setting depends greatly on the grip conditions of the track/circuit.

Level depends on type of track

If the track/path requires consistent braking (always aggressive or always smooth), it will be easier to find a level suitable for all braking instances; while a track/path requiring different braking power will require an EBC system level setting that is the best compromise for all instances.

Setting Menu - Riding Mode - DQS

This function allows activating or deactivating the DQS system.

- Enter the Setting menu.
- Use buttons (1) and (2) to select item “Riding Mode” and press the ENTER button (3).
- Select the Riding Mode you wish to customise and press ENTER (3).
- Select the “DQS” item and press ENTER (3).

Levels “Up/Down” and “Off” are displayed on the left. While the currently set level is shown on the right. The motorbike is shown in the middle with the part involved in the setting highlighted and the reference indications.
Use buttons (1) and (2) to scroll and select the desired level. Press the ENTER button (3) to confirm.
To exit the menu and return to the previous screen, select the “Back” item and press the ENTER button (3).

The DQS with up/down feature allows the rider to upshift and downshift without using the clutch lever. It includes a two-way microswitch - built in the lever mechanism - that outputs a signal to the engine control unit whenever the gearshift is operated.

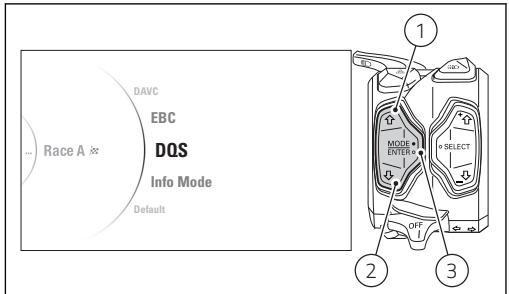

Fig 109

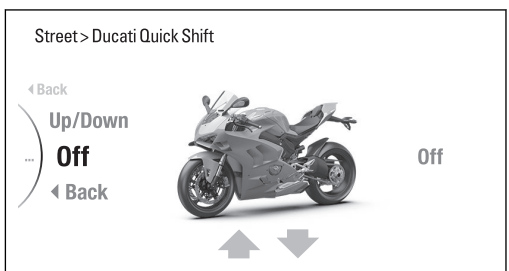

Fig 110

The system works in a different way when upshifting and downshifting.

Here below are some tips that will ensure you properly exploit this feature:

- The Ducati Quick Shift takes the same shift lever operation as with vehicle not equipped with the Ducati Quick Shift. Ducati Quick Shift is not designed for shifting automatically.
- For any gearshift request (up or down) the rider has to move the shift lever from its idle position in the desired direction against the force of the spring through a certain over-travel, then keep the shift lever in this position until the gearshift is completed. Once the gearshift has been completed, the lever has to be fully released in order to allow another gearshift acted by Ducati Quick Shift. If the rider does not move the shift lever up to end stroke during a Ducati Quick Shift request, gears may not be fully engaged.
- Ducati Quick Shift provides no assistance for the gearshift if the rider uses the clutch lever: the Ducati Quick Shift does not work when the clutch lever is pulled.
- Ducati Quick Shift will shift down only when the throttle control is completely closed.
- If the Ducati Quick Shift strategy does not work it is always possible to complete the gear shifting using the clutch lever.
- If the gear lever is held pressed up or down for more than 30 seconds (even if just by accident) a plausibility error can be memorised in the electronic control unit and the Ducati Quick Shift system could be disabled; in this case, a simple key-off and key-on cycle will reactivate the system.
- Ducati Quick Shift is designed to operate above 2,500 rpm.
- No matter the gear engaged, downshifting with Ducati Quick Shift only woks below a set threshold, so as to avoid exceeding the maximum rpm allowed when the lower gear is engaged.

Setting Menu - Riding Mode - Info Mode

This function allows rider to select the main screen displaying mode associated with every Riding Mode (see page 105).

- Enter the Setting menu.
- Use buttons (1) and (2) to select item “Riding Mode” and press the ENTER button (3).
- Select the Riding Mode you wish to customise and press ENTER (3).
- Select the "Info Mode" item and press ENTER (3).

The "Track", "Road", "Track Evo", "Default" Info Modes are displayed on the left (visible only if the currently set Info Mode is not the default one). The currently set Info Mode is displayed on the right side. The bike is displayed in the centre with the part being set highlighted.
Use buttons (1) and (2) to scroll and select the desired Info Mode. Press the ENTER button (3) to confirm. To exit the menu and return to the previous screen, select the “Back” item and press the ENTER button (3).

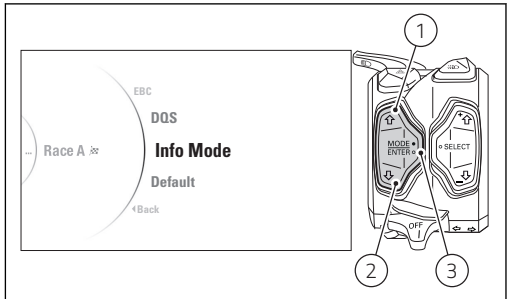

Fig 111

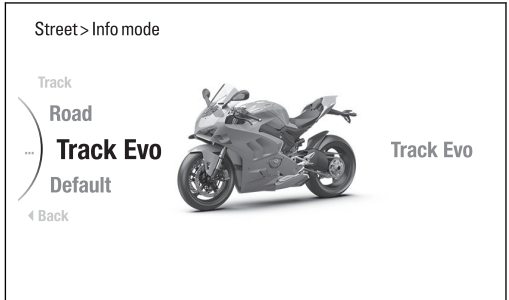

Fig 112

Restoring the default Info Mode

By selecting the "Default" item and pressing the ENTER button (3) you will restore the default Info Mode for the selected Riding Mode.
From this moment (and until a different Info Mode is set) the "Default" indication is no longer visible.

The Info Modes are by default associated with the Riding Modes as follows:

1) Track for the Sport Riding Mode
2) Road for the Street Riding Mode
3) Track Evo for the Race A and Race B Riding Modes

Setting Menu - Riding Mode - Default and All Default

This function allows restoring the values of the parameters linked to the Riding Modes set by Ducati, and is visible only if the parameters have been previously modified.

Resetting of parameter values for a single Riding Mode:

- Enter the Setting menu.
- Use buttons (1) and (2) to select item “Riding Mode” and press the ENTER button (3).
- Select the Riding Mode you wish to customise and press ENTER (3).
- Select the “Default” item and press ENTER (3).

The default parameters for the selected Riding Mode are reset.
From this moment (and until one or more parameters are customised) the "Default" indication is no longer visible.

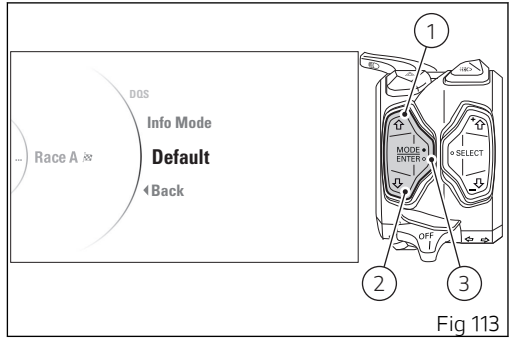

Fig 113

Resetting of parameter values for all Riding Modes:

- Enter the Setting menu.
- Use buttons (1) and (2) to select item “Riding Mode” and press the ENTER button (3).
- Select the “All Default” item and press ENTER (3).

The default parameters for all Riding Modes are restored.
From this moment (and until one or more parameters are customised for one or more Riding Modes) the "All Default" indication is no longer visible.

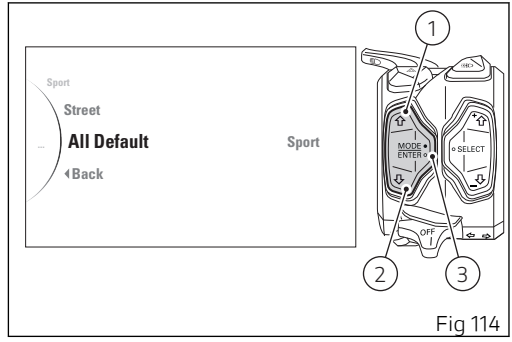

Fig 114

Setting Menu - Pin Code

This function allows the user to activate or modify the Pin Code.
The Pin Code is initially not present in the motorcycle, it must be activated by the user by entering his/her 4-digit PIN in the instrument panel, otherwise the motorcycle cannot be started temporarily in the case of a malfunction.
In order to temporarily start the motorcycle in case of malfunction, please refer to the procedure called “Restoring motorcycle operation via the Pin Code”.

Attention

The Pin Code must be activated and stored by the vehicle owner. If a Pin Code is already set, please contact your Ducati authorised dealer to reset it. The Ducati authorised dealer may ask you to demonstrate that you are the owner of the motorcycle.

- Enter the Setting menu.
- Use buttons (1) and (2) to select item “Pin Code” and press the ENTER button (3).

If the Pin Code has never been activated, this menu will include “New Pin” item to activate it. While if the Pin Code has already been activated, this menu will include “Modify Pin” item, which allows modifying the already stored pin.

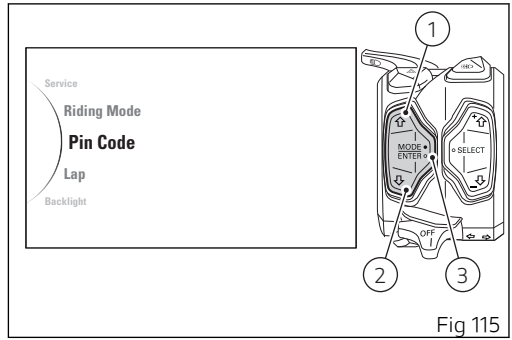

Fig 115

New Pin Code

- Enter the Setting menu.
- Use buttons (1) and (2) to select item “Pin Code” and press the ENTER button (3).
- Select the "New Pin" item and press the ENTER button (3).

The display shows the message “New Pin” and the spaces to enter the four digits of the new pin (Fig 117). The two arrows above and below the first digit give the possibility to set it. Entering the code:

- Use buttons (1) and (2) to increase and decrease by 1 the value from “0” to “9”.
- Press the ENTER button (3) to confirm the digit and move on to the following digit.
- Repeat the procedure until entering all 4 digits.

Fig 116

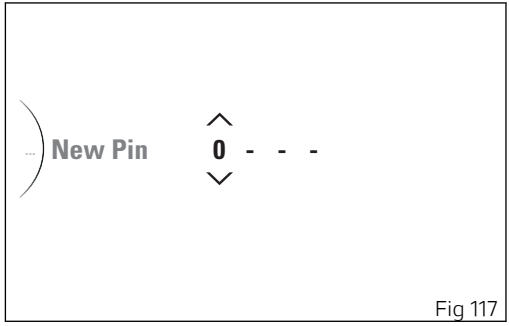

Fig 117

Once the fourth and last digit is set, press the ENTER button (3) and the orange message "Memory" will be displayed. Press again the ENTER button (3) to store the entered code: green "Memorized" indication will be displayed for 2 seconds.
The instrument panel will display again the Pin Code home menu, and show “Modify Pin” instead of “New Pin” option.

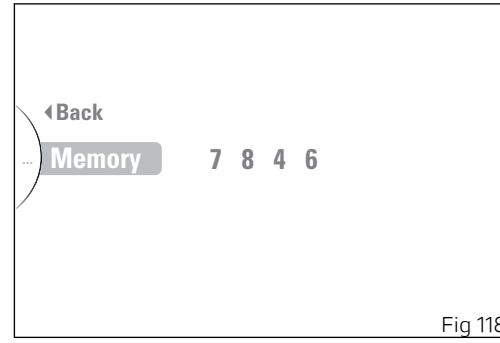

Fig 118

Changing the Pin Code

- Enter the Setting menu.
- Use buttons (1) and (2) to select item “Pin Code” and press the ENTER button (3).
- Select the "Modify Pin" item and press the ENTER button (3).

The display shows the message “Old Pin” and the spaces to enter the four digits of the old pin (Fig 120). The two arrows above and below the first digit give the possibility to set it. Entering the code:

- Use buttons (1) and (2) to increase and decrease by 1 the value from “0” to “9”.
- Press the ENTER button (3) to confirm the digit and move on to the following digit.
- Repeat the procedure until entering all 4 digits.

Once the fourth digit is set, press ENTER (3) and the instrument panel behaviour will be as follows:

- if the pin code is not correct, the instrument panel displays “Wrong” highlighted in red for 2 seconds and then goes back to previous screen, to allow you to try again;
- if the pin code is correct, the instrument panel shows “Correct” highlighted in green for 2 seconds, and then displays the page for entering

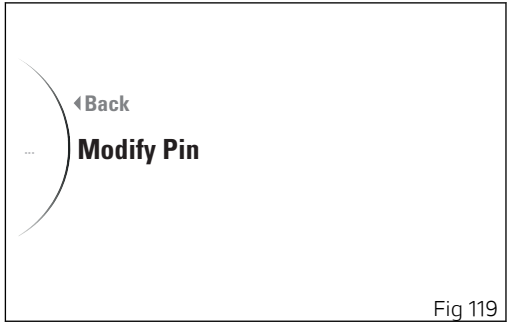

Fig 119

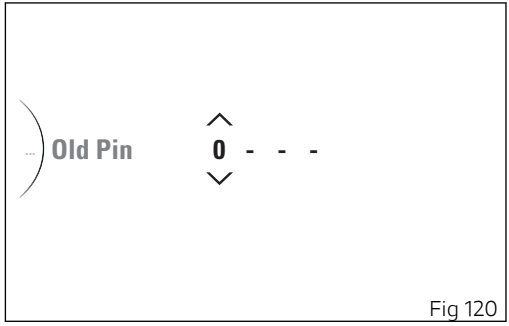

Fig 120

the new Pin Code. In this case, refer to description under “New Pin Code” sub-paragraph, to enter a new code.

Setting Menu - Lap

This function allows enabling or disabling the LAP function (see page 128) and viewing and deleting the recorded LAPs.

- Enter the Setting menu.
- Use buttons (1) and (2) to select item “Lap” and press the ENTER button (3).

In this menu the function current status is displayed on the right side and the following items on the left side:

- "Off" to disable the LAP function.
- "On" to enable the LAP function.
- “Lap Data” to view the stored laps.
- “Erase All” to delete all memorised LAPs (visible only if there are memorised LAPs).

Select the desired item using buttons (1) and (2), then press the ENTER button (3).
According to whether the GPS EVO is installed or not, the “Lap Data” function shows the recorded times in LAP BASIC or LAP EVO mode.
Any time the key is turned on, the Lap function is set to “Off”.

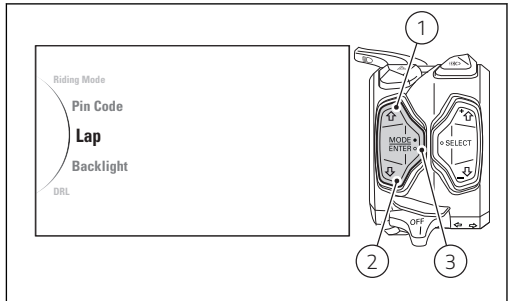

Fig 121

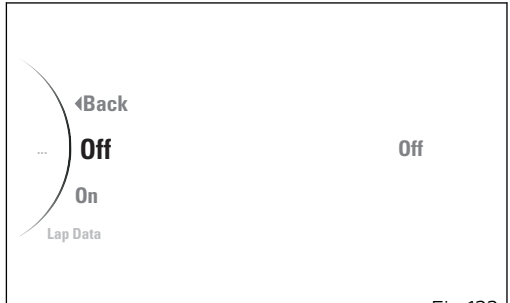

Fig 122

Lap Data (LAP BASIC mode)

- Enter the Setting menu.
- Use buttons (1) and (2) to select item “Lap” and press the ENTER button (3).
- Select the "Lap Data" option and press the ENTER button (3).

When accessing this function, the display shows “Best Laps” and the available LAPs from 1 to 60. Use buttons (1) and (2) to scroll through the memorised LAPs.
Data recorded for each lap are:

- “Time” - the lap time (up to maximum 8’59”00);
- “Real Speed (max)” - the maximum real speed reached and the set unit of measurement;
- “RPM (max)” - the maximum engine rpm reached.
- “Lean angle (max)” - maximum reached lean angle;
- “YAW angle (max)” - maximum reached yaw angle.

Select “Best Laps” to view the best lap time data among the recorded ones.

Note
It is possible to record maximum of 60 LAPs.

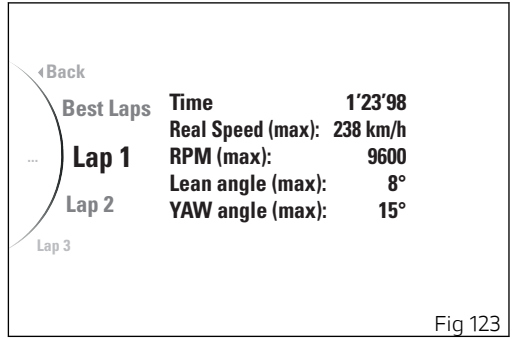

Fig 123

If there are no memorised LAPs, when accessing this menu the instrument panel will show “No Lap”.

Lap Data (LAP EVO mode)

- Enter the Setting menu.
- Use buttons (1) and (2) to select item “Lap” and press the ENTER button (3).
- Select the "Lap Data" option and press the ENTER button (3).

When accessing this function, the display shows “Best Laps”, “Best Intertime 1”, “Best Intertime 2” options and the recorded sessions (max. 6).
To view the LAPs memorised in one session, select the desired session and press the ENTER button (3). The display will show all the LAPs recorded in the selected session (Fig 125).
Use buttons (1) and (2) to scroll through the memorised LAPs.
Data recorded for each lap are:

- “Time” - the lap time (maximum time: 8’59”00);
- “Intertime 1” - if the first intertime point has been configured (maximum time: 8’59”00);
- “Intertime 2” - if the second intertime point has been configured (maximum time: 8’59”00);
- “Real Speed (max)” - the maximum real speed reached and the set unit of measurement (the speed is detected via GPS EVO);
- “RPM (max)” - the maximum engine rpm;

Fig 124

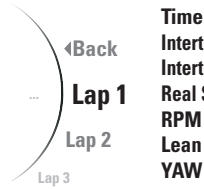

Fig 125

- “Lean angle (max)” - maximum reached lean angle;
- “YAW angle (max)” - maximum reached yaw angle.

Note
It is possible to record maximum of 60 LAPs divided into 6 sessions.

If there are no memorised LAPs, when accessing this menu the instrument panel will show “No Lap”.
For the configuration of the intertimes and the LAP/ session recording, see page 128.

Best Laps (LAP EVO only):

Select “Best Laps” (Fig 124) to view the best lap time data recorded in each sessions.

Best Intertime 1 and Best Intertime 2 (LAP EVO only):

By selecting “Best Intertime 1” or “Best Intertime 2” (Fig 124), the data referred to the best time recorded in each session are displayed, respectively concerning intertime 1 and intertime 2.

Erase All

- Enter the Setting menu.
- Use buttons (1) and (2) to select item “Lap” and press the ENTER button (3).
- Select “Erase All” and press the ENTER button (3).

When accessing this function, the display shows “Erase All”: to delete all recorded LAPs, select the indicated item and keep the ENTER button (3) pressed for 2 seconds. The message “Wait...” is displayed for 3 seconds on the right side, then the instrument panel displays the previous menu.

Setting Menu - Backlight

This function allows setting the display day or night mode and adjusting the intensity of the backlighting.

- Enter the Setting menu.
- Use buttons (1) and (2) to select item “Backlight” and press the ENTER button (3).

The “Mode” and “Dimmering” items are displayed. The currently set level is displayed on the right (Fig 127).
Use buttons (1) and (2) to scroll and select the desired item. Press ENTER (3) to confirm.

To exit the menu and return to the previous screen, select the “Back” item and press the ENTER button (3).

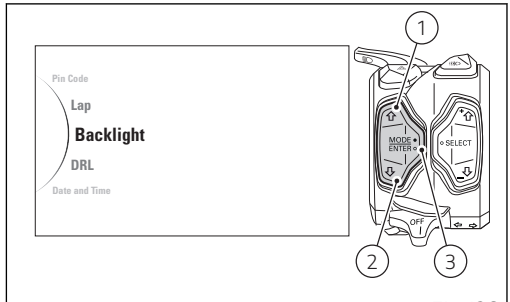

Fig 126

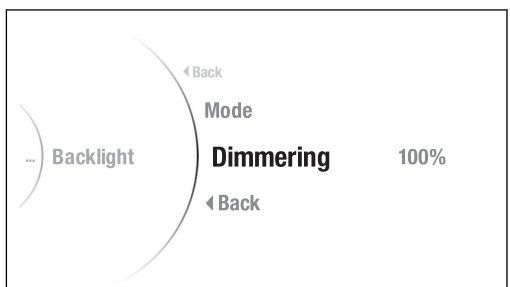

Fig 127

Day or night mode

This function allows setting the display day or night mode.

- Enter the Setting menu.
- Use buttons (1) and (2) to select item “Backlight” and press the ENTER button (3).
- Select the “Mode” item and press ENTER (3).

The “Auto”, “Day” and “Night” items are displayed. While the current status of the function is shown on the right.
The "Auto" mode allows the background colour to automatically change according to the ambient light detected by the instrument panel.
Use buttons (1) and (2) to scroll and select the desired mode. Press ENTER (3) to confirm.

To exit the menu and return to the previous screen, select the “Back” item and press the ENTER button (3).

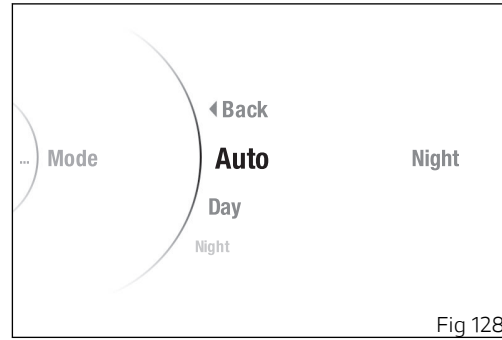

Fig 128

Note
In case of battery disconnection, the "Auto" mode is automatically set.

Dimmering

This function allows adjusting the backlighting intensity.

- Enter the Setting menu.
- Use buttons (1) and (2) to select item “Backlight” and press the ENTER button (3).
- Select the “Dimmering” item and press ENTER (3).

The levels from 100% to 20% are displayed. While the currently set level is shown on the right. The brightness is automatically adjusted according to the ambient light detected by the instrument panel. The backlighting intensity adjustment is calculated in relation to what is detected by the instrument panel.
Use buttons (1) and (2) to scroll and select the desired level. Press ENTER (3) to confirm.

To exit the menu and return to the previous screen, select the “Back” item and press the ENTER button (3).

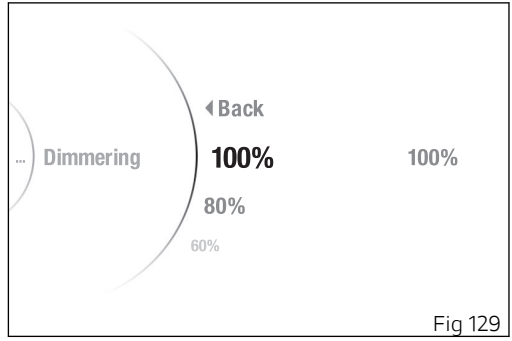

Fig 129

Setting Menu - DRL

This function allows setting the status of the DRL in automatic or manual mode. Available only if daytime running lights (DRL) are present.

- Enter the Setting menu.
- Use buttons (1) and (2) to select item “DRL” and press the ENTER button (3).

“Auto” and “Manual” are displayed in the middle. While the currently set mode is shown on the right. Use buttons (1) and (2) to scroll and select the desired mode. Press ENTER (3) to confirm.
To exit the menu and return to the previous screen, select the “Back” item and press the ENTER button (3).

Note

In case of battery disconnection, the "Auto" mode is automatically set.

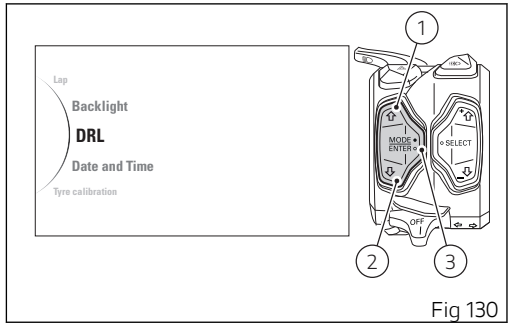

Fig 130

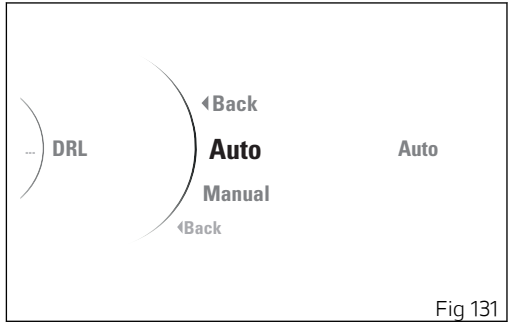

Fig 131

Setting Menu - Date and Time

This function allows setting date and time.

- Enter the Setting menu.
- Use buttons (1) and (2) to select item “Date and time” and press the ENTER button (3).

This menu includes “Date” and “Time” options, while currently set date and time are displayed at the centre.
Select the required option and press the ENTER button (3).
To exit the menu and return to the previous screen, select the “Back” item and press the ENTER button (3).

Note

If the date or time have never been set, a string of dashes “-” is displayed instead of the corresponding values.
Date and time must be set again after battery disconnection.

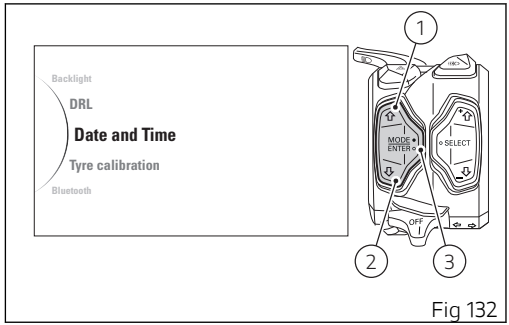

Fig 132

Fig 133

Date (date setting)

- Enter the Setting menu.
- Use buttons (1) and (2) to select item “Date and time” and press the ENTER button (3).
- Select the "Date" option and press the ENTER button (3).
- “Set...” is displayed on the right side while the year flashes at the centre. Set the year using buttons (1) and (2).
- Press the ENTER button (3) to confirm the year.
- The month flashes. Set the month using buttons (1) and (2).
- Press the ENTER button (3) to confirm the month.
- The day flashes. Set the day using buttons (1) and (2).
- Press the ENTER button (3) to confirm the day and save set date.
  If date is not correct, the instrument panel will display "Wrong" for 3 seconds and then it will automatically go back to setting the year and repeat date setting.

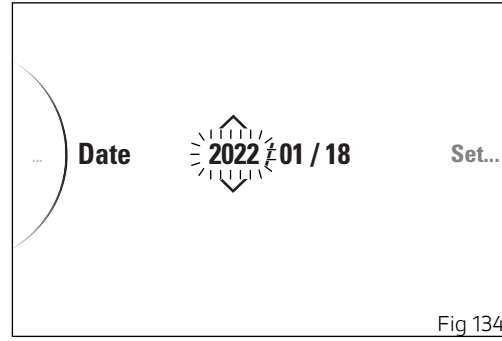

Fig 134

Time (time setting)

- Enter the Setting menu.
- Use buttons (1) and (2) to select item “Date and time” and press the ENTER button (3).
- Select the "Time" option and press the ENTER button (3).
- “Set...” is displayed on the right side while “AM” or “PM” flashes at the centre. Set the parameter using buttons (1) and (2).
- Press the ENTER button (3) to confirm.
- The hour flashes. Set the time using buttons (1) and (2).
- Press the ENTER button (3) to confirm.
- The minutes flash. Set the minutes using buttons (1) and (2).
- Press the ENTER button (3) to confirm and save set time.

Fig 135

Setting Menu - Tyre Calibration

This function allows the user to run the procedure for calibrating and teaching in the tyre rolling circumference or to restore their original values.

This function allows the user to run the procedure for calibrating and teaching in the tyre rolling circumference or to restore their original values. It also allows you to correctly learn the final drive ratio (front sprocket/rear sprocket) in the event of modifications to the approved configuration. Refer to the table of permitted front sprocket/rear sprocket combinations for this model, if any.

Then perform the Tyre Calibration function:

- if tyres must be replaced
- if final drive ratio must be changed

To open this function:

- Enter the Setting menu.
- Use buttons (1) and (2) to select item “Tyre Calibration” and press the ENTER button (3).

The options "Start" and "Default" are displayed (visible only if user set a calibration different from the default one).
Select the required option and press the ENTER button (3).

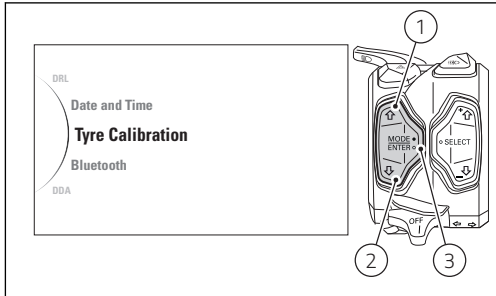

Fig 136

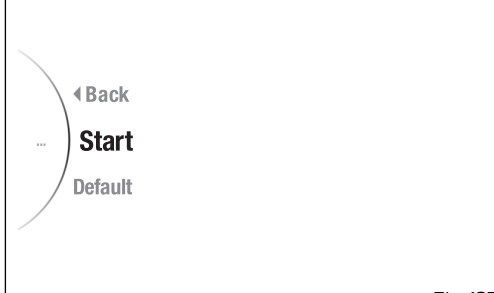

Fig 137

To exit the menu and return to the previous screen, select the “Back” item and press the ENTER button (3).

Tyre calibration - Start

By pressing ENTER (3) for 2 seconds with “Start” displayed, the instrument panel shows the screen to proceed with calibration.
This screen shows the message "Ready" and the indication to keep the speed constant between 49 (30 mph) and 51 Km/h (32 mph), with second gear engaged.
When the rider complies with the required conditions of speed and gear indicated, the instrument panel starts system calibration: all previous information will be displayed showing "In progress" instead of "Ready".
Calibration is performed by keeping speed and gear within the indicated range for 5 seconds.

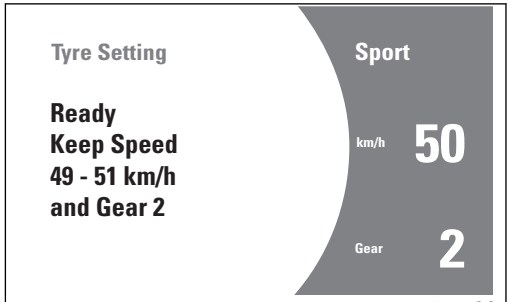

Fig 138

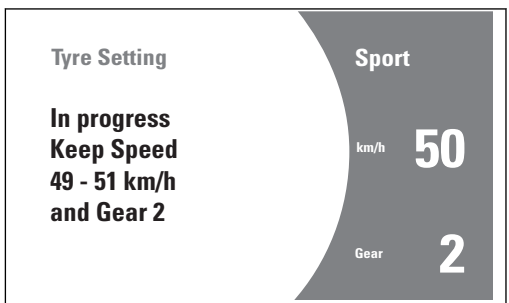

Fig 139

If the teach-in procedure is completed correctly, the instrument panel shows “Completed” followed by the previous menu after a few seconds.
The procedure can be aborted by holding button (1) pressed for a long time: in this case the instrument panel displays all previous information, replacing message "In progress" with message "Aborted", followed by the previous menu after a few seconds.

If during the calibration procedure the required speed and gear conditions are not maintained, or an error or malfunction occurs, the instrument panel displays the message "Failed" and after a few seconds returns to the previous menu.

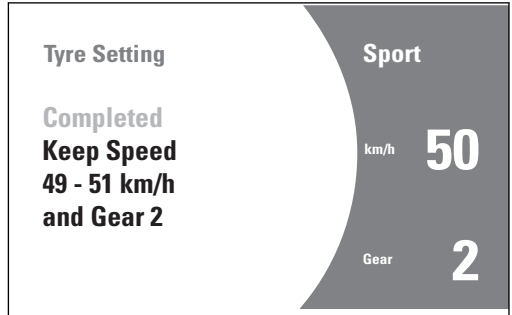

Fig 140

Attention
Changing the final drive ratio is only allowed for circuit (racetrack) use of the motorcycle, not on public roads.

Attention
In the event of front sprocket and/or rear sprocket replacement, after performing the “Tyre Calibration” procedure, it is necessary to go to an authorised Ducati dealer who will perform a “drive adaptive system reset” with the diagnosis instrument. This allows you to avoid false plausibility diagnoses related to the final drive ratio modification.

Attention
Changing the final drive ratio immediately makes the warranty null and void and the motorcycle can not be used on public roads as it no longer corresponds to the type-approved version.

Final drive ratio		Rear sprocket						
		38	39	40	41	42	43	44
Front sprocket	15	2.53	2.60	2.67	2.73	2.80	2.87	2.93
	16	2.38	2.44	2.50	2.56	2.63	2.69	2.75
	17	2.24	2.29	2.35	2.41	2.47	2.53	2.59
	18	2.11	2.17	2.22	2.28	2.33	2.39	2.44

Tyre calibration - Default

By pressing the ENTER button (3) with the "Default" item (Fig 137) selected, the instrument panel displays the message "Wait..." for 2 seconds, followed by the message "Default restored" for 2 seconds and then returns to the previous menu.

Note

If during the calibration procedure a vehicle key-off is performed, the procedure will stop and end with negative result.

Setting Menu - DDA

This function allows you to enable and disable the DDA, view the percentage of memory used and to delete data stored in the DDA memory.

- Enter the Setting menu.
- Use buttons (1) and (2) to select item “DDA” and press the ENTER button (3).

Displayed items within this menu are "Off", "On" and "Memory", while function current status is on the RH side.
Use buttons (1) and (2) to scroll and select the desired item. Press ENTER (3) to confirm.

To exit the menu and return to the previous screen, select the “Back” item and press the ENTER button (3).

Note

The DDA is automatically disabled by the instrument panel upon every Key-OFF.

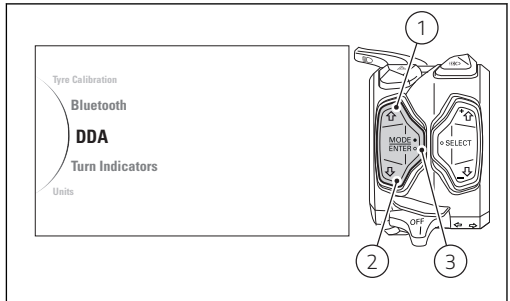

Fig 141

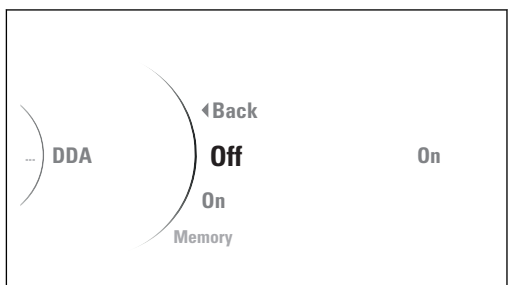

Fig 142

Memory

This function allows viewing and erasing DDA stored information.

- Enter the Setting menu.
- Use buttons (1) and (2) to select item “DDA” and press the ENTER button (3).
- Select the "Memory" option and press the ENTER button (3).

When opening the function, the message "Empty" will be displayed if memory is empty. If not, memory status is displayed as a percentage and a progress bar, together with item "Erase". The message "Full" will be displayed if memory is full.
Select "Erase" option and press the ENTER button (3) to delete all stored data.

To exit the menu and return to the previous screen, select the “Back” item and press the ENTER button (3).

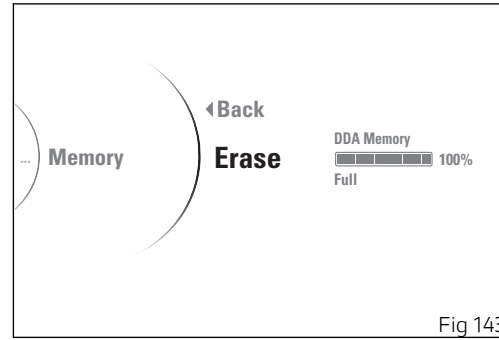

Fig 143

Setting Menu - Turn indicators

This function allows user to set the turn indicators to automatic mode or manual mode.
The turn indicator automatic switch-off strategy is implemented based on calculation of leaning angle, vehicle speed and run distance.

- Enter the Setting menu.
- Use buttons (1) and (2) to select item “Turn Indicators” and press the ENTER button (3).

The “Auto” and “Manual” items are displayed. While the current status of the function is shown on the right.
Use buttons (1) and (2) to scroll and select the desired item. Press ENTER (3) to confirm.

To exit the menu and return to the previous screen, select the “Back” item and press the ENTER button (3).

Note

In case of battery disconnection, the automatic mode is set.

Automatic switch-off: The turn indicators switch off automatically after the turn, as calculated based on vehicle speed, leaning angle and in general

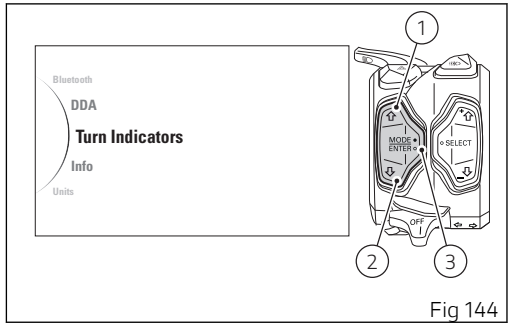

Fig 144

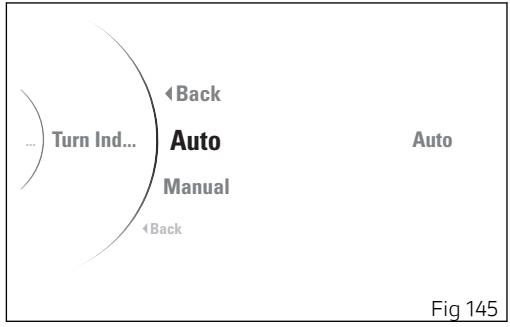

Fig 145

according to the analysis of vehicle dynamic conditions.
This means that automatic switch-off is triggered when vehicle speed exceeds 20 km/h (12.4 mph) after the turn indicator button was pressed.
Turn indicators also switch off automatically if they remained on for a long mileage, which can range between 200 and 2000 metres (656-6562 feet), depending on vehicle speed when the turn indicator button was pressed.
If the turn indicator switch is again operated, while turn indicator is still on, automatic switch-off feature is re-initialised.

Note
At any moment, if the instrument panel finds that the ABS control unit is in error, system will disable the set automatic switch-off strategy (so turn indicators will not be disabled automatically).

Setting Menu - Units

This function allows setting the units of measurement used by the instrument panel.

- Enter the Setting menu.
- Use buttons (1) and (2) to select item “Units” and press the ENTER button (3).

The “Speed”, “Temperature”, “Consumption”, “All Default” items are displayed (visible only if one or more parameters are different from the default ones).
Use buttons (1) and (2) to scroll and select the desired item. Press ENTER (3) to confirm.

To exit the menu and return to the previous screen, select the “Back” item and press the ENTER button (3).

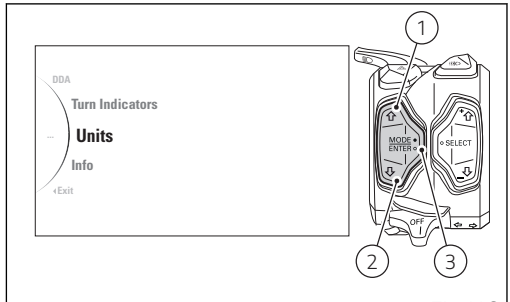

Fig 146

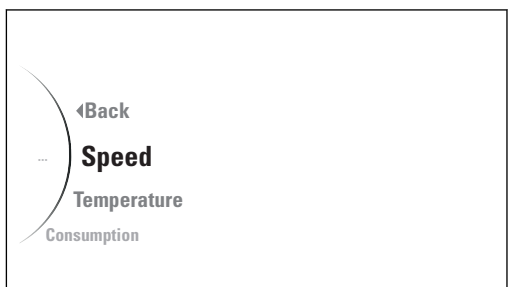

Fig 147

Speed

- Enter the Setting menu.
- Use buttons (1) and (2) to select item “Units” and press the ENTER button (3).
- Select the "Speed" option and press the ENTER button (3).

Options “km/h”, “mph” and “Default” are listed (visible only if currently set unit of measurement is not the default one). The currently set unit of measurement is shown on the right side.
With buttons (1) and (2) it is possible to select the desired measurement or “Default” to reset the default unit of measurement. Press ENTER (3) to confirm.

To exit the menu and return to the previous screen, select the “Back” item and press the ENTER button (3).

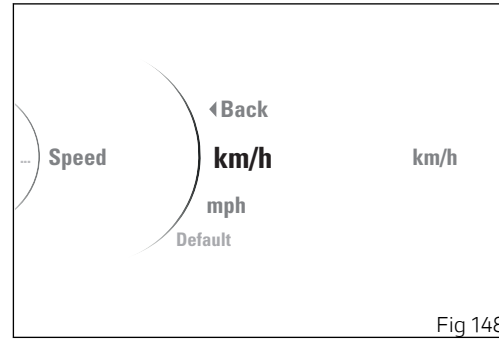

Fig 148

Temperature

- Enter the Setting menu.
- Use buttons (1) and (2) to select item “Units” and press the ENTER button (3).
- Select the "Temperature" option and press the ENTER button (3).

Options “°C”, “°F” and “Default” are listed (visible only if currently set unit of measurement is not the default one). The currently set unit of measurement is shown on the right side.
With buttons (1) and (2) it is possible to select the desired measurement or “Default” to reset the default unit of measurement. Press ENTER (3) to confirm.

To exit the menu and return to the previous screen, select the “Back” item and press the ENTER button (3).

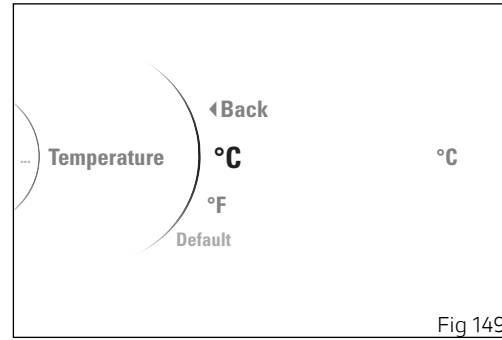

Fig 149

Consumption

- Enter the Setting menu.
- Use buttons (1) and (2) to select item “Units” and press the ENTER button (3).
- Select the "Consumption" option and press the ENTER button (3).

Options “l/100”, “km/l”, “mpg UK”, “mpg US” and “Default” are listed (visible only if currently set unit of measurement is not the default one). The currently set unit of measurement is shown on the right side.
With buttons (1) and (2) it is possible to select the desired measurement or “Default” to reset the default unit of measurement. Press ENTER (3) to confirm.

To exit the menu and return to the previous screen, select the “Back” item and press the ENTER button (3).

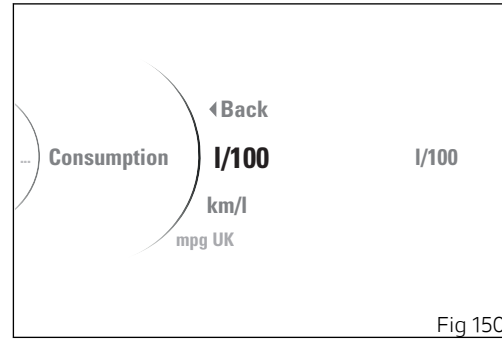

Fig 150

Setting Menu - Info

This function allows viewing the vehicle battery voltage and the engine rpm digital indication.

- Enter the Setting menu.
- Use buttons (1) and (2) to select item “Info” and press the ENTER button (3).

The display shows the information concerning the battery and engine rpm in a digital format. This function does not allow any kind of changes. Press the ENTER button (3) to quit and go back to previous display mode.

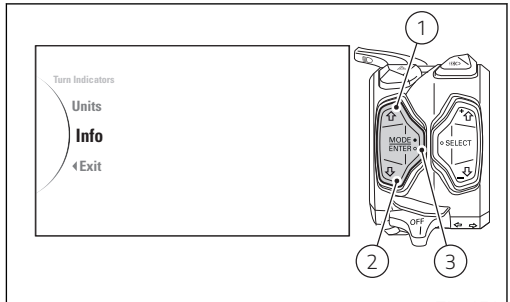

Fig 151

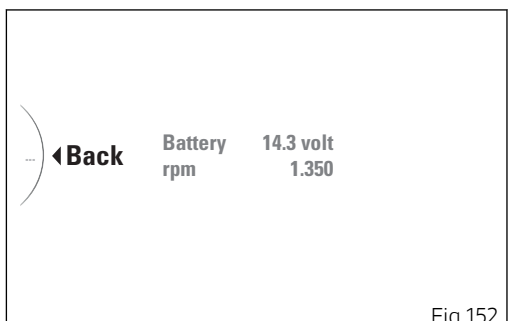

Fig 152

Assisted start (DPL)

This Function allows activating the DPL (Ducati Power Launch) function.

By pressing button (4) it is possible to access the Launch Control menu only if the vehicle speed is equal to or less than 5 Km/h (3 mph).

In the Launch Control menu, it is possible to select the desired DPL level (1, 2, 3) by pressing buttons (1) and (2), and to set the selected level by keeping the ENTER button (3) pressed for 2 seconds.

Note

If no change is made in this menu within ten seconds, the instrument panel will set DPL to OFF and go back to the previous screen.

Note

If the instrument panel detects a control unit error when entering the DPL menu, it will show the blinking message “Launch Control Error” for three seconds and then again the main screen.

Note

If the available launches are finished, the instrument panel shows the message “No launches available”.

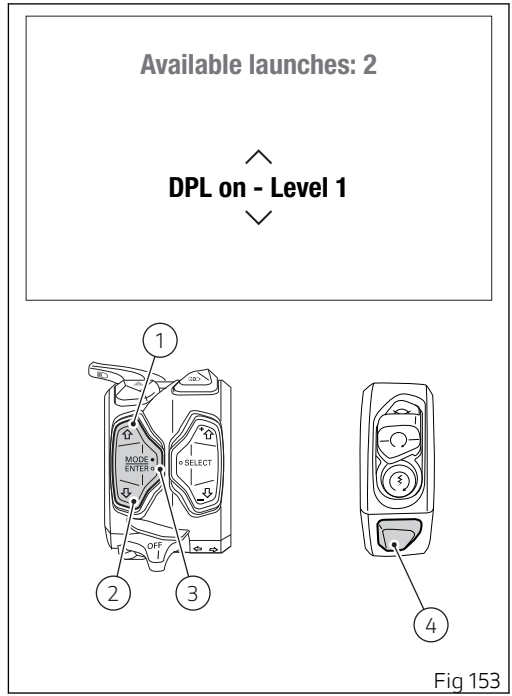

Fig 153

Note

If the DTC is set to “Off” and you press the DPL button, the instrument panel shows for 5 seconds the indication “DTC off – DPL not available” and then the instrument panel goes back to the main screen.

Once the DPL level is set, the instrument panel shows the wait screen (A) for 2 seconds: during this time, if you press the ENTER button (3), the wait phase is interrupted and the instrument panel displays the main screen and sets the DPL to OFF. The instrument panel then displays the “assisted start” screen in mode (B) for Track and Road Info Modes, in mode (C) in the Track Evo Info Mode (see page 105).
After the assisted start, the instrument panel sets the DPL to OFF and shows the main screen again. The DPL is set to OFF by default by Ducati.

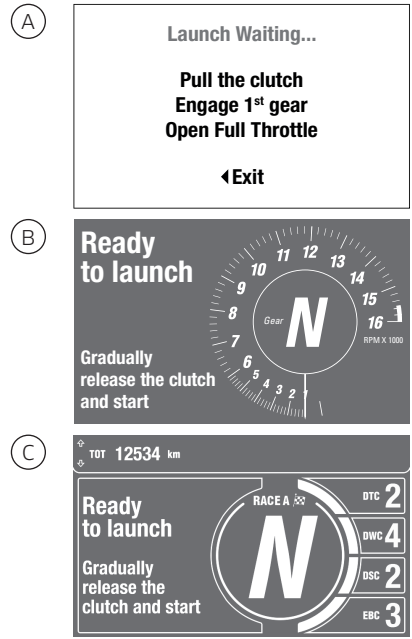

Fig 154

The Ducati Power Launch (DPL) helps the rider in the delicate sport starting phase from a standstill to control the power delivered by the vehicle.
The DPL system works with three intervention levels, each calibrated to offer a different start assist degree.
The following table indicates the most suitable DPL intervention level depending on the various starting types. All levels are to be intended optimised for OEM (Original Equipment Manufactured) tyres.

DPL level	Performance	Use
1	High	Use focused on the best performance for very expert riders. The system allows the wheelie and the rear wheel slipping, but reduces the speed at which these two situations take place.
2	Medium	Use for expert riders. The system reduces the tendency to wheelie and rear wheel slipping, besides intervening considerably in case these two situations take place.
3	Medium	Use for all kinds of riders. The system minimises the tendency to wheelie and rear wheel slipping, besides intervening considerably in case these two situations take place.

Attention
The DPL system is to be used exclusively on straight and level paths, on optimal grip conditions of the road.
The DPL system is conceived to be used within a controlled environment or in a closed circuit. For safety reasons it must not be used in unsuitable places.

Starting procedure

The starting procedure basically consists of two phases:

- the first: with not completely released clutch so that the torque transmitted to the ground depends on the clutch position and slipping;
- the second: with clutch not released so that the torque transmitted to the ground depends on the torque delivered by the engine.

The DPL system helps the rider to start from a standstill and during the first phase by automatically adjusting the torque delivered by the engine to keep the engine rpm at the ideal value to start. This allows the rider to concentrate only on the clutch release that must be progressive and "smooth" instead of fast or abruptly. The engine torque is adjusted also in the second phase, by maximising the delivered power and limiting the vehicle wheeling or rear wheel slipping.

To preserve the clutch, the DPL system calculates in real time and shows in the dedicated menu on the instrument panel the number of starts that can be performed consecutively by decreasing it by one unit every time a start is completed. The DPL system increases the value by one unit according to the distance covered by the vehicle and the time during which the vehicle engine was on and off.
The DPL system allows performing other assisted starts only when the number of remaining starts is higher than zero.

Attention
Using the DPL system could reduce the useful life of the engine and transmission mechanical parts. The DPL system should be used only when the engine has reached the operating temperature.

To perform an assisted start with the DPL, the rider must first of all set the vehicle in the following condition:

- vehicle speed at zero;
- vertical position;

- engine on;
- DTC set to ON.

If the count of the residual assisted starts is above zero, the rider can select on the instrument panel the desired DPL level by accessing the relevant menu through the dedicated button.
After selecting the level, the rider must pull the clutch, engage the first gear and fully open the throttle twistgrip.

If all operations indicated above have been performed, the DPL system will show a confirmation screen on the instrument panel indicating that the system is ready to start. The rider must then release the clutch progressively by keeping the throttle twistgrip fully open. When the vehicle speed exceeds 20 km/h, the dashboard shows the standard screen while keeping the indication of the selected DPL system level for the entire duration of the start phase.

The DPL system is switched off when one of the following conditions is met after completely releasing the clutch:
- vehicle speed higher than 160 km/h;
- third gear engaged.

The DPL system is switched off also if, after releasing the clutch, the rider decides to interrupt the start phase by closing the throttle and bringing the vehicle speed under 5 km/h.

Attention
The system manages the power delivered by the engine but not the clutch lever release that remains under the control of the rider.
During the starting phase, an abrupt release of the clutch will prevent an optimal behaviour of the vehicle. Likewise, a prolonged activation of the clutch may overheat and thus damage it.

Attention
The rider position on the bike may influence the system behaviour.

Tips on how to select the intervention level

If level 3 is set, the DPL system intervenes by reducing the tendency to wheelie or rear wheel slipping during the starting phase. Levels 2 and 1 provide a limited intervention of the system.

To identify the DPL level most suitable to your riding style we recommend to activate the system, select level 3 and perform a start to become familiar with

the system. Then we recommend to try levels 2 and 1 in sequence until finding the best intervention.

If non-OEM tyres of a different size class are used or if the tyre size differs significantly from the original tyres, it may be that the system operation is compromised.

As far as tyres are concerned, in the case of minor differences such as, for example, tyres of a different make and/or model than the OE ones, it is necessary to use the relevant automatic calibration function in order to restore correct system operation.

Attention

The DPL is a rider assist system. The system is designed to make riding easier and to enhance safety, but in no way relieves the rider of the obligation to drive responsibly and to maintain a high standard of riding in order to avoid accidents, whether caused by his own errors or those of other road users, through making emergency manoeuvres, in accordance with the prescriptions of the road traffic code.
The rider must always be aware that active safety systems have a preventive function. The active elements help the rider control the motorcycle, making it as easy and safe to ride as possible. The presence of an active safety system should not encourage the rider to ride at speeds beyond the reasonable limits, not in accordance with the road conditions, the laws of physics, good riding standards and the requirements of the road traffic code.

Heated handgrips

This function allows the user to activate and set the handgrip heating. This is only available if heated handgrips are fitted to the motorcycle.

To enable and set the level of the heated handgrips, press button (1). The heated handgrips icon will be displayed in large mode (A). Each time the button is pressed it cycles through the OFF, LOW, MED, HIGH levels indicated by the arrows on the symbol (in the example “LOW”).

To confirm the set level, simply do not press the button (1) for 3 seconds: the heated handgrips icon is then displayed in the small mode (B).

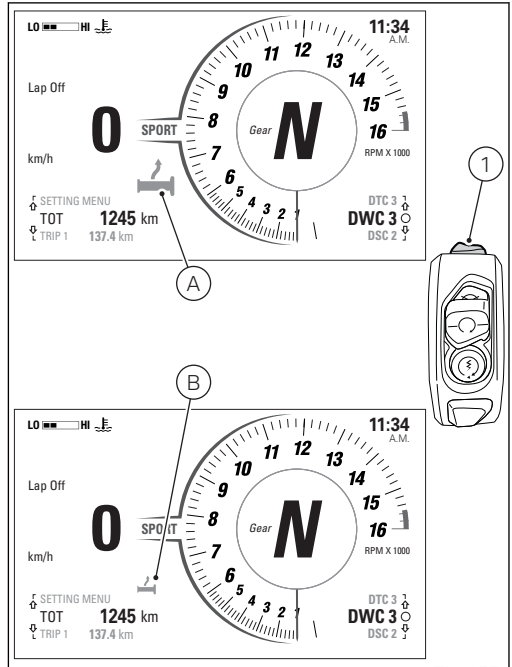

Fig 155

In the Track Evo Info Mode, the icon of the heated handgrips is shown in the box (C).

Note

The actual turning on (heating) of the heated handgrips occurs only with engine started, and when a certain number of engine rpm have been reached and maintained: heating power is limited to 50% up to 2,000 rpm.

The heated handgrips icon is coloured grey when the heating is not active. When the heated handgrips are on, the icon is displayed in black in day mode, white in night mode (see page 191).

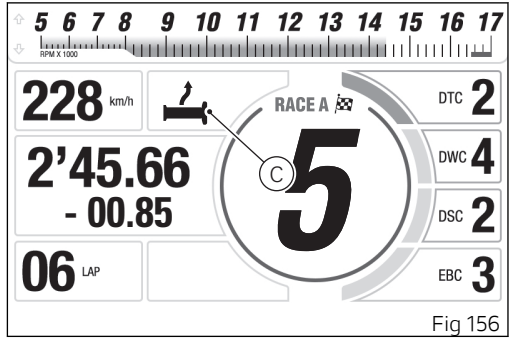

Fig 156

Warning displaying

The instrument panel manages a number of warnings and alarms, aimed at giving useful information to the rider during use.
If Track or Road Info Mode was set, if there are any active warnings, the instrument panel will display the messages for all the present warnings or alarms: in a large size (A) for the first 3 seconds and then in a smaller size (B).
When several warnings or alarms are active, they are displayed in a sequence, one every 3 seconds.

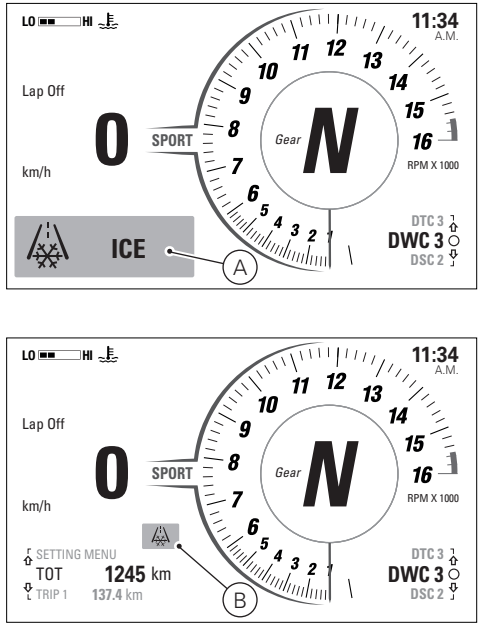

Fig 157

If Track Evo Info Mode was set, in case of active warnings, the instrument panel displays the present warnings or alarms in a dedicated area (C).
When several warnings or alarms are active, they are displayed in a sequence, one every 3 seconds.

ICE

This warning means that there might be ice on the road, due to a low temperature.
Warning is activated when the instrument panel detects a temperature of 4°C (39°F) or lower than that. Warning will be disabled as soon as temperature rises up to 6°C (43°F).

Attention
This warning does not exclude the fact that there may be some ice on the road also if temperature is higher than 4 °C (39 °F). When the temperature is low, it is recommended to always ride with great care, especially on path sections not under the sun and/or bridges.

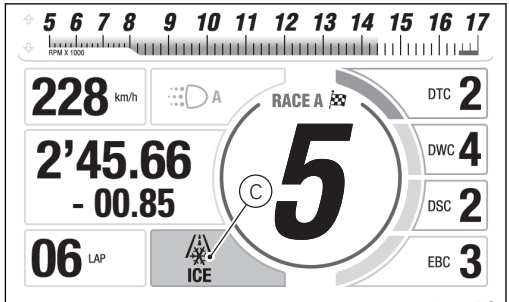

Fig 158

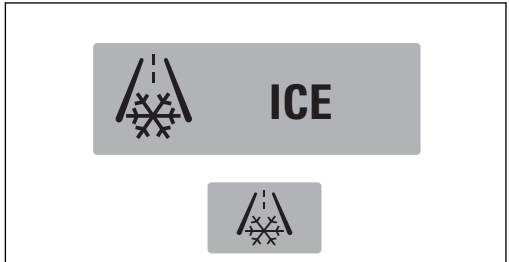

Fig 159

LOW BATTERY

This warning indicates that the vehicle battery voltage is low.
Warning is activated when battery voltage is lower than/equal to 11.0 Volt.

Note
In this case, Ducati recommends charging the battery in the shortest delay using the relevant equipment.

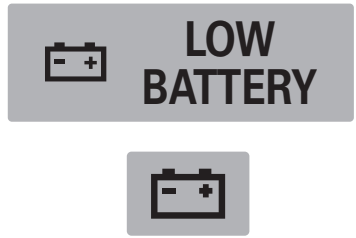

Fig 160

INSERT DATE

This warning indicates that it is necessary to set the date (see page 194).

DDA FULL

This warning indicates that DDA memory is full and no more data can be stored (see page 204).

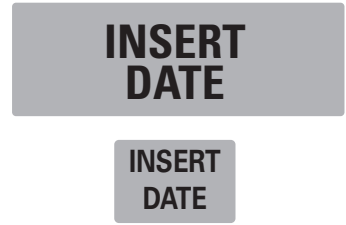

Fig 161

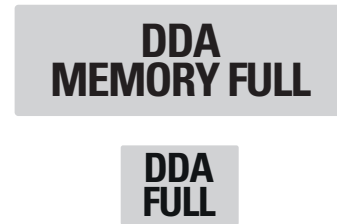

Fig 162

ABS REAR OFF

This warning indicates that it is necessary to ride carefully because the ABS setting in use only controls the front wheel braking.

Attention

In this case, Ducati recommends paying particular attention to the riding style and the braking mode.

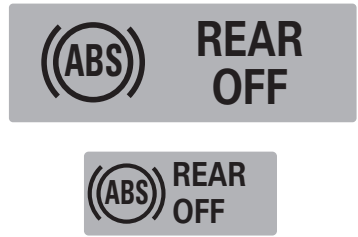

Fig 163

Error warnings

The instrument panel manages error warnings in order to allow the rider to identify any abnormal motorcycle behaviour in real time.
In the event of an error, on the main screen, the instrument panel displays the indication in red in large format (A) flashing for the first 10 seconds and then in small format (B)
(Track and Road Info ModesFig 164),
(Track Evo Info ModeFig 165).
The warning then remains active until the error is resolved.
When several errors are active, they are displayed in a sequence, one every 5 seconds.

DTC ERROR!

The activation of this error indicates that it is necessary to go to a Ducati Authorised Service Centre because there is an error in the vehicle's DTC.

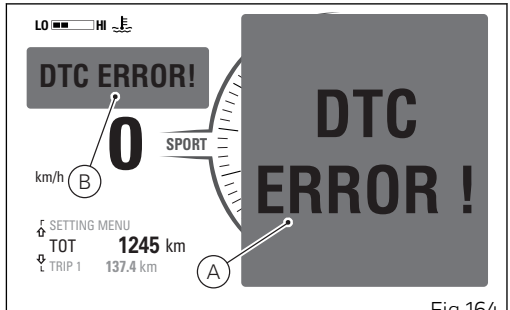

Fig 164

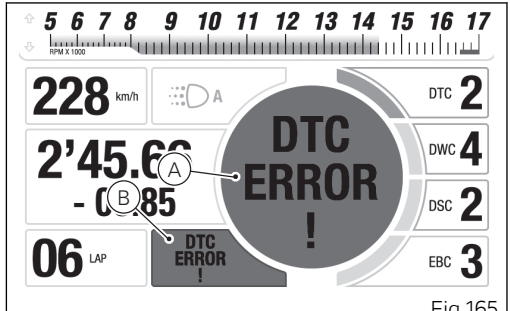

Fig 165

ABS ERROR!

The activation of this error indicates that it is necessary to go to a Ducati Authorised Service Centre because there is an error in the vehicle's ABS (Track and Road Info ModesFig 166),
(Track Evo Info ModeFig 167).

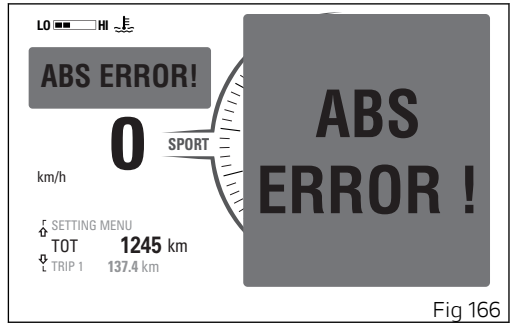

Fig 166

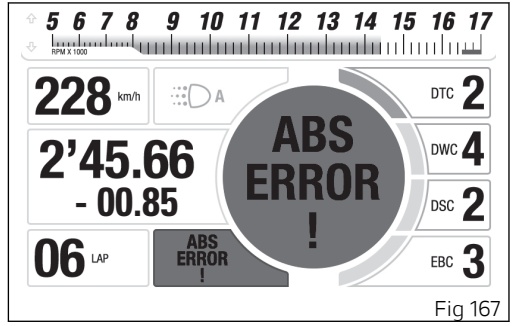

Fig 167

Main use and maintenance operations

Removing the fairing

To carry out some maintenance or repair operations, some motorcycle fairings must be removed.

Attention
Failed or incorrect refitting of one of the removed components could cause its sudden detachment while riding resulting in loss of control of the motorcycle.

Important
At every reassembly, to avoid damaging the painted areas and the Plexiglass windscreen, always place the nylon washers at the retaining screws.

Important
Have the fairing removal performed at a Ducati Dealer or Authorised Service Centre.

Change air filter

Important
Have the air filter maintenance performed at a Ducati Dealer or Authorised Service Centre.

"Checking coolant level and topping up, if necessary"

Check the level according to the intervals indicated in the tables in "Scheduled maintenance chart".
Check coolant level in the expansion reservoir, on the right side of the vehicle, through the inner sight slot, gaining access from the front wheel housing.
Check that the level is between the MIN (1) and MAX (2) marks on the side of the expansion reservoir.
Top up if the level is below the MIN mark.

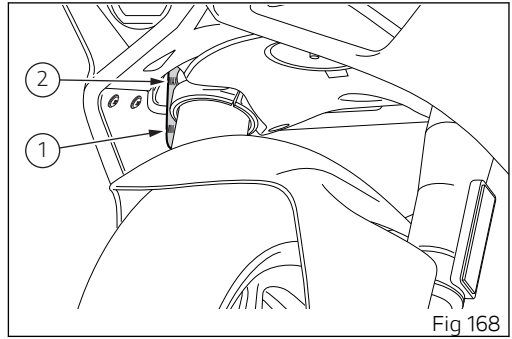

Fig 168

Attention

Place the motorcycle upright on a flat surface and make sure the engine is cold before proceeding.

Important

Have the top-up performed at a Ducati Dealer or Authorised Service Centre.

Checking brake and clutch fluid level

The levels should not fall below the MIN marks on the respective reservoirs.
If level drops below the limit, air might get into the circuit and affect the operation of the system involved.
Fluid must be topped up and changed at the intervals specified in the scheduled maintenance table reported in the Warranty Booklet; please contact a Ducati Dealer or authorised Service Centre.

Brake system

If you find exceeding clearance on brake lever or pedal and brake pads are still in good condition, contact your Ducati Dealer or authorised Service Centre to have the system inspected and any air drained out of the circuit.

Attention

Brake and clutch fluid can damage paintwork and plastic parts, so avoid contact.
Hydraulic fluid is corrosive; it may cause damage and lead to severe injuries. Never mix fluids of different qualities. Check seals for proper sealing.

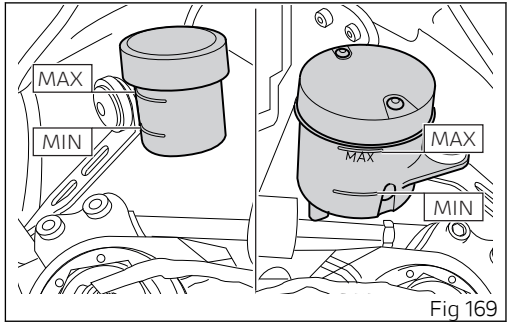

Fig 169

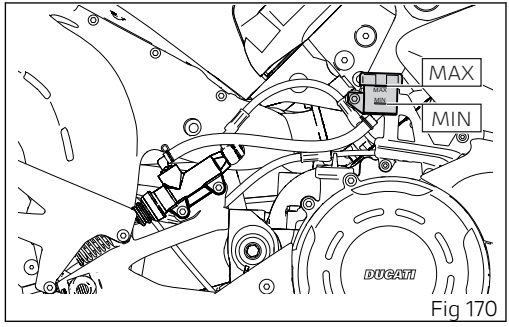

Fig 170

Clutch system

If the control lever has exceeding clearance and the transmission snatches or jams as you try to engage a gear, it means that there might be air in the circuit. Contact your Ducati Dealer or authorised Service Centre to have the system inspected and air drained out.

Attention

Clutch fluid level will increase as clutch plate friction material wears down. Do not exceed the specified level (3 mm (0.12 in) above the minimum level).

Checking brake pads for wear

Check brake pads wear through the inspection hole in the callipers. Change both pads if friction material thickness of even just one pad is about 1 mm (0.04 in).

Attention

Friction material wear beyond this limit would lead to metal support contact with the brake disc thus compromising braking efficiency, disc integrity and rider safety.

Important

Have the brake pads replaced at a Ducati Dealer or authorised Service Centre.

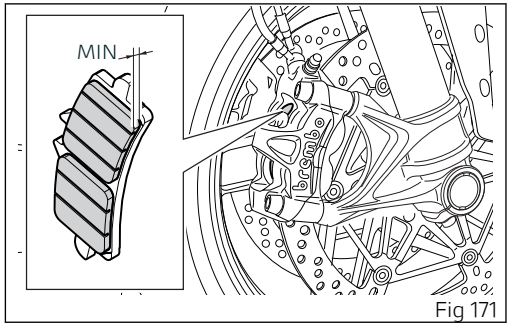

Fig 171

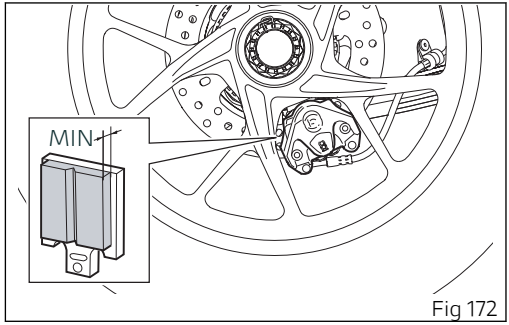

Fig 172

Charging the battery

Preparation

Before charging the battery, it is best to remove it from the motorcycle.

Removing the battery

Loosen the four screws (1), collect the relevant washers and remove tank cover (2).
Loosen the two side (3) and upper (5) screws retaining the ignition switch cover (4).

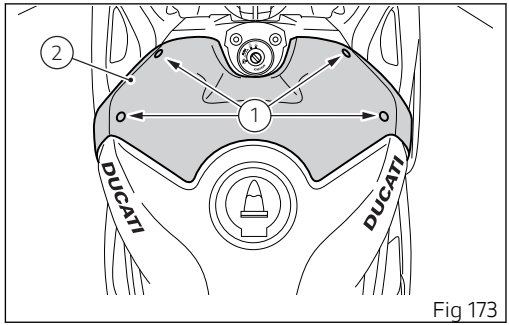

Fig 173

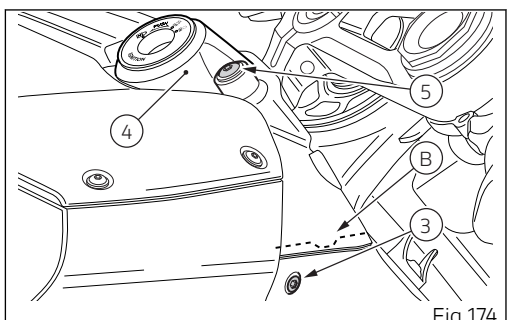

Fig 174

Slide out the ignition switch cover (4) from the rear and from upwards, paying attention to the inner tabs (A) connected to the side fairing, positioned on both sides.
Loosen screw (6), slide out cover (7) fastening the battery and slide it from the upper side.

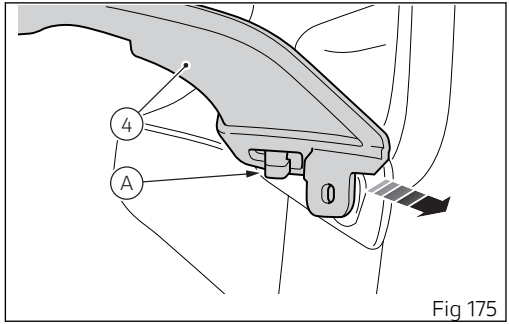

Fig 175

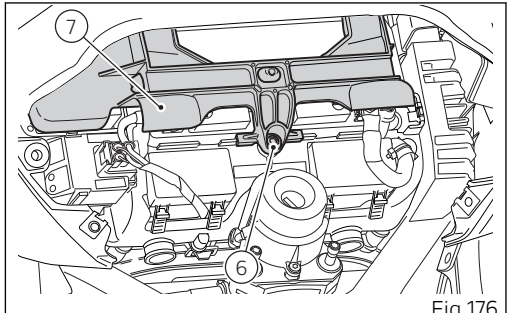

Fig 176

Always starting from the negative terminal (-), loosen the screws (8).
Remove the negative cable (9) and engine ground cable (10) from the negative terminal.
Remove the positive cable (11) and ABS positive cable (12) from the positive terminal.
Remove the battery from its seat.

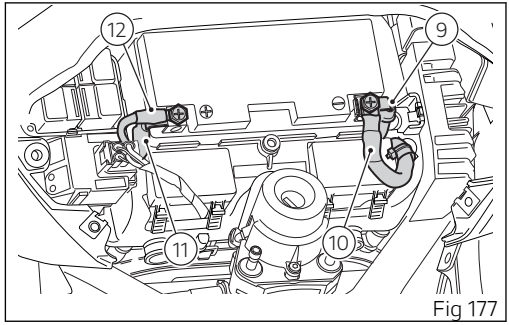

Fig 177

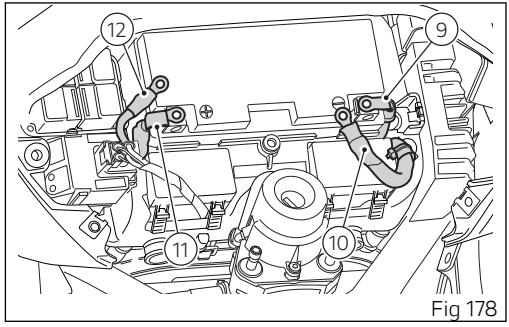

Fig 178

Refitting the battery

Position the battery in its seat.
Lay down the ABS positive cable (12), onto positive cable (11) and start screw (8) on these cables.
Lay down the engine ground cable (10), onto negative cable (9) and start screw (8) on these cables.
Tighten the terminal retaining screws (8).
Apply grease around the battery terminals to prevent oxidation.
Orient the cables as indicated.

Attention

The battery gives off explosive gases; never cause sparks or allow naked flames and cigarettes near the battery. When charging the battery, ensure that the working area is properly ventilated.

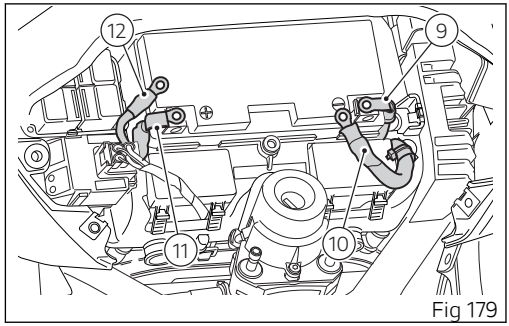

Fig 179

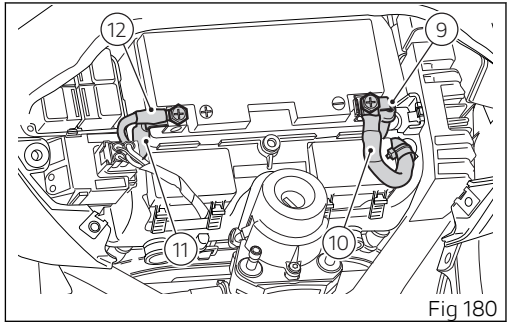

Fig 180

Position the cover (7) fastening the battery; tighten the screw (6).
Position the ignition switch cover (4), operating from the front and paying attention to the inner tabs (B) connected to the side fairing, positioned on both sides.
Tighten the two side (3) and upper (5) screws retaining the ignition switch cover (4).

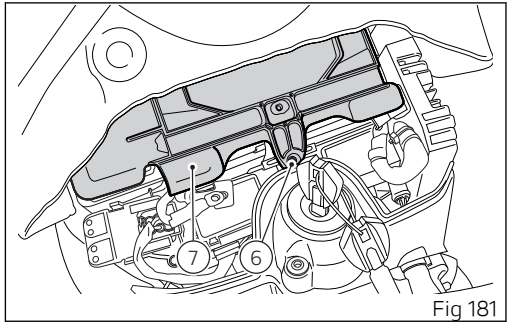

Fig 181

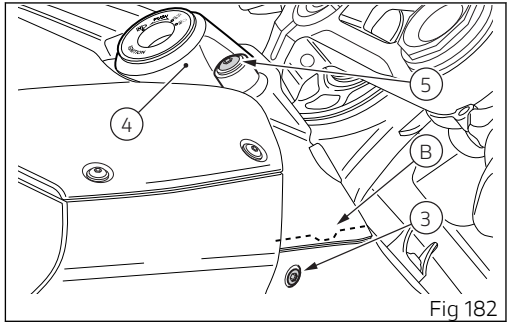

Fig 182

Charge the battery in a ventilated room.
Connect the battery charger leads to the battery terminals: the red one to the positive terminal (+), the black one to the negative terminal (-).
Ducati disclaims any liability deriving from the use of non-original Ducati chargers or maintainers.
It is recommended to use the Ducati dedicated battery charge maintainer (Battery Maintenance Kit part no. 69928471A (Europe), part no. 69928471AW (Japan), 69928471AX (Australia), 69928471AY (UK), 69928471AZ (USA), available from our sales network), and to operate as described in the sub-section "Maintaining the battery charge".

Attention
Keep the battery out of the reach of children.

Attention
Make sure the charger is OFF when you connect the battery to it, or you might get sparks at the battery terminals that could ignite the gases inside the cells. Always connect the red positive (+) terminal first.

Attention
Should it be impossible to start the vehicle due to a completely flat battery, it is not permitted to start the bike by connecting an external starter or and external battery in parallel.
The charging system, indeed, is not designed to ensure a correct supply voltage for the engine electronics (including ignition/injection system) with a completely flat battery.
This could lead to a serious functional problem.
Please, replace the battery or recharge it, and check it before using the bike.

Attention
Do not push start the bike.

Fit the tank cover (2) and tighten the four screws (1).

Storing the motorcycle

If the motorcycle is not used for a long time (e.g. 30 consecutive days), it is advisable to connect the battery charger/charge maintainer using the connection cable through the diagnostic socket. The details are described in “Maintaining battery charge”.

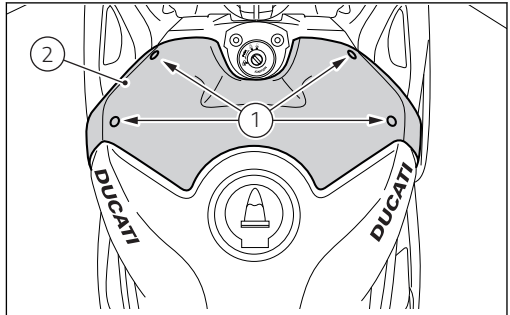

Fig 183

Checking drive chain tension

Important

Have chain tension adjusted by a Ducati Dealer or authorised Service Centre.

Make the rear wheel turn until you find the position where chain is tightest. Set the motorcycle on the side stand. With just a finger, push down the chain at the point of measurement and release.
Measure the distance (A) between the centre of the chain pins and the plastic section of the chain sliding shoe. It must be: A = (21 ÷ 23) mm (0.83 ÷ 0.90 in).

Important

This only applies to the motorcycle STANDARD settings, available upon delivery.

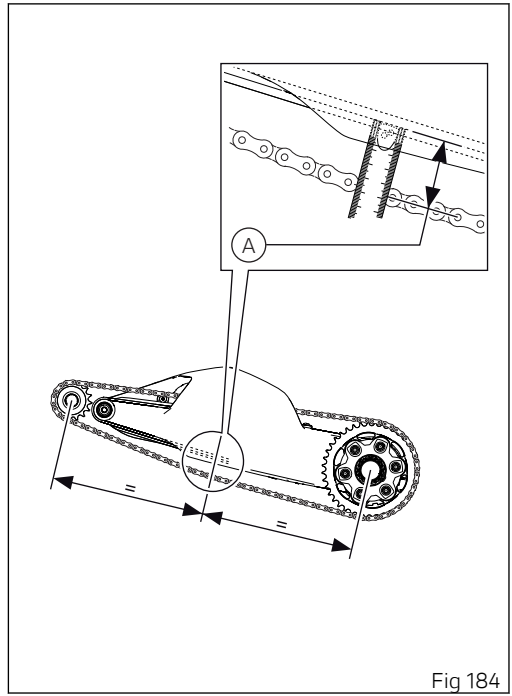

Fig 184

Attention

Correct tightening of swinging arm screws (1) is critical to rider safety.

Important

Improper chain tension will lead to early wear of transmission parts.

Important

To ensure the best performance and long life of the chain, please follow the information related to chain cleaning, lubrication, inspection and tensioning.

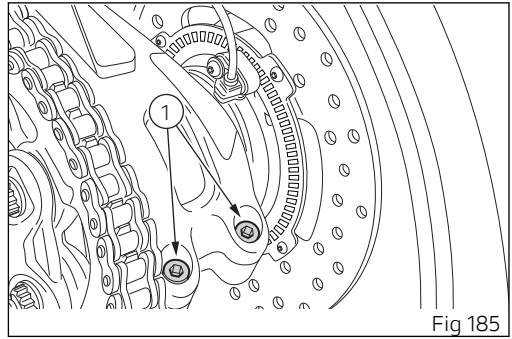

Fig 185

Lubricating the drive chain

Important

Have drive chain cleaned by a Ducati Dealer or authorised Service Centre.

Attention

Carry out these inspection operations with the engine off, the vehicle at a standstill, on a flat ground and on the stand.

Cleaning

Before proceeding with the chain lubrication it is important to correctly wash and clean it.
The chain cleaning is extremely important for its duration. In fact, it is necessary to remove any mud, soil, sand or dirt from the chain first using a soft damp cloth (1) to soften the most resistant dirt and then with a jet of water and then dry it immediately using compressed air at a distance of at least 30 cm (11.81 in).

Checking the chain

The chain fitted on your motorcycle has O-rings that keep dirt out of and lubricant inside the sliding parts. Check the chain for wear by checking the links at the points indicated (2).

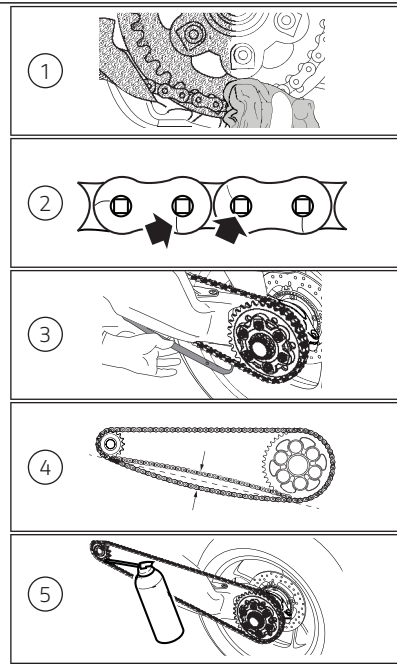

Fig 186

Attention

Avoid the use of steam, fuel, solvents, hard brushes or other methods that could damage the O-rings; also avoid direct contact with the battery acid as it could cause mini cracks in the links as shown in the figure.

Attention

In particular, in case of Off-Road use of the bike, it is possible that excessive wear of the links occurs due to the contact with the chain sliding shoe; friction could in fact cause the chain to overheat, altering the heat treatment of the links and making them particularly fragile.

Checking the sliding shoe

Check the wear of the sliding shoe (3) and, if necessary, contact a Ducati Dealer or Authorised Service Centre.

Checking the tension

Check the chain tension (4) as indicated in the sub-section “Checking the drive chain tension”.
Have the chain tension adjusted by a Ducati Dealer or authorised Service Centre.

Lubrication

Important

Have drive chain cleaned by a Ducati Dealer or authorised Service Centre.

Attention

Use SHELL Advance Chain to lubricate the chain; the use of non-specific lubricants could damage the O-rings and therefore the entire drive system.

It is recommendable to lubricate the chain without waiting for it to cool down after using the motorcycle, so that the new lubricant can penetrate better between the inner and outer links and be more effective in its protective action.

Place the bike on the rear paddock stand. Make the rear wheel turns fast in the opposite direction to the direction of travel.

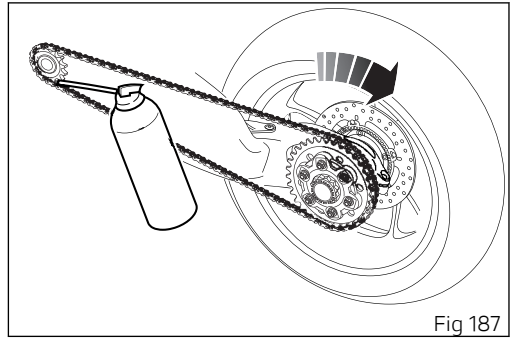

Fig 187

Apply the lubricant jet (1) inside the chain between the inner and outer links, in point (2) immediately before the engagement point on the sprocket.

Due to the centrifugal force, the lubricant, made fluid by the solvents contained in the spray, will expand in the working area between the pin and the bush, ensuring perfect lubrication.

Repeat the operation by aiming the lubricant jet to the central part (5) of the chain so as to lubricate the rollers (4), and to the outer plates (6) as shown in the figure.

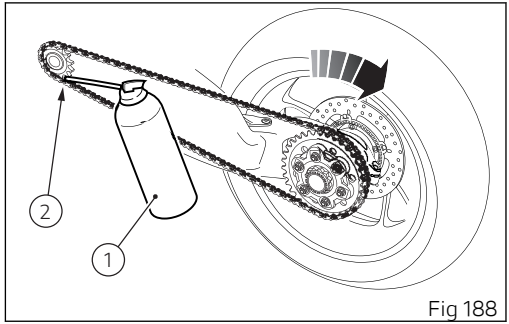

Fig 188

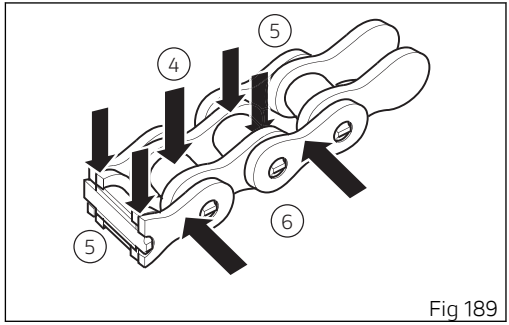

Fig 189

After lubrication, wait 10-15 minutes to allow the lubricant to act on the internal and external surfaces of the chain and then remove the excess lubricant with a clean cloth.

Important

Do not use the motorcycle immediately after lubricating the chain as the lubricant, still fluid, would be centrifuged outwards causing possible soiling of the rear tyre or the rider's footpeg.

Important

Check the chain often, taking care to lubricate it, as also indicated in the table below: at least every 1000 km (621 mi) or more frequently (about every 400 km (248 mi)) when using the bike with high outside temperatures (40°C) or after long travels on the highway at high speed.

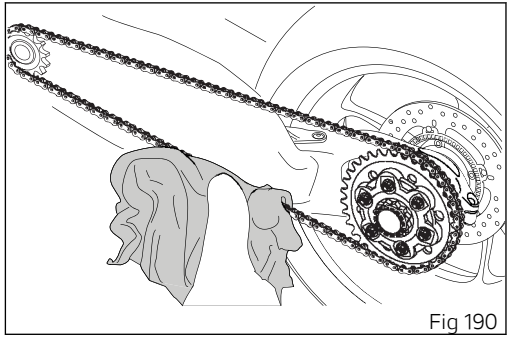

Fig 190

Replacing the high and low beam bulbs

The whole front LED headlight assembly is maintenance-free. Figure shows the locations of the high beam (HI), low beam (LO) and parking lights (1). Have the lights replaced at a Ducati Dealer or authorised Service Centre.

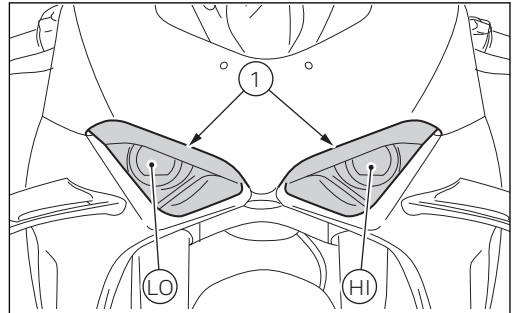

Fig 191

Rear turn indicators

LED turn indicator lights are maintenance-free.

Aligning the headlight

Check correct headlight aiming. Position the motorcycle 10 m (32.8 ft) from a wall or a screen, the motorcycle must be perfectly upright with the Tyres inflated to the correct pressure and with a rider seated, perfectly perpendicular to the longitudinal axis. On the wall or surface, draw a horizontal line at the same height from the ground as the centre of the headlight and a vertical line aligned with the longitudinal axis of the motorcycle. If possible, perform this check in dim light. Switch on the low beam and adjust right and left beams. The height of the upper limit between the dark area and the lit area must not be more than 9/10 of the height from the ground of the headlight centre.

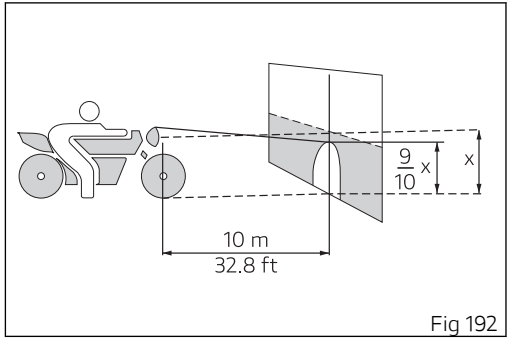

Fig 192

Note

This is the procedure specified by Italian regulations for checking the maximum height of the light beam. Please adapt said procedure to the provisions in force in your own country.

To align the headlight beam, turn the screws (1) and (2) located at the front of the vehicle, on both sides.

Screw (1), positioned on the left side, acts on the high beam:

- turn clockwise to lower the light beam;
- turn counter clockwise to raise the light beam.

Screw (2), positioned on the right side, acts on the low beam:

- turn clockwise to lower the light beam;
- turn counter clockwise to raise the light beam.

Attention

The headlight might fog up if the motorcycle is used under the rain or after washing. Switch headlight on for a short time to dry up any condensate.

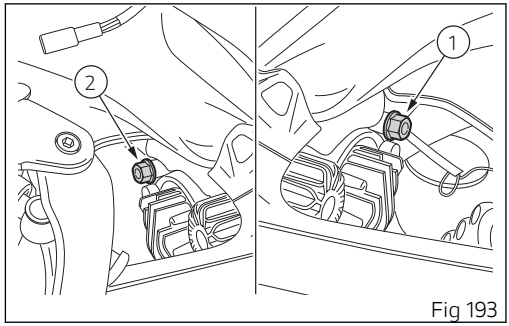

Fig 193

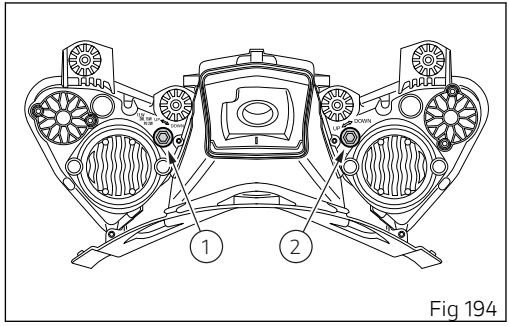

Fig 194

Adjusting the rear-view mirrors

Manually adjust the rear-view mirror by pushing at point (A).

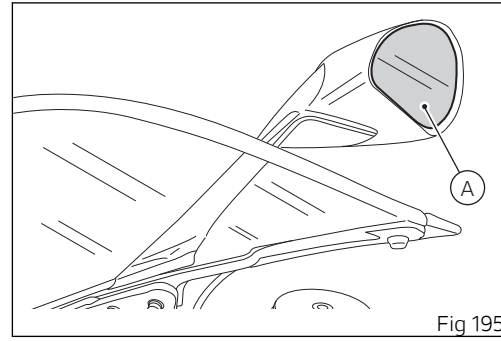

Fig 195

Tubeless tyres

Check the tyre pressure values referring to chapter “Tyres” in the “Technical specifications” section.

Tyre repair or change (Tubeless tyres)

In the event of a tiny puncture, tubeless tyres will take a long time to deflate, as they tend to keep air inside. If you find low pressure on one tyre, check the tyre for punctures.

Attention

Punctured tyres must be replaced. Replace the tyres with recommended standard tyres only. Be sure to tighten the valve caps securely to avoid leaks when riding. Never use tube type tyres. Failure to heed this warning may lead to sudden tyre bursting and to serious danger to rider.

After replacing a tyre, the wheel must be balanced.

Attention

Do not remove or shift the wheel balancing weights.

Note

Have the tyres replaced at a Ducati Dealer or authorised Service Centre. Correct removal and installation of the wheels is essential. Some parts of the ABS (such as sensors and phonic wheels) are mounted to the wheels and require specific adjustment.

Minimum tread depth

Measure tread depth (S) at the point where tread is most worn down: it should not be less than 2 mm (0.08 in), and in any case not less than the legal limit.

Important

Visually inspect the tyres at regular intervals for detecting cracks and cuts, especially on the side walls, bulges or large spots that are indicative of internal damage. Replace them if badly damaged. Remove any stones or other foreign bodies caught in the tread.

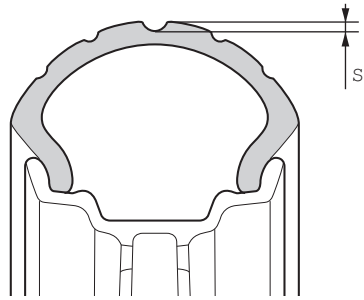

Fig 196

Check engine oil level

Engine oil level can be checked through the sight glass (1) located on the left side of the engine block. Oil level should be between the marks on the sight glass. If the level is low, top up with engine oil. Remove the oil filler cap (2) located on the right side of the vehicle and top up until the oil reaches the required level. Refit the filler plug (2).
Ducati prescribes the only use of SAE 15W-50/JASO MA2 oil and recommends the use of Shell Advance 4T Ultra 15W-50 oil (JASO: MA2 and API: SN).

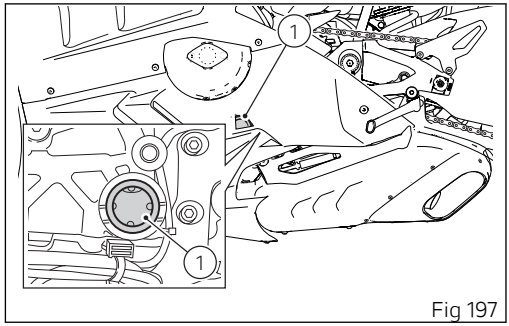

Fig 197

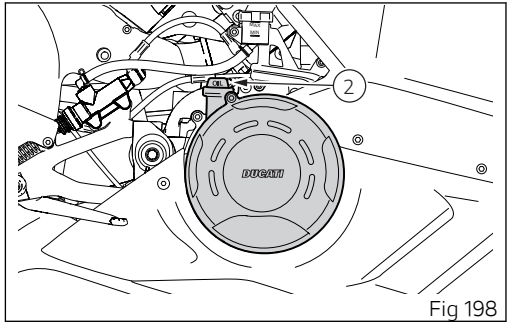

Fig 198

Important

UK VERSION: Ducati recommends you use Shell Advance DUCATI 15W-50 Fully Synthetic Oil.

Important

Engine oil and oil filters must be changed by a Ducati Dealer or authorised Service Centre at the intervals specified in the scheduled maintenance chart reported in the Warranty Card.

To check the oil level correctly, carefully follow the instructions below.
1) The level should be checked at warm engine, about 15 minutes after the engine has been stopped.

2) Turn off the engine and wait 10\15 minutes to allow the oil to flow completely inside the sump.
3) Position the bike with both wheels on a flat ground and in straight position.
4) Then, check the engine oil through the sight glass.
5) If the oil level is below the middle line between the MIN and MAX marks, add oil until reaching the maximum level indication.

Attention
Never exceed the MAX mark.

Recommendations concerning oil

It is recommended to use oil complying with the following specifications:

- viscosity grade SAE 15W-50;
- standard API: SN;
- standard JASO: MA2.

Attention
UK VERSION: It is recommended to use oil complying with the following specifications:

- viscosity grade SAE 15W-50.

SAE 15W-50 is an alphanumerical code identifying oil class based on viscosity: two figures with a W ("winter") in-between; the first figure indicates oil viscosity at low temperature; the second figure indicates its viscosity at high temperature. API (American standard) and JASO (Japanese standard) standards specify oil characteristics.

Cleaning the motorcycle

To preserve the finish of metal parts and paintwork, wash and clean your motorcycle at regular intervals, anyway according to road conditions. Use specific products only. Prefer biodegradable products. Avoid aggressive detergents or solvents.
Use only water and neutral soap to clean the Plexiglas and the seat.
Periodically clean by hand all aluminium components. Use special detergents, suitable for aluminium parts. Do NOT use abrasive detergents or caustic soda.

Note

Do not use sponges with abrasive parts or steel wool: only use soft cloths.

However, the warranty does not apply to motorcycles whenever poor maintenance status is ascertained.

Important

Do not wash your motorcycle right after use. When the motorcycle is still hot, water drops will evaporate faster and spot hot surfaces.
Never clean the motorcycle using hot or high-pressure water jets.
Cleaning the motorcycle with a high pressure water jet may lead to seizure or serious faults in forks, wheel hubs, electric system, headlight (fogging), fork seals, air inlets or exhaust silencers, with consequent loss of compliance with the safety requirements.
Clean off stubborn dirt or exceeding grease from engine parts using a degreasing agent. Be sure to avoid contact with drive parts (chain, sprockets, etc.).

Rinse with warm water and dry all surfaces with chamois leather.

Attention

Braking performance may be impaired immediately after washing the motorcycle. Never grease or lubricate the brake discs to avoid losing braking power. Clean the discs with an oil-free solvent.

Attention
The headlight might fog up due to washing, rain or moisture. Switch headlight on for a short time to help and dry up any condensate.

Carefully clean the phonic wheels of the ABS in order to ensure system efficiency. Do not use aggressive products in order to avoid damaging the phonic wheels and the sensors.

Attention
Avoid direct contact between instrument panel lens and oils/fuels that may stain or damage it thereby impairing information readability. To clean such parts, do not use alcohol-based detergents, containing solvent or abrasive agents; do not use sponges or cloths featuring hard or rough areas since they might scratch the surface.

Note
Clean instrument panel lens using soft cloths with water and mild soap or detergents specific for cleaning clear plastic parts.

Note
To clean the instrument panel do not use alcohol or its by-products.

Pay special attention when cleaning the wheel rims since they have parts in machined aluminium; clean and dry them every time you use the vehicle.

Important
To clean and lubricate the drive chain, refer to the paragraph “Lubricating the drive chain”.

Important
Composite components, particularly structural components designed for high-temperature applications (e.g. swinging arm), are by their very nature subject to matrix colour changes due to time, exposure to atmospheric agents and/or heat sources. Such components can therefore change their colouring and/or general appearance over time and such changes are not an indication of non-conformity or degradation of the material and/or product and/or component, nor can such a change be considered an aesthetic defect (being a peculiar characteristic of the material), nor a structural defect (as in no way it compromises the functionality of the component).

Cleaning and replacing the spark plugs

Spark plugs are essential to smooth engine running and should be checked at regular intervals.
Have the spark plug replaced by a Ducati Dealer or an authorised Service Centre.

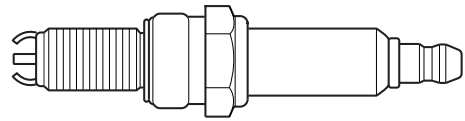

Fig 199

Storing the motorcycle

If the motorcycle is to be left unridden over long periods, it is advisable to carry out the following operations before storing it away:

- clean the motorcycle;
- empty the fuel tank;
- place the motorcycle on a service stand;
- disconnect, remove the battery and periodically charge it using the battery maintainer;
- protect the motorcycle with a suitable canvas. This will protect paintwork and let condensate breathe out. The canvas is available from Ducati Performance.

Important notes

Laws in some countries set certain noise and pollution standards.
Periodically carry out the required checks and renew parts as necessary, using Ducati original spare parts, in compliance with the regulations in the country concerned.

Various electronic components of your vehicle have data memories that temporarily or permanently store technical information on the status, events and faults of the vehicle.
In general, this information documents the status of a component, module, system or environment.

- Operating status of system components (e.g. emission control system).
- Status messages of the vehicle and its components (e.g. wheel rotation speed, engine rpm, engaged gear, etc.)
- Malfunctions and faults of important system components (e.g. lights, brakes, etc.)
- Vehicle response in particular riding situations (e.g. traction control system, etc.)
- Environmental conditions (e.g. temperature, etc.)

These data are always of a technical nature and are used to detect and correct faults and optimise vehicle functions.
During service operations such as repairs, maintenance activities, operations under warranty, and quality assurance, service network personnel (including manufacturers) can read this technical information from the event and fault data memory using special diagnostic tools. Once the fault has been eliminated, it is possible to progressively delete or overwrite the information in the fault memory.
Vehicle data are collected as a result of a service requested by the Customer or provided under a contract (on the vehicle).
Within the scope of these services, personal data are processed in compliance with current legislation on data protection, based on a legitimate interest of Ducati to ensure increasingly efficient assistance, and finally to comply with legal obligations (e.g. information obligations on repairs and maintenance). If necessary, personal data are read and used in combination with the vehicle identification number.
Our control units do not collect geolocation data.

Vehicle transport

Before transporting the motorcycle using another vehicle, follow the safety instructions below.

1) Remove all loose objects and accessories from the vehicle;
2) Align the front wheel straight in the riding direction and lock it properly to prevent any movement;
3) Engage the first gear;
4) Use the anchoring straps and apply them to strong components (e.g. frame) and NOT to the handlebar (or handlebars, where present) or to components that could break (e.g. handgrips, rear-view mirrors, etc.);
5) The straps or ropes must NOT rub against any painted motorcycle components;
6) The suspensions, if possible, must be in a partially compressed position so as to allow less movement of the vehicle with respect to the road surface during transport.

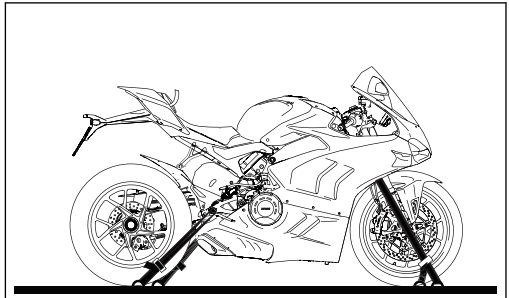

Fig 200

Attention

Do NOT attach the ropes to the handlebars.

Scheduled maintenance chart

Scheduled maintenance chart: operations to be carried out by the dealer

Attention
This scheduled maintenance chart is designed for a road use of the Panigale V4. If it is used on the track, even if not during sport competitions, all parts of the motorcycle are more stressed so the routine maintenance operations must be carried out more frequently than indicated.

Attention
Please contact a Ducati Dealer or authorised Service Centre where you can receive customised service advice according to the sport use you make of your Panigale V4.

	First Service 1000 *	Oil Service *	Desmo Service *	Annual Service *
Reading of the error memory with DDS 3.0 and check of technical updates and recall campaigns on DCS	•	•		12
Change engine oil and filter	•	•		12
Check and clean air filter		•		12
Change air filter			•	

	First Service 1000 *	Oil Service *	Desmo Service *	Annual Service *	
Check and/or adjust valve clearance				•	
Check secondary air reeds (if any)				•	
Change spark plugs				•	
Change coolant				•	48
Reset the variable-length intake manifold system (VIS) using DDS 3.0			•		
Change front fork fluid					36
Visual check of the front fork and rear shock absorber seals	•	•			12
Check brake and clutch fluid level	•	•			12
Change brake and clutch fluid					24
Check front and rear brake disk and pad wear		•			12
Check the proper tightening of the front and rear brake calliper bolts and the front brake disc bolts		•			12
Check rear brake disk screw tightening (by removing the rear wheel shaft in case of brake disk retaining screws requiring the use of hexagon wrench)			•		
Check front and rear wheel nuts and rear sprocket nut tightening		•			12

	First Service 1000 *	Oil Service *	Desmo Service *	Annual Service *
Check the tightening of frame fasteners to engine, swinging arm and rear shock absorber		•		12
Check the tightening fastening the RH tripod to the rear bank			•	
Check wheel hub bearings		•		12
Check the cush drive damper on rear sprocket and lubricate the rear wheel shaft			•	
Check wear of chain, front and rear sprocket, and final drive chain elongation, tension and lubrication. Detected elongation value:_____ (mm) **Note** It is recommended not to exceed 20,000km/12,000mi before replacing the final drive chain kit.	•	•		12
Check clearance of steering tube bearings		•		12
Check the freedom of movement and tightening of the side stand	•	•		12
Check that all gaiters and flexible hoses in view (e.g. fuel, brake and clutch hoses, cooling system, bleeding, drainage, etc.) are not cracked, are properly sealing and positioned	•	•		12
Check free play of rear brake lever and lubricate the levers at the handlebar and pedal controls	•	•		12
Check tyre pressure and wear	•	•		12

	First Service 1000 *	Oil Service *	Desmo Service *	Annual Service *
Check the operation of all electric safety devices (clutch and side stand sensor, front and rear brake switches, engine kill switch, gear/neutral sensor)	•	•		12
Check lighting devices, turn indicators, horn and controls operation	•	•		12
Exhaust valve Bowden cable adjustment with DDS 3.0	•	•		12
Final test and road test of the motorcycle, testing safety devices (e.g. ABS and DTC), electric fans and idling	•	•	•	12
Visually check the coolant level and sealing of the circuit	•	•	•	12
Soft cleaning of the vehicle, record the service coupon and warning light turning off on the instrument panel using the DDS 3.0 and fill out that the service was performed in on-board documentation (Service Booklet)	•	•	•	12

* The First Service 1000 must be carried out after the first 1,000 km/600 mi;
* The Oil Service must be carried out every 15,000 km / 9,000 mi;
* The Desmo Service must be carried out every 24,000km / 15,000 mi;
* The Annual Service must be carried out every 12 months.

Scheduled maintenance chart: operations to be carried out by the customer

Important

Using the motorcycle under extreme conditions, such as very damp and muddy roads or dusty and dry environment, could cause above-average wear of components like the drive system, the brakes or the air filter. If the air filter is dirty, the engine could get damaged. Therefore, this might translate in required service or replacement of the wear parts earlier than specified in the scheduled maintenance chart.

List of operations and type of intervention [set mileage (km/mi) or time interval *]	Km. x1000	1
	mi. x1,000	0.6
	Months	6
Check engine oil level		●
Check brake and clutch fluid level		●
Check tyre pressure and wear		●
Check the drive chain tension and lubrication. If necessary, contact your dealer to adjust components.		●
Check chain and sprocket for wear. If necessary, contact your dealer to replace components.		●
Check brake pads. If necessary, contact your dealer to replace components.		●

* Service operation to be carried out in accordance with the specified distance or time intervals (km, miles or months), whichever occurs first.

Technical data

Weights

Overall weight (in running order with 90% of fuel - 44/2014/EU Annex XI): 198 kg (436.5 lb).
Overall weight (without fluids and battery): 175 kg (385.8 lb).
Maximum allowed weight (carrying full load): 370 kg (815.7 lb).

Attention

Failure to observe weight limits could result in poor handling and impair the performance of your motorcycle, and you may lose control of the motorcycle.

Dimensions

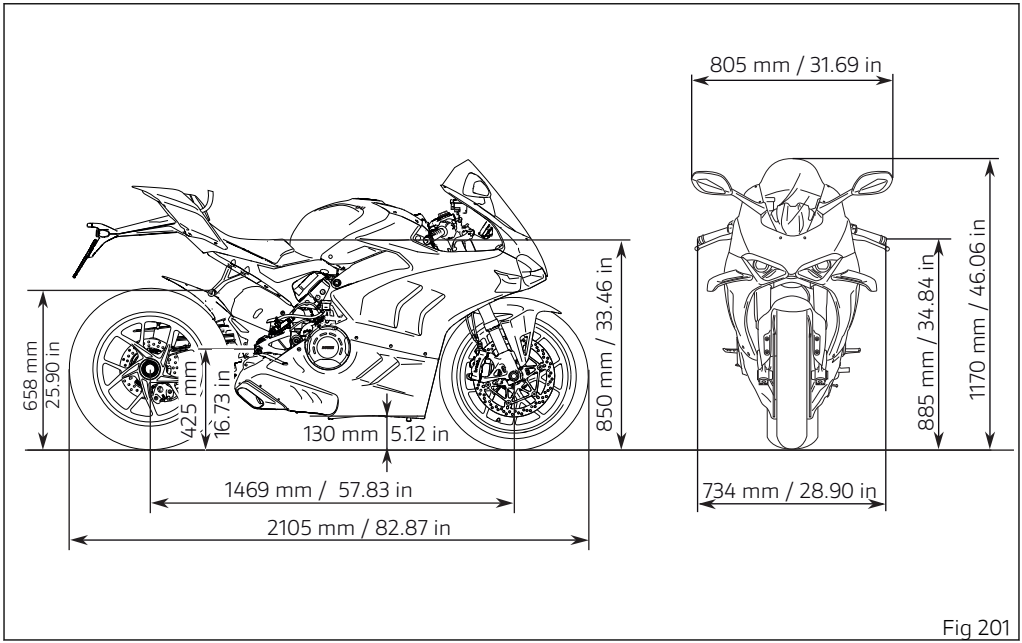

Fig 201

"Fuel, lubricants and other fluids"

TOP-UPS	TYPE	
Fuel tank, including a reserve of 4.5 litres (0.99 UK gal)	Ducati recommends SHELL V-Power unleaded premium fuel with a minimum of octane rating of RON 95	17 litres (3.74 UK gal)
Oil sump and filter	Ducati prescribes the only use of SAE 15W-50/JASO MA2 oil and recommends the use of Shell Advance 4T Ultra 15W-50 oil (JASO: MA2 and API: SN). SHELL Advance DUCATI 15W-50 Fully Synthetic Oil (UK VERSION)	3.4 litres (0.75 UK gal)
Front/rear brake and clutch circuits	DOT 4	-
Protectant for electric contacts	Protective spray for electric systems	-
Front fork		84 mm (3.31 in)
Cooling circuit	ENI Agip Permanent Spezial antifreeze (do not dilute, use pure)	2.05 litres (0.45 UK gal)

Important

Do not use any additives in fuel or lubricants. Using them could result in severe damage of the engine and motorcycle components.

Attention

The motorcycle is only compatible with fuel having a maximum content of ethanol of 10% (E10). Using fuel with ethanol content over 10% is forbidden. Using it could result in severe damage of the engine and motorcycle components. Using fuel with ethanol content over 10% will make the warranty null and void.

Important

These references identify the fuel recommended for this vehicle, as specified by the European Regulation EN228.

Engine

Desmosedici Stradale: V4 90°, counter-rotating crankshaft, Desmodromic timing system, 4 valves per cylinder, liquid cooling.

Lubrication: one trochoid oil delivery pump with integrated by-pass valve and three scavenge pumps (two trochoid pumps and one gear pump). Oil cooler.

Bore: 81 mm (3.19 in).
Stroke: 53.5 mm (2.1 in).

Total displacement: 1103 cu. cm (67.31 cu. in).
Compression ratio: 14.0 ± 0.5:1.

Maximum power at crankshaft (EU) Regulation no. 134/2014, Annex X, kW/HP:

158.5 kW/215.5 HP at 13000 rpm.
Max. power at crankshaft Regulation (EU) no. 134/2014 Annex X kW, for France version only:

84 kW/114.2 HP at 8500 rpm.

Maximum torque at crankshaft (EU) Regulation no. 134/2014 Annex X:

123.6 Nm/12.6 Kgm at 9500 rpm.
Max. torque at crankshaft Regulation (EU) no. 134/2014 Annex X, for France version only:

103.1 Nm/10.5 Kgm at 6250 rpm.

Maximum rpm: 14500 rpm / 15000 rpm (6th gear).

Note

The engine control unit disables the 2 rear bank cylinders when engine is idling and the throttle twistgrip is fully released. This disabling is only implemented when some conditions are verified and namely depending on the engine temperature, gear engaged and clutch lever position (that must be completely pulled unless gear is in Neutral). This strategy ensures advantages in terms of fuel economy and rider's comfort because of less heat.

Important

Do not exceed the specified rpm limits in any running conditions.

Note

The indicated power/torque values have been measured with a static test bench according to type-approval standards and match with the data detected during type-approval process; they are indicated in the vehicle registration document.

Timing system

Desmodromic, 4 valves per cylinder

Desmodromic timing system

1) Opening (or upper) rocker arm;
2) Opening rocker shim;
3) Closing (or lower) rocker shim;
4) Return spring for lower rocker;
5) Closing (or lower) rocker;
6) Camshaft;
7) Valve.

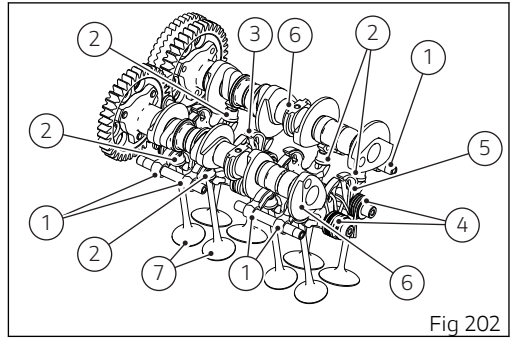

Fig 202

Performance data

Maximum speed in any gear should be reached only after a correct running-in period with the motorcycle properly serviced at the recommended intervals.

Important

Failure to follow these instructions releases Ducati Motor Holding S.p.A. from any liability whatsoever for any engine damage or shorter engine life.

Spark plugs

Make: NGK.
Type: LMDR10A-JS.

Fuel system

Inductive discharge indirect electronic injection, intake system with variable length ducts
Throttle body: Full Ride-by-Wire elliptical (corresponding diameter):
52 mm (2.05 in)
Injectors per cylinder: 2
Fuel supply: 95-98 RON.

Attention

The motorcycle is only compatible with fuel having a maximum content of ethanol of 10% (E10). Using fuel with ethanol content over 10% is forbidden. Using it could result in severe damage of the engine and motorcycle components. Using fuel with ethanol content over 10% will make the warranty null and void.

Brakes

Separate-action anti-lock braking system operated by hall-type sensors mounted to each wheel with phonic wheel detection: ABS can be disabled.

FRONT
Semi-floating drilled twin-disc.
Braking material: stainless steel.
Carrier material: stainless steel.
Disc diameter: 330 mm (12.99 in).
Braking surface: 264 sq. cm (40.92 in^2).
Brake disc thickness: 5 mm (0.2 in).
Disc thickness maximum wear: 4.5 mm (0.18 in).
Hydraulically operated by a control lever on handlebar right-hand side.
Brake calliper make: BREMBO.

Type: Stylema monobloc (R) M4.30, radial mount (ABS Cornering EVO).
Number of pistons per calliper: 4
Friction material: BRM10H.
Master cylinder type: PR16/21 S, self-bleeding.
Front brake master cylinder lever DBC: 21 mm (0.83 in).
Front brake master cylinder diameter: 16 mm (0.63 in).

REAR
With fixed drilled stainless steel disc.
Disc diameter: 245 mm (9.6 in).
Brake disc thickness: 5 mm (0.2 in).
Disc thickness maximum wear: 4.5 mm (0.18 in).
Braking surface: 219 sq. cm (33.94 in^2).
Hydraulically operated by a pedal on RH side.
Brake calliper make: BREMBO.
Number of pistons per calliper: 2.
Cornering ABS EVO.
Friction material: TOSHIBA TT 2172 HH.
Master cylinder type: PS 13.
Master cylinder piston diameter: 13 mm (0.51 in).

Attention

The brake fluid used in the brake system is corrosive.
In the event of accidental contact with eyes or skin, wash the affected area with abundant running water.

Transmission

Hydraulically-controlled slipper/self-servo wet multiplate clutch controlled by the lever on left-hand side of the handlebar.
Drive is transmitted from engine to gearbox primary shaft via spur gears.
Primary drive: 30/54.
Drive ratio: 1.80:1.
6-gear gearbox with Ducati Quick Shift (DQS) up/down EVO2, gear change pedal on left side of motorcycle.

Gearbox output sprocket/rear chain sprocket ratio: 16/41
Total gear ratios:
1st gear 36/15
2nd gear 34/17
3rd gear 33/19
4th gear 32/21
5th gear 30/22

6th gear 27/22

Drive chain from gearbox to rear wheel.
Make: DID 525HV3 KAI ZB
Links: 114

Important
The above gear ratios are the homologated ones and under no circumstances must they be modified.

Attention
If the rear sprocket needs replacing, contact a Ducati Dealer or authorised Service Centre. Incorrect replacement of this component could seriously compromise your safety and cause irreparable damage to the motorcycle.

Frame
Cast monocoque frame in aluminium alloy.
Aluminium alloy rear subframe.
Steering head angle: 24.5°.
Steering angle: 26° LH side / 26° RH side.
Trail: 100 mm (3.93 in).

Wheels
Front

5-spoke, light-alloy cast rim.
Size: MT3.50x17"

Rear

5-spoke, light-alloy cast rim.
Size: MT6.00x17"

Tyres
Tyre pressure

On the road (rider only)
2.3 bar (33.36 psi) (front) - 2.1 bar (30.46 psi) (rear).
On the road (rider + passenger + bags):
2.5 bar (36.26 psi) (front) - 2.9 bar (42.06 psi) (rear).
On track (rider only):
2.3 bar (33.36 psi) (front) - 1.8 bar (26.10 psi) (rear).
As tyre pressure is affected by ambient temperature and altitude variations, you are advised to check and adjust it whenever you are riding in areas where ample variations in temperature or altitude occur.

Attention
Check and set tyre pressure when tyres are cold. To avoid front wheel rim distortion, when riding on bumpy roads, increase tyre pressure by 0.2 ÷ 0.3 bar (2.90÷4.35 psi).

Front

Pirelli Diablo Supercorsa SP "tubeless" radial type.
Size: 120/70 ZR17.

Rear

Pirelli Diablo Supercorsa SP "tubeless" radial type.
Size: 200/60 ZR17.

Suspension

Front

Fully adjustable Showa BPF upside-down fork with chromed steel fork legs.
Stanchion diameter: 43 mm (1.69 in).
Wheel travel: 120 mm (4.72 in).

Rear

Sachs monoshock, with adjustable rebound and compression damping and spring preload.
Wheel travel: 130 mm (5.12 in)
Stroke: 65 mm (2.56 in)
Aluminium single-sided swinging arm

Steering damper

Adjustable Sachs steering damper
Every setting is identified by a "click": set to maximum 14 clicks from the fully open position.

Attention
Beyond such adjustment the steering could be too damped leading to dangerous situations.

Exhaust system

Layout: the exhaust system structure is 4–2–1–2.
Four Lambda sensors and two catalytic converters.

Available colours

Rims: black.
Frame: grey.

Ducati Red colour (Upper and lower fairing, central tank cover, headlight fairing, side body panels, front mudguard, tank, tail guard)
1) Primer (Acriflex) White, SUPPLIER Lechler, CODE L0040652;
2) Ducati Red base coat, SUPPLIER PPG, CODE 473.101;

3) Clear coat Tixo Klarlack 09, SUPPLIER Lechler, CODE 96230.

Dark Stealth colour (Wings)
1) 2K Black primer, SUPPLIER Palinal, CODE 873.A002;
2) Black Stealth base coat, SUPPLIER Palinal, CODE 929.R223;
3) Matt 2K clear coat, SUPPLIER Palinal, CODE 923I. 2176.

Electric system

Basic electric items are:

Dashboard

MAE instrument panel with 5” TFT colour display.

Headlight

Low beam: No. 3 LEDs;
High beam: No. 1 LED;
Parking light / DRL: no. 4 LEDs.

Turn indicators

Front: no.15 LEDs
LED rear turn indicators (Europe version): no.1 LED
BULB rear turn indicators (USA version) type:
RY10W (12V-10W) Amber.

Tail light

Parking light: no.18 LEDs;
LED stop lights: no.18 LEDs.
Number plate light: no.3 LEDs

Battery

YUASA YT7B-BS (12V - 6.5Ah 10HR)

Warning horn.

Stop light switches.
Generator: 14.5 V - 440 W.
ELECTRONIC RECTIFIER, protected by a 30A fuse located on the solenoid starter, next to the battery.
Starter motor: Mitsuba SM18 12V - 0.6 kW

Note
For bulb replacement instructions, please see the paragraph "Replacing the high and low beam bulbs".

Fuses

There are fuses that protect the electric components, located inside the front fuse boxes, and one on the electric solenoid starter. There is a spare fuse in every box.
Refer to the table below to identify the circuits protected by the various fuses and their ratings.
The front left fuse box (A) and the front right one (B) are located above the battery.
To access the fuses, remove the left-hand side fairing.
To expose the fuses, lift the box protective cover.
Mounting position and ampere capacity are marked on box cover.

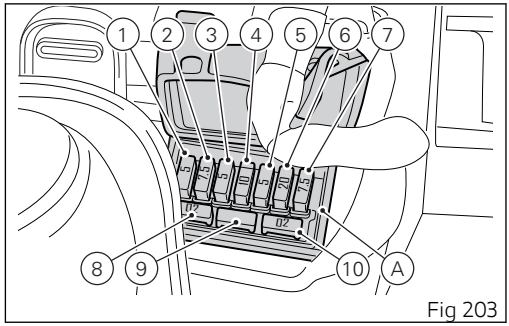

Fig 203

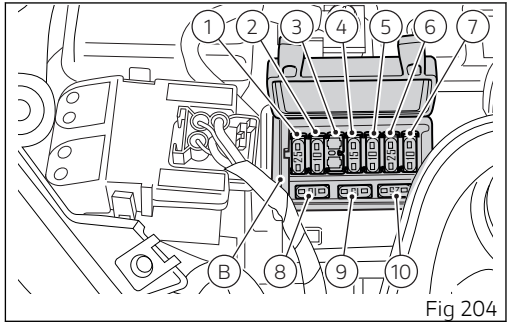

Fig 204

Front left fuse box (A) key		
Pos	El. item	Rat.
1	EMS/ABS/IMU	5 A
2	DASH/BBS/SMEC	7.5 A
3	Front optical unit	5 A
4	SBS	-
5	Accessories	5 A
6	Injection relay	20 A
7	Diagnostics/ Recharge	7.5 A
8	Spare	20 A
9	Spare	15 A
10	Spare	5 A

Front right fuse box (B) key		
Pos	El. item	Rat.
1	EMS powered relays	25 A
2	Fuel pump relay	10 A
3	Starter relay	-

Front right fuse box (B) key		
4	Instrument panel	15 A
5	Black Box System (BBS)	15 A
6	ABS 1	25 A
7	ABS 2	10 A
8	Spare	25 A
9	Spare	15 A
10	Spare	10 A

The main fuse (C) is located on the right side of the fuse box (B Fig 204), on solenoid starter (D).
To reach it, it is necessary to remove the tank cover as described in chapter “Charging the battery” and the protection cap (E). A blown fuse can be identified by breakage of the inner filament (F).

Important

Switch the ignition key to OFF before replacing the fuse to avoid possible short-circuits.

Attention

Never use a fuse with a rating other than specified. Failure to observe this rule may damage the electric system or even cause fire.

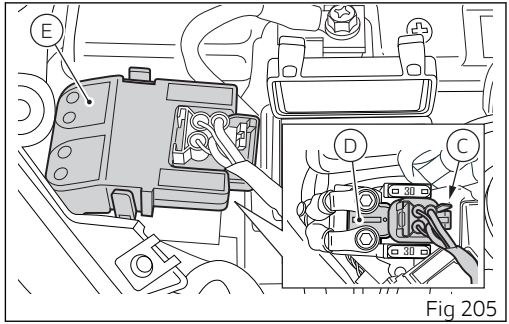

Fig 205

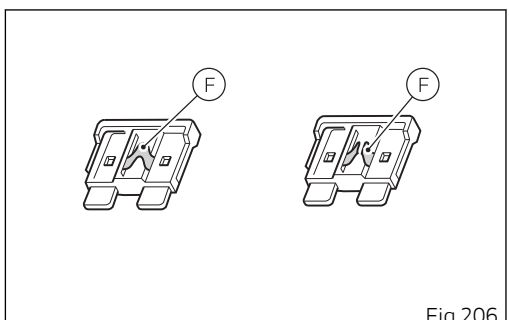

Fig 206

Open source software

Information about open source software

Some vehicle components use open source software. The source code used and information on open source is available online at the following link: https://www.ducati.com/ww/en/home/open-source-software

Declarations of conformity

EU Directive 2014/53/EU

Addresses of radio component manufacturers

All radio components must carry the manufacturer's address according to the provisions of directive 2014/53/EU. For components that, due to their size or nature, cannot be furnished with a sticker, the respective manufacturers' addresses as required by law are listed in the table 2.

Note
Only skilled person can access and install the device.

Table 1

Radio equipment installed in the vehicle	Frequency band	Max. transmission power
Instrument panel	134.6 KHz 119 KHz ÷ 135 KHz	< 66 dBµA/m (10 m)

Ducati Multimedia System (Bluetooth)	2402 ÷ 2480 MHz	4.4mW
Antitheft	433.92MHz (±75KHz)	<0.6mA
GPS	1575.4 MHz	

Table 2

Radio equipment installed in the vehicle	Manufacturers' addresses
Instrument panel	**MAE** Via Presolana 31/33 24030 Medolago (Bergamo), Italy
Ducati Multimedia System (Bluetooth)	**COBO S.p.a.** Via Tito Speri, 10 25024 Leno (BS), Italy
Antitheft	**PATROLLINE** Via Cesare Cantù, 15/C 22031 Albavilla (CO), Italy

GPS	**DANFOSS A/S** 6430 Nordborg Denmark CVR nr.: 20 16 57 15

Simplified EU declaration of conformity

[Austria]
Ihr Fahrzeug ist mit einer Reihe von Funkgeräten ausgestattet. Die Hersteller dieser Funkgeräte erklären, dass diese, wo gesetzlich vorgeschrieben, mit der Richtlinie 2014/53/EU übereinstimmen. Der vollständige Text der EU-Konformitätserklärung ist unter folgender Adresse verfügbar: certifications.ducati.com

[Belgium]
Votre véhicule est équipé d'une série d'appareillages radio. Les constructeurs de ces appareillages radio déclarent que ces derniers sont conformes à la directive 2014/53/UE lorsque la loi le requiert. Le texte complet de la déclaration de conformité UE est disponible à l'adresse suivante : certifications.ducati.com

[Bulgaria]
Твоят мотоциклет е оборудван с различна по вид радиоапаратура. Производителите на тази радиоапаратура декларират, че тя съответства на Директива 2014/53/ЕС, съгласно изискванията по закон. Пълният текст на декларацията за съответствие ЕС, ще намерите на следния адрес: certifications.ducati.com

[Cyprus]
Το όχημά σας εξοπλίζεται με μια σειρά από ραδιοσυσκευές. Οι κατασκευαστές των συσκευών αυτών δηλώνουν ότι οι συσκευές συμμορφώνονται με την οδηγία 2014/53/ΕΕ, όπου απαιτείται από το νόμο. Το πλήρες κείμενο της δήλωσης συμμόρφωσης ΕΕ είναι διαθέσιμο στη διεύθυνση: certifications.ducati.com

[Czech Republic]
Vaše vozidlo je vybaveno řadou rádiových zařízení. Výrobci těchto radio zařízení, prohlašují, že zařízení jsou v souladu se směrnicí 2014/53/EU, pokud to vyžaduje zákon. Úplné znění prohlášení o shodě EU je k dispozici na internetových stránkách: certifications.ducati.com

[Germany]

Ihr Fahrzeug ist mit einer Reihe von Funkgeräten ausgestattet. Die Hersteller dieser Funkgeräte erklären, dass diese, wo gesetzlich vorgeschrieben, mit der Richtlinie 2014/53/EU übereinstimmen. Der vollständige Text der EU-Konformitätserklärung ist unter folgender Adresse verfügbar: certifications.ducati.com

[Denmark]
Dit køretøj er udstyret med et udvalg af radioudstyr. Producenterne af dette radioudstyr erklærer, at dette udstyr overholder direktiv 2014/53/EU, hvis det kræves i henhold til loven. Den komplette tekst af EU-overensstemmelseserklæringen findes på følgende webadresse: certifications.ducati.com

[Estonia]
Teie sõiduk on varustatud raadioseadmete seeriaga. Selle raadioseadme tootjad kinnitavad, et see seade vastab direktiivile 2014/53/EÜ, kui seadus seda nõuab. EÜ vastavusdeklaratsiooni terviktekst on saadaval järgmisel veebisaidil: certifications.ducati.com

[Spain]
Su vehículo está equipado con una serie de equipos de radio. Los fabricantes de dichos equipos de radio declaran su conformidad con la directiva 2014/53/UE, como requiere la ley. El texto completo de la declaración de conformidad UE está disponible en el siguiente sitio: certifications.ducati.com

[Finland]
Ajoneuvossasi on radiolaitteita. Näiden radiolaitteiden valmistajat vakuuttavat, että laitteet vastaavat direktiiviä 2014/53/EU lain edellyttämällä tavalla. EU-vaatimustenmukaisuusvakuutuksen täydellinen teksti on saatavilla seuraavasta osoitteesta: certifications.ducati.com

[France]
Votre véhicule est équipé d'une série d'appareillages radio. Les constructeurs de ces appareillages radio déclarent que ces derniers sont conformes à la directive 2014/53/UE lorsque la loi le requiert. Le texte complet de la déclaration de conformité UE est disponible à l'adresse suivante : certifications.ducati.com

[United Kingdom]
Your vehicle is equipped with a range of radio equipment. The manufacturers of this radio equipment declare that these equipment complies with Directive 2014/53/EU where required by law. The complete text of the EU declaration of conformity is available at the following web address: certifications.ducati.com

[Greece]
Το όχημά σας εξοπλίζεται με μια σειρά από ραδιοσυσκευές. Οι κατασκευαστές των συσκευών αυτών δηλώνουν ότι οι συσκευές συμμορφώνονται με την οδηγία 2014/53/ΕΕ, όπου απαιτείται από το νόμο. Το πλήρες κείμενο της δήλωσης συμμόρφωσης ΕΕ είναι διαθέσιμο στη διεύθυνση: certifications.ducati.com

[Croatia]
Vaše vozilo je opremljeno nizom radio uređaja. Proizvođači ovih radio uređaja tvrde da su uređaji u skladu s Direktivom 2014/53/UE ako je propisano zakonom. Cjelokupan tekst deklaracije o sukladnosti dostupan je na: certifications.ducati.com

[Hungary]
Járműved egy sor rádió készülékkel van felszerelve. Ezeknek a rádióberendezéseknek a gyártói kijelentik, hogy a készülékek megfelelnek a 2014/53/EU irányelvnek, ahol ezt a törvény megköveteli. Az EU megfelelőségi nyilatkozat teljes szövege az alábbi címen érhető el: certifications.ducati.com

[Ireland]
Your vehicle is equipped with a range of radio equipment. The manufacturers of this radio equipment declare that these equipment complies with Directive 2014/53/EU where required by law. The complete text of the EU declaration of conformity is available at the following web address: certifications.ducati.com

[Italy]
Il tuo veicolo è dotato di una serie di apparecchiature radio. I costruttori di queste apparecchiature radio dichiarano che esse sono conformi alla direttiva 2014/53/UE laddove richiesto per legge. Il testo completo della dichiarazione di conformità UE è disponibile al seguente indirizzo: certifications.ducati.com

[Lithuania]
Jūsų transporto priemonėje įdiegta daug įvairios radijo įrangos. Šios radijo įrangos gamintojai patvirtina, kad ji atitinka 2014/53/ES direktyvos reikalavimus, kaip tai numato galiojantys įstatymai. Visas ES atitikties deklaracijos tekstas pateikiamas svetainėje adresu certifications.ducati.com

[Luxembourg]
Votre véhicule est équipé d'une série d'appareillages radio. Les constructeurs de ces appareillages radio déclarent que ces derniers sont conformes à la directive 2014/53/UE lorsque la loi le requiert. Le texte complet de la déclaration de conformité UE est disponible à l'adresse suivante : certifications.ducati.com

[Latvia]
Jūsu transportlīdzeklis ir aprīkots ar dažādām radioierīcēm. Šo radioierīču ražotājs apliecina, ka ierīces atbilst Direktīvas 2014/53/ES prasībām, ja to paredz attiecīgie tiesību akti. Pilnīgo ES atbilstības deklarāciju skatiet šajā tīmekļa vietnē: certifications.ducati.com

[Malta]
Il-vettura tiegħek hija mgħammra b'firxa ta' tagħmir tar-radju. Il-manufatturi ta' dan it-tagħmir tar-radju jiddikjaraw li dan it-tagħmir jikkonforma mad-Direttiva 2014/53/UE fejn meħtieġ mil-liġi. It-test kollu tad-dikjarazzjoni ta' konformità tal-UE huwa disponibbli fuq l-indirizz tal-web: certifications.ducati.com

[Netherlands]
Uw voertuig is voorzien van diverse draadloze apparatuur. De fabrikanten van deze draadloze apparatuur verklaren dat deze, daar waar dit door de wet voorschreven wordt, overeenstemmen met de richtlijn 2014/53/EU. De volledige tekst van de EU-verklaring van overeenstemming is beschikbaar op het volgende webadres: certifications.ducati.com

[Poland]
Państwa pojazd został wyposażony w szereg urządzeń radiowych. Producenci tych urządzeń radiowych oświadczają, że są one zgodne z dyrektywą 2014/53/UE, tam, gdzie wymaga tego prawo. Pełny tekst deklaracji zgodności UE jest dostępny pod następującym adresem internetowym: certifications.ducati.com

[Portugal]
O seu veículo é dotado de uma série de equipamentos de rádio. Os construtores desses equipamentos de rádio declaram que os mesmos estão em conformidade com a diretiva 2014/53/UE sempre que a lei o determinar. O texto completo da declaração de conformidade UE está disponível no seguinte endereço: certifications.ducati.com

[Romania]
Vehiculul dvs. este dotat cu o serie de aparate radio. Producătorii acestor aparate radio declară că acestea sunt conforme cu directiva 2014/53/UE, dacă legea impune acest lucru. Textul complet al declarației de conformitate UE este disponibil la următoarea adresă: certifications.ducati.com

[Sweden]
Ditt fordon är utrustat med radioutrustning. Radioutrustningens tillverkare förklarar att denna utrustning uppfyller direktiv 2014/53/EU där så lagen kräver det. Fullständig text om EU-försäkran om överensstämmelse finns på följande adress: certifications.ducati.com

[Slovenia]
Vaše vozilo ima tudi vrsto radijske opreme. Proizvajalci eteh radijskih naprav izjavljajo, da so ti v skladu z uredbo 2014/53/UE, kjer zakon to predvideva. Celotno besedilo izjave o skladnosti EU je na voljo na spodnjem naslovu: certifications.ducati.com

[Slovakia]
Vaše vozidlo je vybavené rádiofónnymi zariadeniami. Výrobcovia týchto rádiofónnych zariadení prehlasujú, že tieto zariadenia sú v zhode so smernicou 2014/53/EÚ v rozsahu predpísanom zákonom. Úplný text ES prehlásenia o zhode je k dispozícii na nasledujúcej adrese: certifications.ducati.com

[Turkey]
Aracınız bir dizi radyo ekipmanı ile donatılmıştır. Bu telsiz ekipmanının üreticileri, yasaların gerektirdiği durumlarda bu ekipmanın 2014/53/EU Direktifine uygun olduğunu beyan eder. AB uygunluk beyanının tam metnine aşağıdaki web adresinden ulaşılabilir: Certificates.ducati.com

United States (USA)

“This device complies with Part 15 of the FCC Rules.
Operation is subject to the following two conditions: (1) this device may not cause harmful interference, and (2) this device must accept any interference received, including interference that may cause undesired operation."
“Changes or modifications not expressly approved by the party responsible for compliance could void the user’s authority to operate the equipment.” "NOTE: This equipment has been tested and found to comply with the limits for a Class B digital device, pursuant to Part 15 of the FCC Rules. These limits are designed to provide reasonable protection against harmful interference in a residential installation. This equipment gene rates, uses and can radiate radio frequency energy and, if not installed and used in accordance with the instructions, may cause harmful interference to radio communications. However, there is no guarantee that interference will not occur in a particular installation. If this equipment does cause harmful interfere nee to radio or television reception, which can be determined by turning the equipment off and on, the user is encouraged to try to correct the interference by one or more of the following measures:

- Reorient or relocate the receiving antenna.
- Increase the separation between the equipment and receiver.
- Connect the equipment into an outlet on a circuit different from that to which the receiver is connected.
- Consult the dealer or an experienced radio/TV technician for help."

- RF exposure Information according 2.1091/2.1093 / OET bulletin 65:
Radiofrequency radiation exposure Information: This equipment complies with FCC radiation exposure limits set forth for an uncontrolled environment. This equipment should be installed and operated with minimum distance of 20 cm between the radiator and your body. This transmitter must not be co-located or operating in conjunction with any other antenna or transmitter.
The manufacturers of these radio equipment declare that devices comply with the FCC

DASHBOARD	FCC ID: 2AVGH-DSBV4HTG
Ducati Multimedia System (Bluetooth)	FCC ID: Z64-2564N

Canada

This device contains licence-exempt transmitter(s)/ receiver(s) that comply with Innovation, Science and Economic Development Canada's licence-exempt RSS(s). Operation is subject to the following two conditions:
(1) This device may not cause interference.
(2) This device must accept any interference, including interference that may cause undesired operation of the device.

L'émetteur/récepteur exempt de licence contenu dans le présent appareil est conforme aux CNR d'Innovation, Sciences et Développement économique Canada applicables aux appareils radio exempts de licence. L'exploitation est autorisée aux deux conditions suivantes:
(1) L'appareil ne doit pas produire de brouillage;
(2) L'appareil doit accepter tout brouillage radioélectrique subi, même si le brouillage est susceptible d'en compromettre le fonctionnement.

RF Exposure Information:
This equipment complies with Canada radiation exposure limits set forth for an uncontrolled environment. This equipment should be installed and operated with minimum distance of 20 cm between the radiator and your body.

Déclaration d'exposition aux radiations: Cet équipement est conforme aux limites d'exposition aux rayonnements IC établies pour un environnement non contrôlé. Cet équipement doit être installé et utilisé avec un minimum de 20 cm de distance entre la source de rayonnement et votre corps.

DASHBOARD	IC: 25794-DSBV4HTG
Ducati Multimedia System (Bluetooth)	IC: 4511-2564N

DASHBOARD

South Korea

해당 무선설비는 전파혼신 가능성이 있으므로 인명안전과 관련된 서비스는 할 수 없습니다

R-R-mAe-DSBV4HTG

Ducati Multimedia System (Bluetooth)

Brasil

Este equipamento opera em caráter secundário, isto é, não tem direito a proteção contra interferência prejudicial, mesmo de estações do mesmo tipo, e não pode causar interferência a sistemas operando em caráter primário. Para consultas, visite: www.anatel.gov.br .

ANATEL

09738-21-10873

Japan

当該機器には電波法に基づく、技術基準適合証明等を受けた特定無線設備を装着している。
This equipment contains specified radio equipment that has been certified to the technical regulation conformity certification under the Radio Law.

本無線機器の改造を禁ずる（これに反した場合は当該認証登録番号は無効となる）
This radio device should not be modified (otherwise the granted designation number will become invalid)

South Korea

해당 무선설비는 전파혼신 가능성이 있으므로 인명안전과 관련된 서비스는 할 수 없습니다

R-R-Cbo-1080795

91376391EN

Updated on 04/2023 ED.02

MIX
From responsible sources
FSC™ C110200
FSC
www.fsc.org

Ducati Motor Holding spa
ducati.com

Via Cavalieri Ducati, 3
40132 Bologna, Italy
Ph. +39 051 6413111
Fax +39 051 406580

A Sole Shareholder Company
A Company subject to the Management and Coordination activities of AUDI AG