821
Model Year 2015

MONSTER

Chassis prefix:
Cylinder capacity: 821

D19000015 - 1
SPARE PARTS CATALOGUE
en-US

The present spare parts order exactly the right spare parts.

When ordering specify:

1. the part's code number followed by its description and quantity needed;
2. the motorcycle's serial number, stamped on the steering head.

Reference to right and left apply to the vehicle in terms of its direction of move-ment.

Spare parts drawings are general and do not represent the part.

The contents of this catalogue are general and can undergo changes without prior notice.

CHARACTERISTICS LEGENDA

CHARACTERISTIC CODE	CHARACTERISTIC DESCRIPTION	VALUE CODE	VALUE DESCRIPTION
CPT	PARTICOLAR CHARACTERISTICS	D35	
CPT	PARTICOLAR CHARACTERISTICS	DEP	
CPT	PARTICOLAR CHARACTERISTICS	STD	MOTO STANDARD
DFR	DAFRA	N	NO
MOD	MODEL	M 821	
PLT	PLANT	DB10	DMH
XCO	MAIN COLOUR	NGWS	
XCO	MAIN COLOUR	R	
XCR	FRAME / WHEEL COLOUR	R-B	
XCR	FRAME / WHEEL COLOUR	RMR	
XST	STANDARD COUNTRY	AUS	
XST	STANDARD COUNTRY	EUR	
XST	STANDARD COUNTRY	FRA	
XST	STANDARD COUNTRY	JAP	

COLOUR	COLOUR CODE	COLOUR DESCRIPTION	FINISHED PRODUCTS
	NGWS	STAR WHITE SILK	(D19002415) M 821 15 EUR NGWS RMR STD DMH (D19003015) M 821 15 JAP NGWS RMR STD DMH (D19003115) M 821 15 AUS NGWS RMR STD DMH (D19003615) M 821 15 EUR NGWS RMR D35 DMH (D19003715) M 821 15 EUR NGWS RMR DEP DMH (D19004115) M 821 15 FRA NGWS RMR STD DMH
	R	RED	(D19002215) M 821 15 EUR R R-B STD DMH (D19002815) M 821 15 JAP R R-B STD DMH (D19002915) M 821 15 AUS R R-B STD DMH (D19003415) M 821 15 EUR R R-B D35 DMH (D19003515) M 821 15 EUR R R-B DEP DMH (D19004015) M 821 15 FRA R R-B STD DMH

General information....3
Colours....4
Group ELECTRIC....8
Drawing 018 - BATTERY HOLDER [MOD:M 821]....8
Drawing 020 - HEADLIGHT [MOD:M 821;XST:AUS,EUR,FRA,JAP]....12
Drawing 18A - ENGINE CONTROL UNIT [MOD:M 821]....14
Drawing 18B - WIRING HARNESS [MOD:M 821]....18
Drawing 20A - INSTRUMENT PANEL [MOD:M 821]....20
Drawing 28B - PLATE HOLDER [MOD:M 821;XST:EUR,FRA,JAP]....22
Drawing 28B - PLATE HOLDER [MOD:M 821;XST:AUS]....24
Group ENGINE....26
Drawing 002 - SHIFT CAM - FORK [MOD:M 821]....26
Drawing 003 - GEAR BOX [MOD:M 821]....28
Drawing 004 - CLUTCH [MOD:M 821]....30
Drawing 005 - CLUTCH COVER [MOD:M 821]....32
Drawing 006 - CONNECTING RODS [MOD:M 821]....34
Drawing 007 - CYLINDERS - PISTONS [MOD:M 821]....36
Drawing 008 - DISTRIBUZIONE [MOD:M 821]....38
Drawing 009 - FILTERS AND OIL PUMP [MOD:M 821]....40
Drawing 010 - HALF-CRANKCASES PAIR [MOD:M 821]....42
Drawing 011 - WATER PUMP-ALTR-SIDE CRNKCSE COVER [MOD:M 821]....46
Drawing 012 - ELECTRIC STARTING AND IGNITION [MOD:M 821]....50
Drawing 013 - CYLINDER HEAD : TIMING SYSTEM [MOD:M 821]....52
Drawing 014 - VERTICAL HEAD [MOD:M 821]....54
Drawing 015 - HORIZONTAL HEAD [MOD:M 821]....62
Drawing 10A - HALF-CRANKCASES PAIR [MOD:M 821]....70
Group TOOLS....72
Drawing 001 - WORKSHOP SERVICE TOOLS, ENGINE [MOD:M 821]....72
Drawing 01A - WORKSHOP SERVICE TOOLS, FRAME [MOD:M 821]....76

Drawing 01B - DDS (2) TESTER [MOD:M 821]....78
Group FRAME....80
Drawing 016 - SWITCH ASSY, OIL PRESSURE [MOD:M 821]....80
Drawing 017 - THROTTLE BODY [MOD:M 821;XST:AUS,EUR,FRA,JAP]....82
Drawing 019 - EXHAUST SYSTEM [MOD:M 821]....84
Drawing 021 - HANDLEBAR AND CONTROLS [MOD:M 821]....88
Drawing 022 - FRAME [MOD:M 821]....92
Drawing 023 - CLUTCH CONTROL [MOD:M 821]....94
Drawing 024 - FRONT BRAKE SYSTEM [MOD:M 821]....96
Drawing 025 - REAR BRAKE SYSTEM [MOD:M 821]....98
Drawing 026 - RUOTA ANTERIORE E POSTERIORE [MOD:M 821]....100
Drawing 027 - REAR FRAME COMP. [MOD:M 821]....104
Drawing 028 - SOSPENSIONE POSTERIORE [MOD:M 821]....106
Drawing 029 - AIR INTAKE - OIL BREATHER [MOD:M 821]....108
Drawing 030 - WATER COOLER [MOD:M 821]....110
Drawing 031 - COOLING SYSTEM [MOD:M 821]....112
Drawing 032 - FUEL TANK [MOD:M 821;XST:AUS,EUR,FRA,JAP]....114
Drawing 033 - SEAT [MOD:M 821]....116
Drawing 034 - HALF FAIRING [MOD:M 821]....120
Drawing 21A - FRONT FORK [MOD:M 821;XST:AUS,EUR,FRA,JAP]....122
Drawing 22A - SIDE STAND [MOD:M 821]....124
Drawing 24A - ANTILOCK BRAKING SYSTEM (ABS) [MOD:M 821]....126
Drawing 27A - FOOTRESTS, LEFT [MOD:M 821]....128
Drawing 27B - FOOTRESTS, RIGHT [MOD:M 821]....130
Drawing 28A - FORCELLONE POSTERIORE [MOD:M 821;XST:EUR,FRA,JAP]....132
Drawing 28A - FORCELLONE POSTERIORE [MOD:M 821;XST:AUS]....134
Alphanumeric index....136

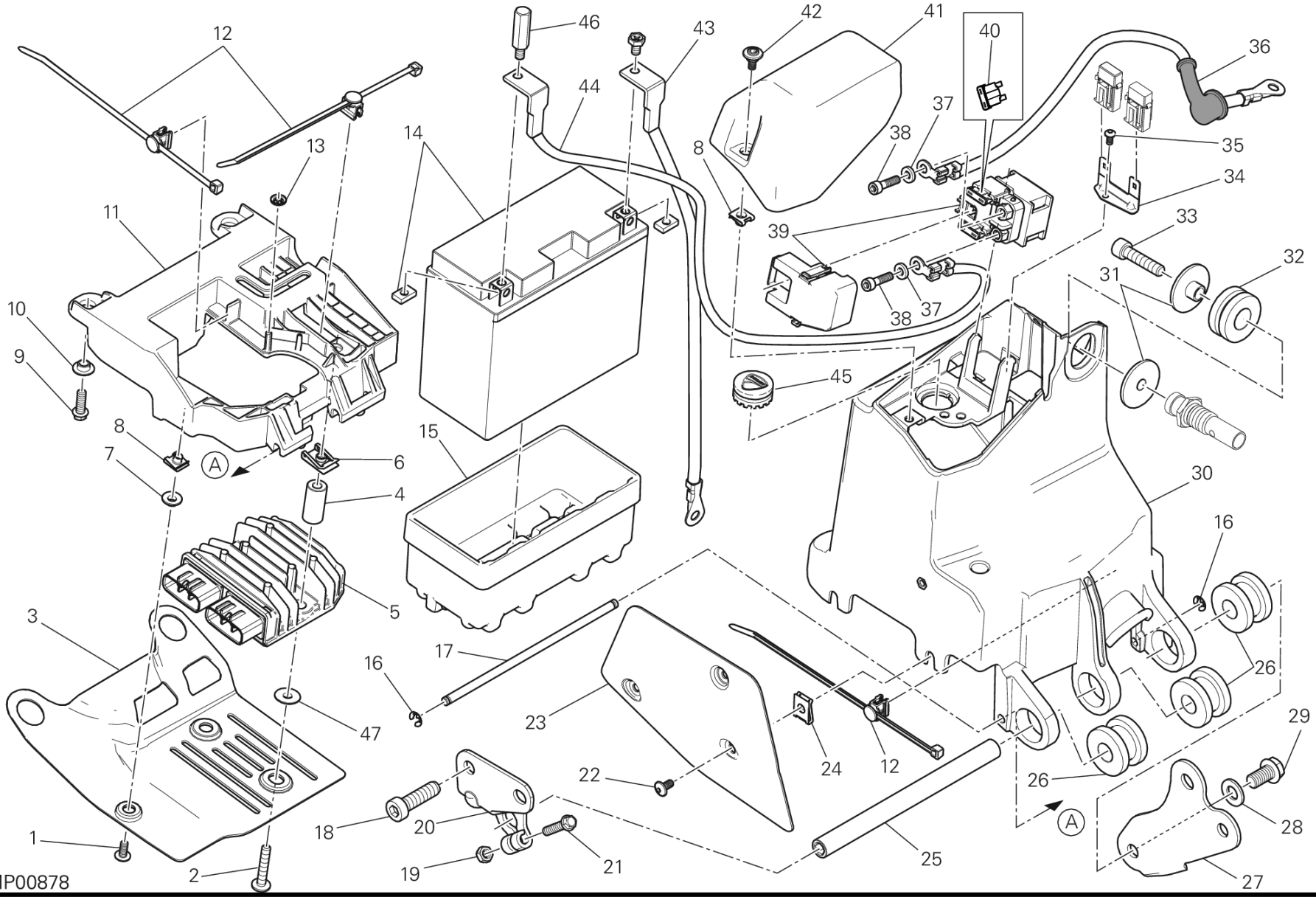
12
46
43
42
41
40
36
44
37
38
35
14
13
8
34
11
39
33
32
31
10
38
37
9
45
8
15
7
A
6
4
30
16
5
3
17
16
26
23
29
47
24
12
22
26
18
20
A
28
1
19
21
25
2
27
IMP00878

DRAWING 018 - BATTERY HOLDER [MOD:M 821]

GROUP ELECTRIC

POS.	CODE	DESCRIPTION	QTY	START DATE	END DATE	VALIDITY	NOTES
1	77244183B	SCREW	1	01/08/2013			
2	77244443B	SCREW	2	20/10/2013			
3	4601A621B	GUARD VOLTAGE REGULATOR	1	01/08/2013			
4	71614731AA	SPACER	2	01/08/2013			
5	54040321A	VOLTAGE REGULATOR	1	01/08/2013			
6	85040381A	QUICK FASTENING	2	01/08/2013			
7	71614071A	SPACER 5.2X8.4X2	1	01/08/2013			
8	85041951AA	QUICK FASTENING	3	01/08/2013			
9	77251008B	SCREW M6X18	2	22/10/2013			
10	71610381B	SPACER	2	22/10/2013			
11	24714641A	COVER, BATTERY	1	01/08/2013			
12	75840771A	FAIRLEAD	3	01/08/2013			
13	85040561A	WASHER, LOCK	1	22/10/2013			
14	39520132C	BATTERY	1	22/10/2013			
15	86611681A	CUSHION, BATTERY	1	22/10/2013			
16	88450661A	SNAP RING	2	22/10/2013			
17	82114581BA	PIN	1	22/10/2013			
18	77355203C	SCREW M10x35	1	22/10/2013			
19	74941333B	NUT	1	22/10/2013			
20	83018081AA	RIGHT BRACKET	1	22/10/2013			
21	77251043B	SCREW	1	22/10/2013			
22	77240258C	SCREW	3	22/10/2013			
23	4601A612A	BATTERY MOUNT HEAT GUARD	1	22/10/2013			
24	85040551A	QUICK FASTENING	2	01/08/2013			
25	82114571AA	PIN	1	22/10/2013			
26	76411431A	VIBRATION DAMPER PAD	3	01/08/2013			
27	83018091AA	LEFT BRACKET	1	22/10/2013			
28	85250601A	WASHER	1	22/10/2013			
29	77251593B	SCREW	1	22/10/2013			
30	8291B631B	BATTERY HOLDER	1	01/08/2013			
31	71614271A	SPACER	2	22/10/2013			
32	76411421A	VIBRATION DAMPER PAD	1	01/08/2013			
33	77151283B	SCREW	1	22/10/2013			
34	83018352AA	BRACKET FUSE	1	01/08/2013			
35	77440341A	SCREW, TAPPING	1	01/08/2013			

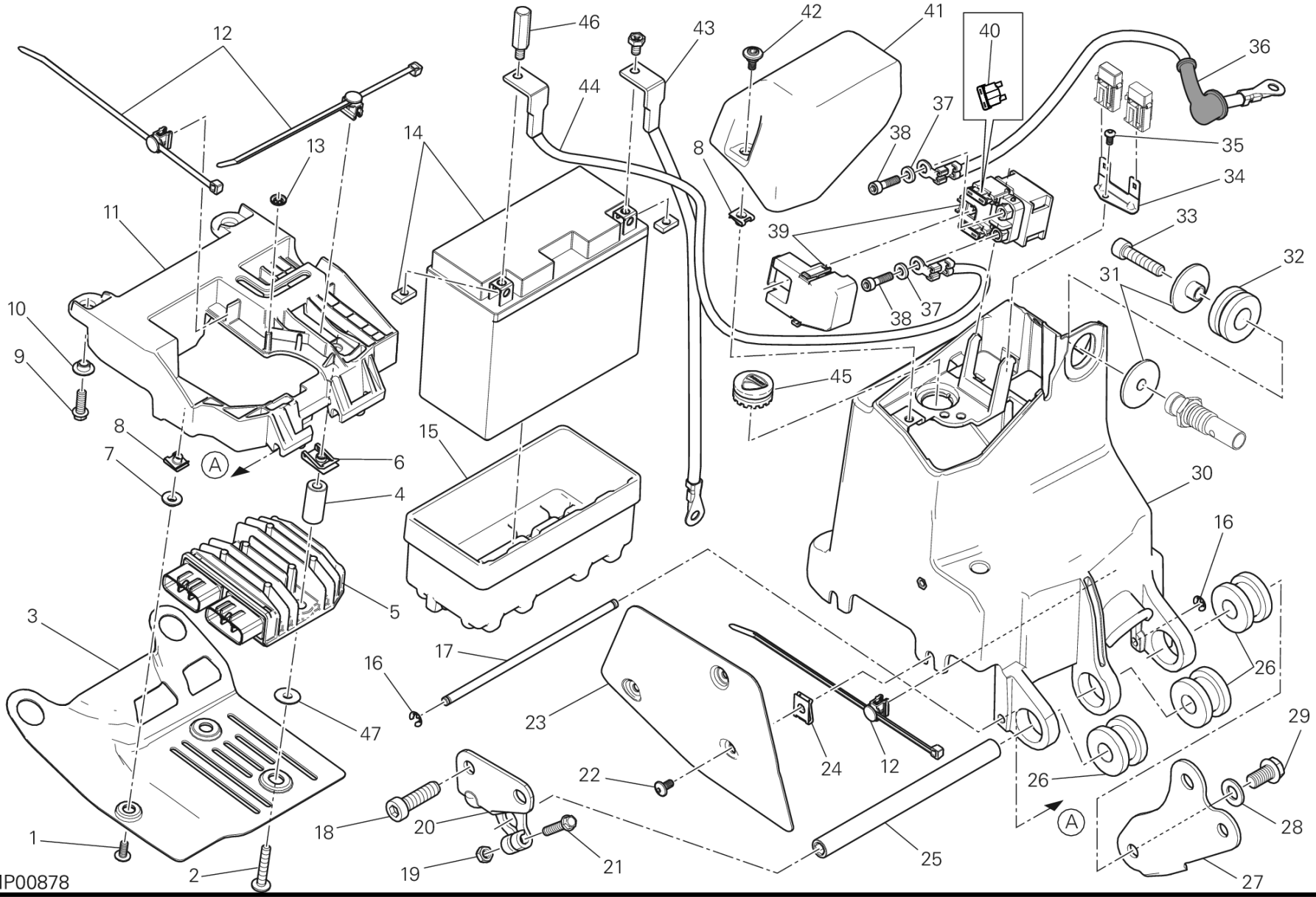
12
46
43
42
41
40
36
44
37
38
35
14
13
8
34
11
39
33
32
31
10
38
37
9
45
8
15
7
A
6
4
30
16
5
3
17
16
26
23
29
47
24
12
22
26
18
20
A
28
1
19
21
25
2
27
IMP00878

POS.	CODE	DESCRIPTION	QTY	START DATE	END DATE	VALIDITY	NOTES
36	51410721B	CABLE	1	01/08/2013			
37	85350101A	WASHER, SPRING	2	01/08/2013			
38	77156628B	SCREW TCEIF M6X10	2	01/08/2013			
39	39740081B	STARTER RELAY	1	01/08/2013			
40	38940231A	FUSE 30A	1				
41	24714651A	COVER UPPER	1	22/10/2013			
42	77210853B	SCREW TCEI M5X9	2	22/10/2013			
43	51310281B	BATTERY - ENGINE GROUNDING CABLE	1	01/08/2013			
44	51410711A	CABLE	1	01/08/2013			
45	76410621B	RUBBER PAD	2	01/08/2013			
46	77918711BA	SCREW, SPECIAL WIRE, BATTERY PLUS LEAD	1	22/10/2013			
47	71610111AA	SPACER	2	07/11/2013			

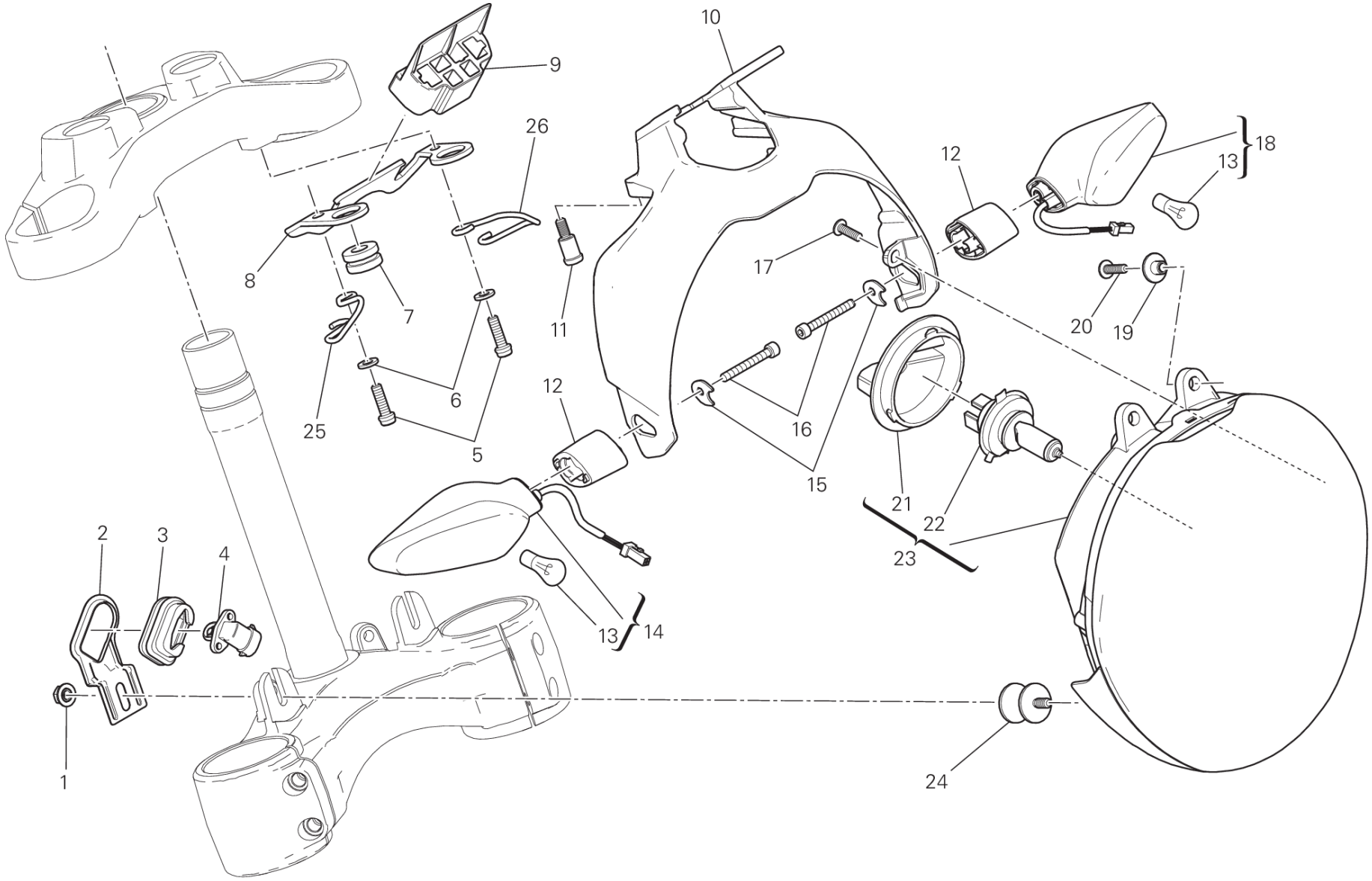

FAN00258

POS.	CODE	DESCRIPTION	QTY	START DATE	END DATE	VALIDITY	NOTES
1	75050011B	NUT 6MM	2	22/10/2013			
2	83018731AA	BRACKET, SENSOR TEMPERATURE	1	22/10/2013			
3	76410971A	RUBBER PAD	1	22/10/2013			
4	55240121A	SENSOR, AIR TEMPERATURE	1	22/10/2013			
5	77110191A	SCREW TCEIF M6X20	2	01/08/2013			
6	85211761A	WASHER 6.4X12.5X1.6	2	01/08/2013			
7	76410641A	VIBRATION DAMPER PAD	2	01/08/2013			
8	8291B651AA	BRACKET, CONNECTOR	1	01/08/2013			
9	86611692B	RUBBER PAD	1	15/01/2014			
10	8291B661BB	BRACKET, HEADLIGHT & DASHBOARD	1	22/10/2013			
11	82113571A	THREATENED PIN	2	22/10/2013			
12	7131A481A	SPACER	2	22/10/2013			
13	39040211A	BULB	2				
14	53010236B	FLASHER LIGHT FRONT RH- REAR LH	1	01/10/2013			
15	82714931A	PLATE	2	22/10/2013			
16	77150498B	SCREW TCEI M5X40	2	22/10/2013			
17	77440041A	SCREW, TAPPING M5X16	2	01/08/2013			
18	53010226B	FLASHER LIGHT FRONT LH - REAR RH	1	01/10/2013			
19	71614251A	SPACER	2	22/10/2013			
20	77213203B	SCREW TBEIF M5X18	2	22/10/2013			
21	39040311A	CAP	1				
22	39040291A	BULB	1				
23	52010271C	HEADLIGHT	1	22/10/2013			
24	70010481B	DAMPER M6X12	2	22/10/2013			
25	88110931A	HOSE GUIDE RIGHT	1	01/03/2014			
26	88110961A	HOSE GUIDE LEFT	1	01/03/2014			

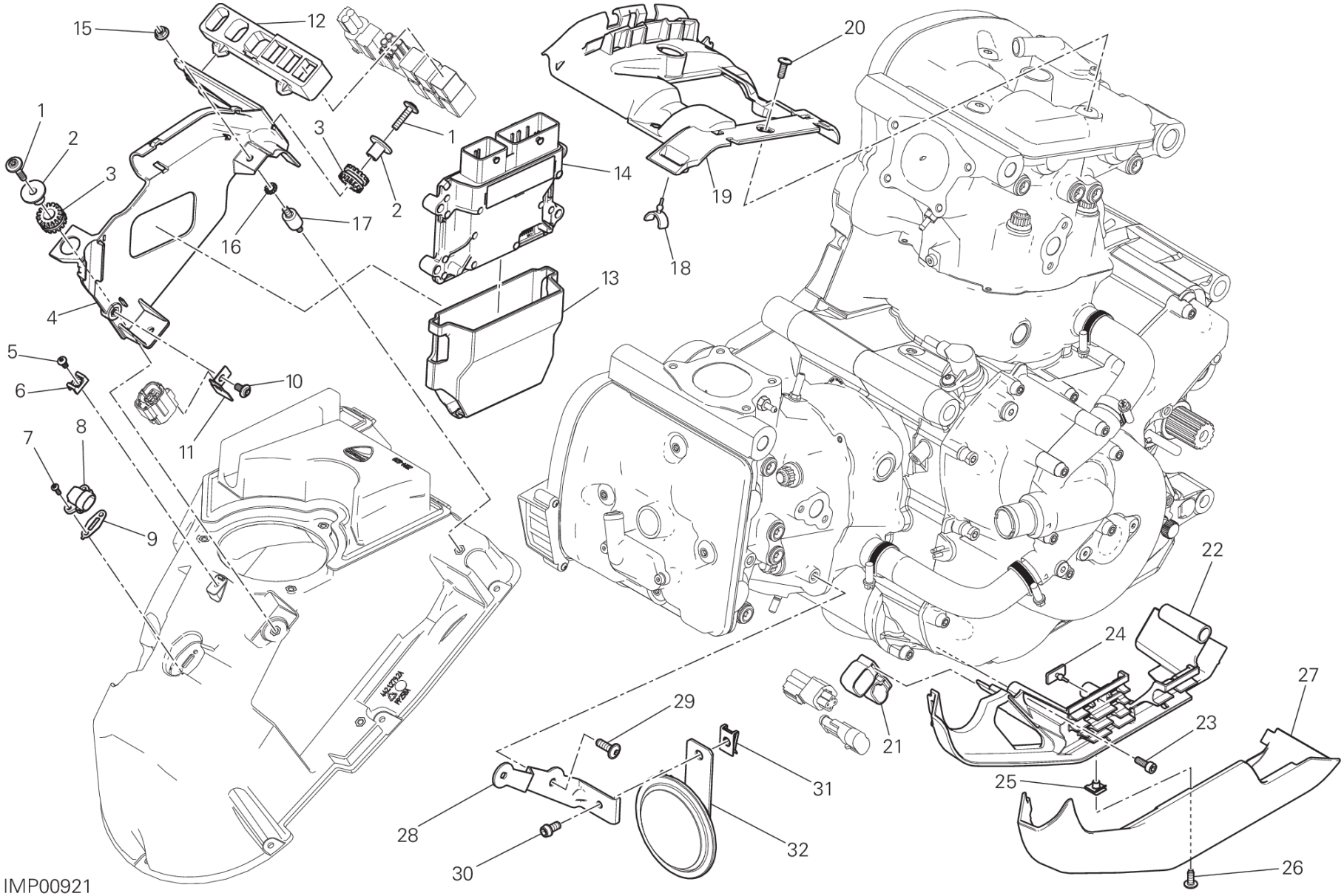
15
12
20
1
2
3
3
1
14
19
2
17
16
18
13
4
5
6
10
11
7
8
9
22
24
27
29
23
21
31
25
28
32
30
26
IMP00921

POS.	CODE	DESCRIPTION	QTY	START DATE	END DATE	VALIDITY	NOTES
1	77214061AA	SCREW, SPECIAL	2	11/06/2014			
2	71610061A	SPACER	2	11/06/2014			
3	76410221A	VIBRATION DAMPER PAD	2	11/06/2014			
4	8291B641C	BRACKET ENGINE CONTROL UNIT	1	12/03/2013			
5	77440141A	SCREW, TAPPING 4X8 WN1412	1	12/03/2013			
6	85041711A	HOSE GUIDE	1	12/03/2013			
7	77440213C	SCREW	2	12/03/2013			
8	55240121A	SENSOR, AIR TEMPERATURE	1	22/10/2013			
9	78811041A	GASKET, COOLING WATER SENSOR	1	12/03/2013			
10	77244168B	SCREW	1	12/03/2013			
11	8291B771AA	CONNECTOR HOLDER	1	12/03/2013			
12	86611611A	RUBBER PAD UPPER	1	12/03/2013			
13	86611981A	VIBRATION DAMPER ENGINE CONTROL UNIT	1	11/06/2014			
14	28642531A	ENGINE CONTROL UNIT	1	12/03/2013		MOD:M 821;XST:AUS,EUR	EU - UK - DEP
	28642531E	ENGINE CONTROL UNIT	1			MOD:M 821;XST:FRA	FRA
	28642531F	ENGINE CONTROL UNIT	1			MOD:M 821;XST:JAP	JAP
	28642551A	ENGINE CONTROL UNIT	1				35Kw
	28642561A	ENGINE CONTROL UNIT	1				25Kw
15	74850061A	NUT	2	11/06/2014			
16	46240461A	WASHER, SPRING	2	11/06/2014			
17	70010431A	DAMPER	2	11/06/2014			
18	86610731A	VIBRATION DAMPER	2	22/10/2013			
19	75810782A	PROTECTION WIRING VERTICAL HEAD	1	22/10/2013			
20	77240278C	SCREW	3	22/10/2013			
21	86611731A	RUBBER PAD CONNECTOR	1	22/10/2013			
22	8291C661D	HOLDER WIRING LOWER	1	07/05/2014			
23	77150408B	SCREW TCEI M5X14	3	22/10/2013			
24	86610361A	RUBBER PAD	1	22/10/2013			
25	85040471A	QUICK FASTENING M5	1	05/05/2014			
26	77244173B	SCREW	1	22/09/2014			
27	48016351A	COVER, LOWER LEFT	1	05/05/2014	22/09/2014		
28	83018872AA	HORN BRACKET	1	05/05/2014			
29	77240403C	SCREW	1	06/05/2014			
30	77156638B	SCREW TCEIF M6X12	1	05/05/2014			
31	85040381A	QUICK FASTENING	1	06/05/2014			

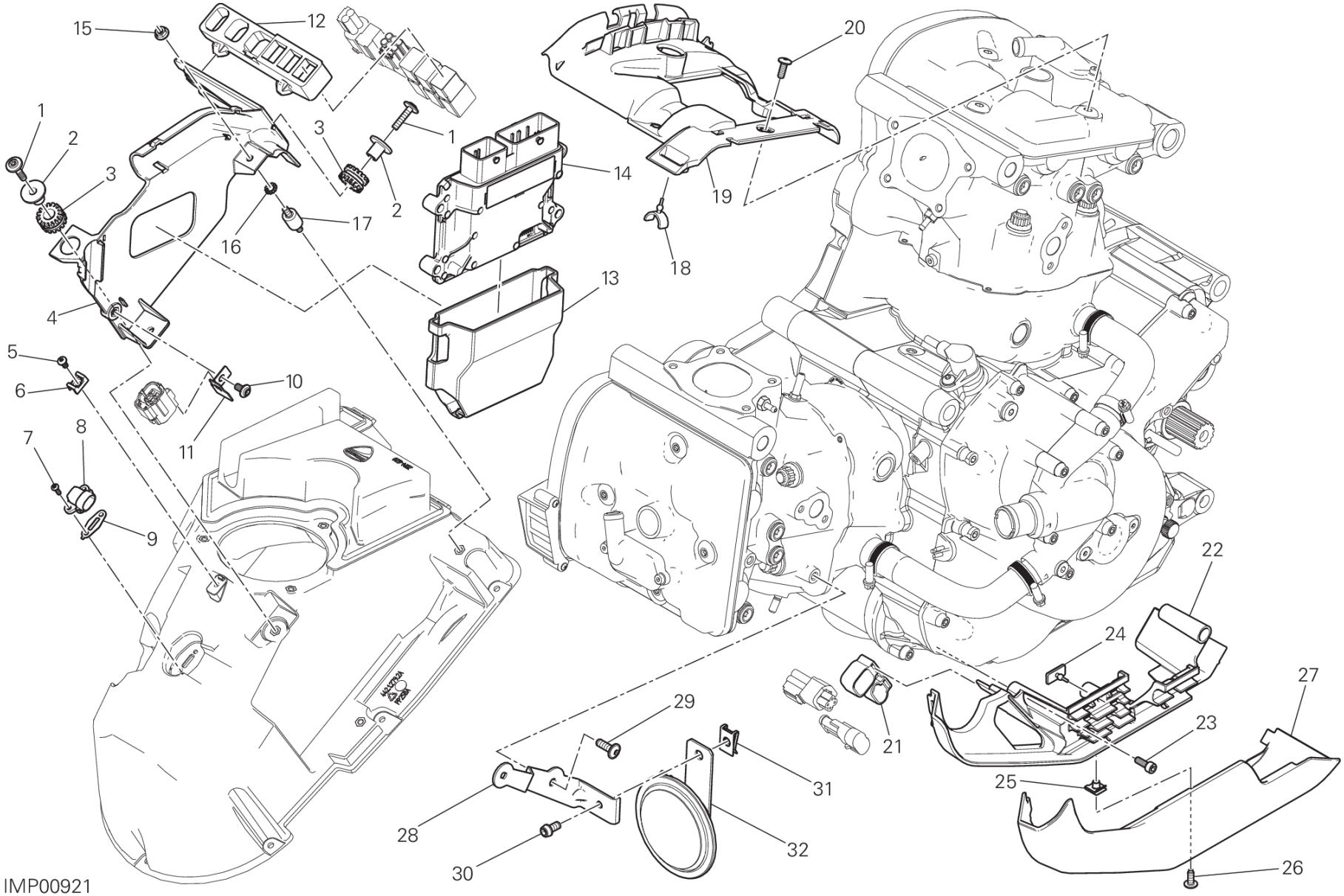
15
12
20
1
2
3
3
1
14
19
2
17
16
18
13
4
5
6
10
11
7
8
9
22
24
27
29
23
21
31
25
28
32
30
26
IMP00921

POS.	CODE	DESCRIPTION	QTY	START DATE	END DATE	VALIDITY	NOTES
32	51640011AB	HORN	1	06/05/2014			

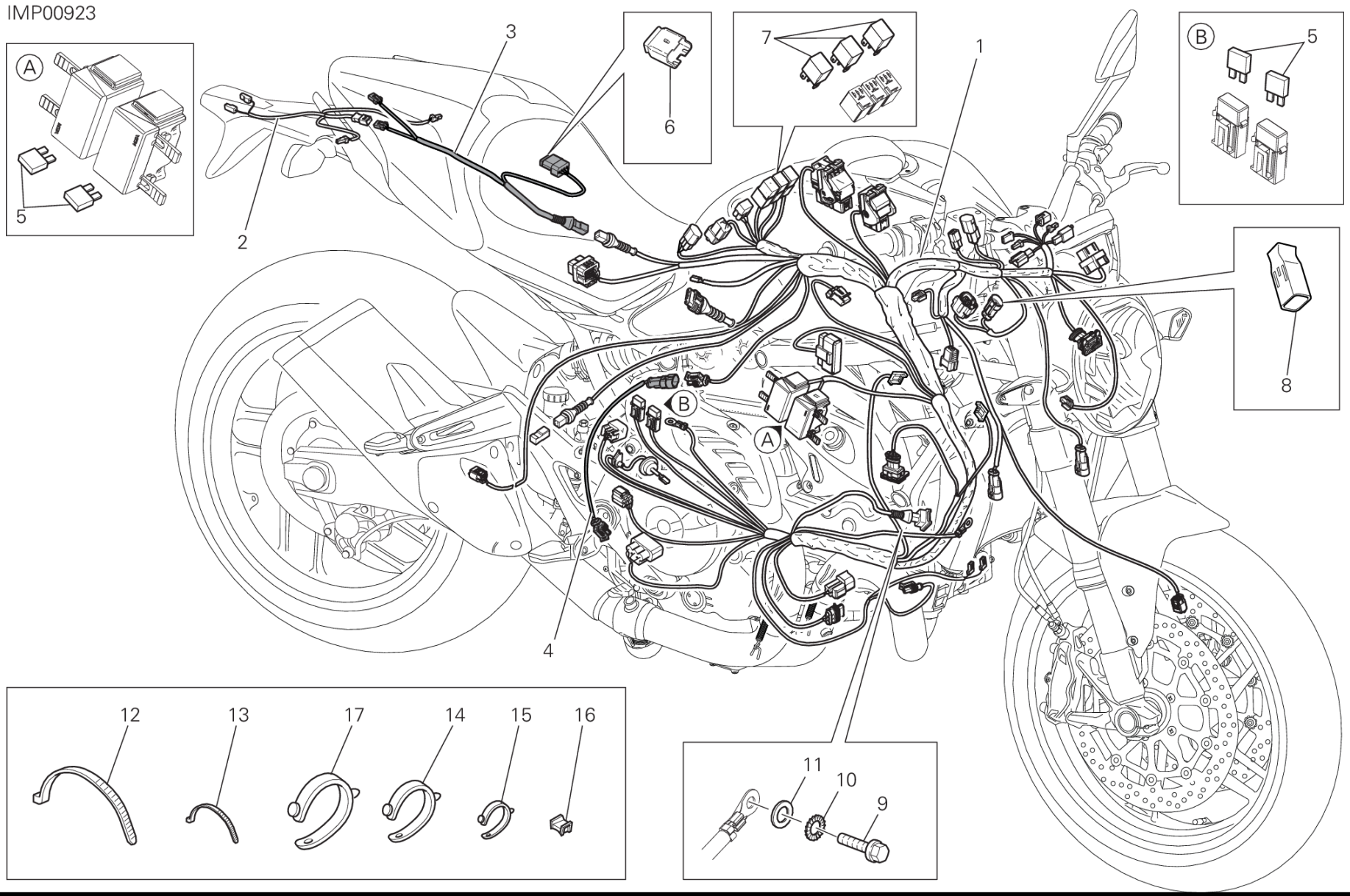
IMP00923
A
5
2
3
6
7
1
B
5
8
B
A
4
12
13
17
14
15
16
11
10
9

DRAWING 18B - WIRING HARNESS [MOD:M 821]

GROUP ELECTRIC

POS.	CODE	DESCRIPTION	QTY	START DATE	END DATE	VALIDITY	NOTES
1	51019741B	MAIN WIRING HARNESS	1	10/06/2014			
2	51019771C	WIRING PLATE HOLDER	1	10/06/2014			
3	51019761B	REAR WIRING	1	25/11/2013			
4	51019721A	EXTENSION, WIRE HARNESS SWITCH, REAR BRAKE	1	22/10/2013			
5	38940191A	FUSE 5A	4				
	38940201A	FUSE 10A	3				
	38940211A	FUSE 15A	1				
	38940221A	FUSE 20A	1				
	38940241A	FUSE 7,5A	1				
	38940251A	FUSE 30A	1				
	38940261A	FUSE 25A	1				
	38940301A	FUSE 3A	1				
6	87210532A	CAP DDA	1				
7	54140101A	RELAY	3				
8	87210641A	CAP, CONNECTOR	1				
9	77211061A	SCREW TEF M6X14	1	22/10/2013			
10	85550001B	SPRING WASHER	1	22/10/2013			
11	85350101A	WASHER, SPRING	1	22/10/2013			
12	069191030	CLAMP	19	01/10/2013			
13	74140381A	CLAMP	18	01/08/2013			
14	74110101A	CLAMP 70MM	2	22/10/2013			
15	74110551A	CLAMP	10	22/10/2013			
16	85040671A	CLAMP TUCKER	6	01/10/2013			
17	74110131A	CLAMP, RUBBER 82MM	2	22/10/2013			

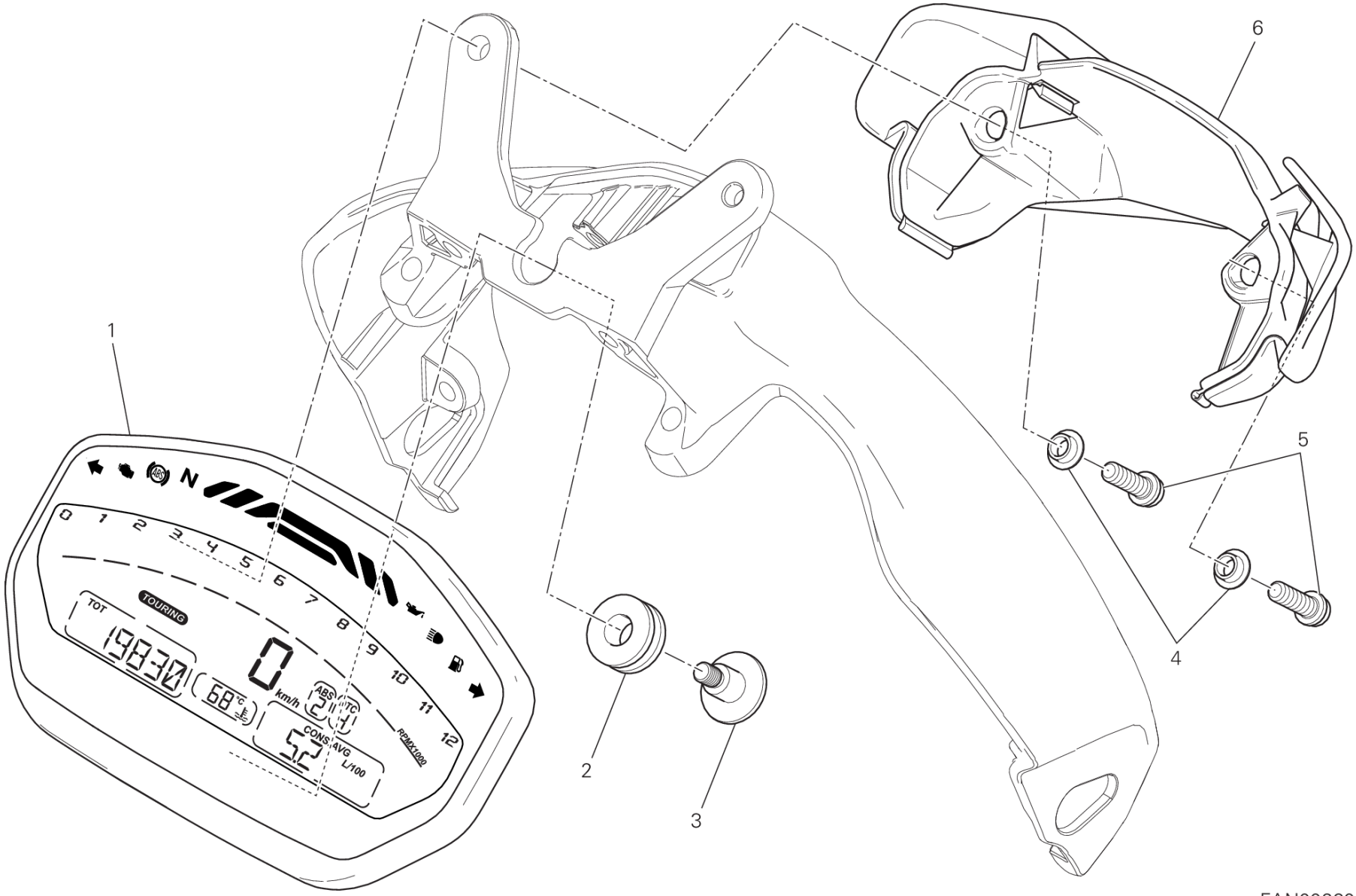
1
2
3
4
5
6
N
TOURING
TOT
19830
0
km/h
ABS
TC
CONS
AVG
L/100
RPMX1000
FAN00260

DRAWING 20A - INSTRUMENT PANEL [MOD:M 821]

GROUP ELECTRIC

POS.	CODE	DESCRIPTION	QTY	START DATE	END DATE	VALIDITY	NOTES
1	40611051E	INSTRUMENT PANEL	1	22/10/2013			
2	76410841A	VIBRATION DAMPER PAD	1	22/10/2013			
3	77214161AA	SCREW, SPECIAL	1	22/10/2013			
4	71611521A	SPACER WITH COLLAR	2	22/10/2013			
5	77156413B	SCREW TCEIF M5X16	2	22/10/2013			
6	24714782A	COVER, METER	1	22/10/2013			

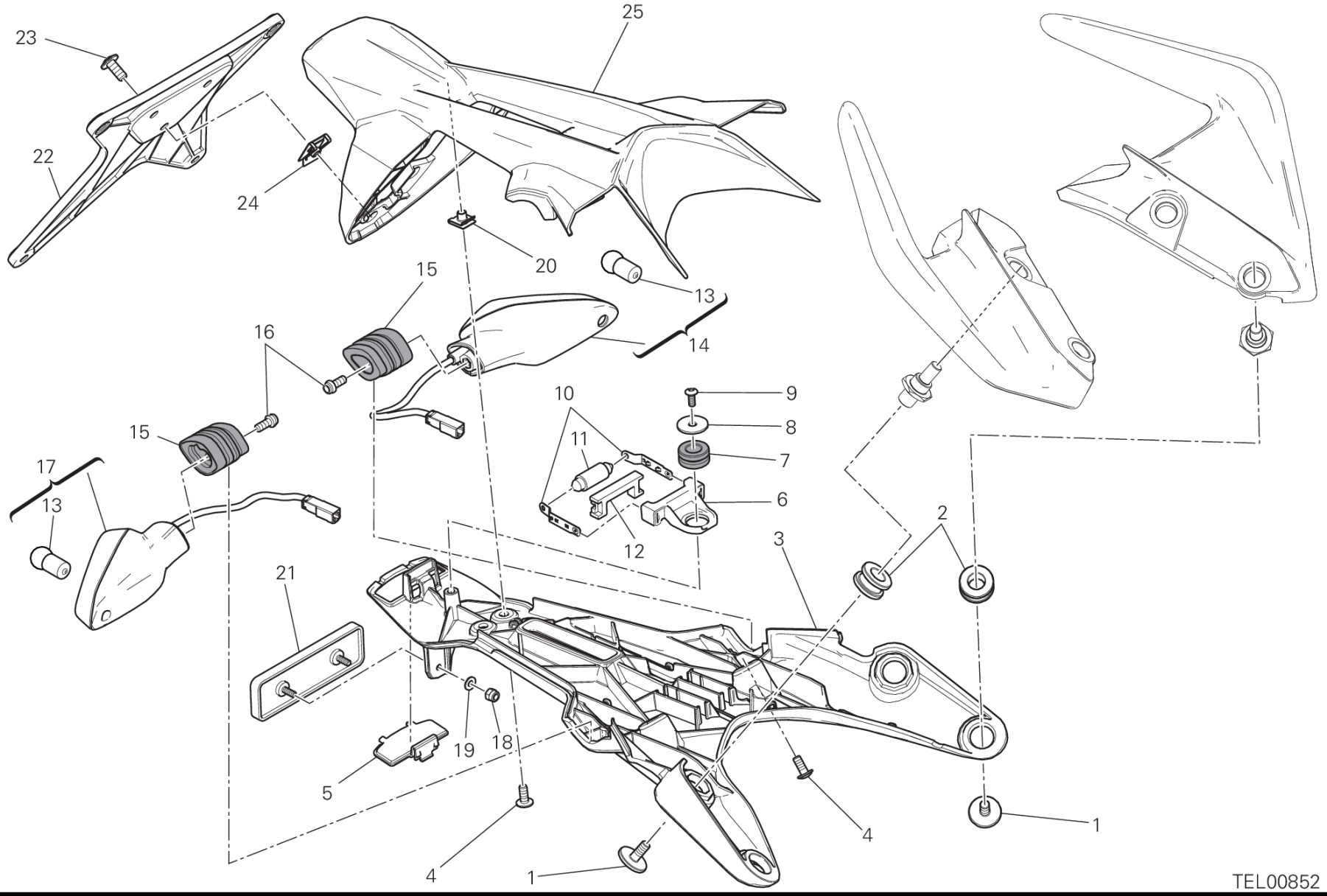
23
25
22
24
20
15
13
16
14
10
9
8
15
11
7
17
6
13
12
2
3
21
19
18
5
4
1
4
1
TEL00852

DRAWING 28B - PLATE HOLDER [MOD:M 821;XST:EUR,FRA,JAP]

GROUP ELECTRIC

POS.	CODE	DESCRIPTION	QTY	START DATE	END DATE	VALIDITY	NOTES
1	77918681AA	SCREW, SPECIAL	4	25/11/2013			
2	76411481A	RUBBER PAD	4	25/11/2013			
3	56113201C	NUMBER PLATE HOLDER BOTTOM	1	02/06/2014			
4	77240253C	SCREW	4	09/04/2014			
5	24713331A	LENS, LICENCE LIGHT	1	12/11/2013			
6	83015483A	BRACKET	2	01/10/2012			
7	76410901A	RUBBER PAD	1	25/11/2013			
8	85241711A	WASHER 5.3X20X1.5	1	25/11/2013			
9	77440061A	SCREW, TAPPING 4.5X16	1	25/11/2013			
10	39110033A	BLADE	2	01/07/2012			
11	39040162A	BULB 12V-5W C5W	1	01/07/2012			
12	71319241A	SPACER	1	01/07/2012			
13	39040211A	BULB	2	12/03/2012			
14	53010236A	FLASHER LIGHT FRONT RH- REAR LH	1	15/02/2013			
15	71314703A	SPACER	2	01/07/2012			
16	77110441A	SCREW TCEIF M5X16	2	19/10/2012			
17	53010226A	FLASHER LIGHT FRONT LH - REAR RH	1	15/02/2013			
18	74950011B	NUT, SPRING	2	15/11/2012			
19	85250011C	WASHER 4.3X9X0.8	2	06/12/2013			
20	85040471A	QUICK FASTENING M5	2	01/07/2012			
21	52910061A	REFLEX REFLECTOR, REAR	1	15/11/2012			
22	56110261A	NUMBER PLATE HOLDER	1	06/12/2013			
23	77240418C	SCREW	3	09/04/2014			
24	85040381A	QUICK FASTENING	3	01/07/2012			
25	56113191A	NUMBER PLATE HOLDER UPPER	1	25/11/2013			

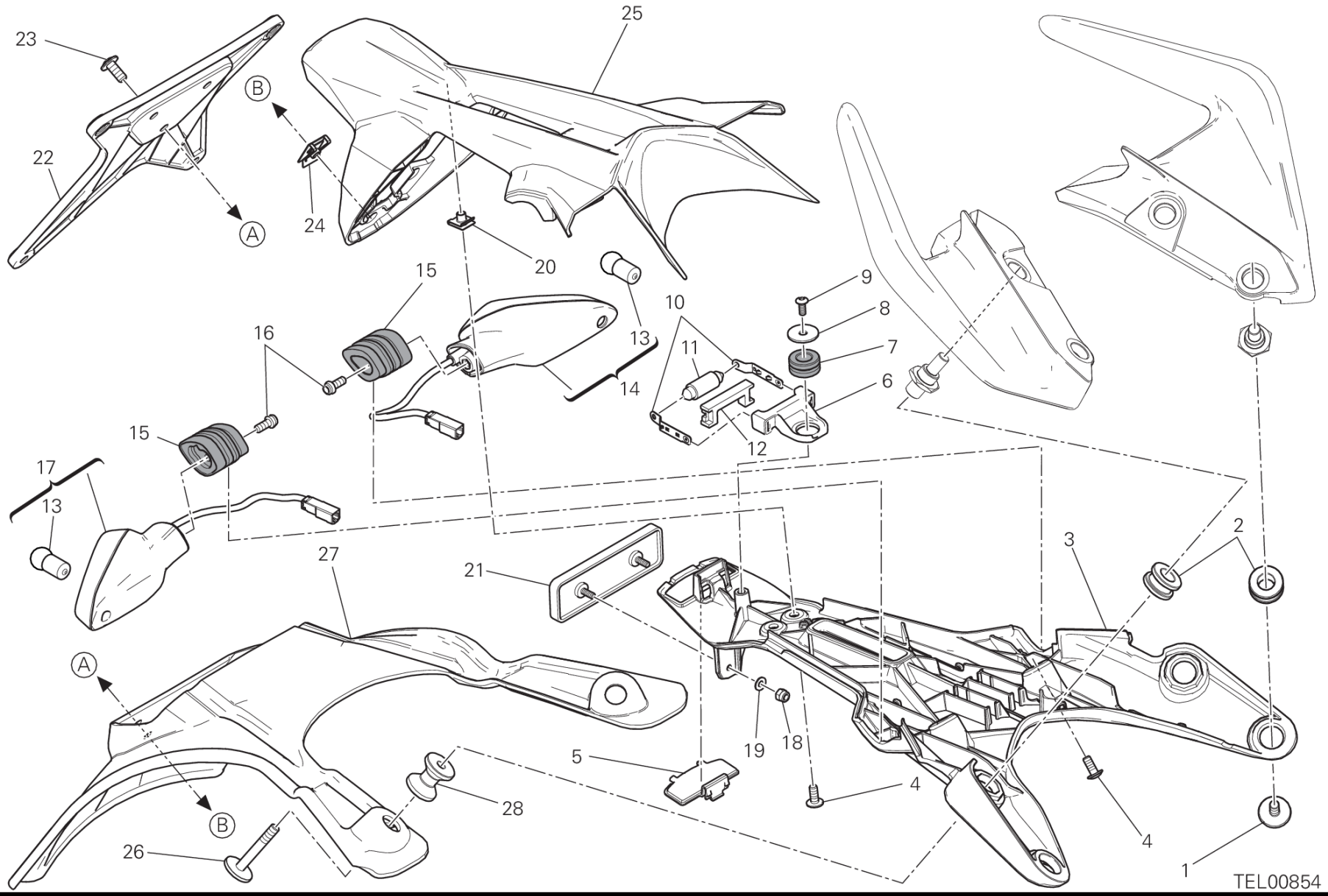
23
22
B
A
24
25
20
15
16
13
14
10
11
9
8
7
6
12
15
17
13
27
21
3
2
A
B
19
18
5
4
28
26
4
1
TEL00854

DRAWING 28B - PLATE HOLDER [MOD:M 821;XST:AUS]

GROUP ELECTRIC

POS.	CODE	DESCRIPTION	QTY	START DATE	END DATE	VALIDITY	NOTES
1	77918681AA	SCREW, SPECIAL	2	25/11/2013			
2	76411481A	RUBBER PAD	4	25/11/2013			
3	56113201C	NUMBER PLATE HOLDER BOTTOM	1	02/06/2014			
4	77240253C	SCREW	4	09/04/2014			
5	24713331A	LENS, LICENCE LIGHT	1	12/11/2013			
6	83015483A	BRACKET	2	01/10/2012			
7	76410901A	RUBBER PAD	1	25/11/2013			
8	85241711A	WASHER 5.3X20X1.5	1	25/11/2013			
9	77440061A	SCREW, TAPPING 4.5X16	1	25/11/2013			
10	39110033A	BLADE	2	01/07/2012			
11	39040162A	BULB 12V-5W C5W	1	01/07/2012			
12	71319241A	SPACER	1	01/07/2012			
13	39040211A	BULB	2	12/03/2012			
14	53010236A	FLASHER LIGHT FRONT RH- REAR LH	1	15/02/2013			
15	71314703A	SPACER	2	01/07/2012			
16	77110441A	SCREW TCEIF M5X16	2	19/10/2012			
17	53010226A	FLASHER LIGHT FRONT LH - REAR RH	1	15/02/2013			
18	74950011B	NUT, SPRING	2	15/11/2012			
19	85250011C	WASHER 4.3X9X0.8	2	06/12/2013			
20	85040471A	QUICK FASTENING M5	2	01/07/2012			
21	52910061A	REFLEX REFLECTOR, REAR	1	15/11/2012			
22	56110261A	NUMBER PLATE HOLDER	1	06/12/2013			
23	77240418C	SCREW	3	09/04/2014			
24	85040381A	QUICK FASTENING	3	01/07/2012			
25	56113191A	NUMBER PLATE HOLDER UPPER	1	25/11/2013			
26	77919011AA	SCREW	2	14/03/2014			
27	4601C051A	MUDFLAP	1	14/03/2014			
28	7131A771AA	SPACER	2	14/03/2014			

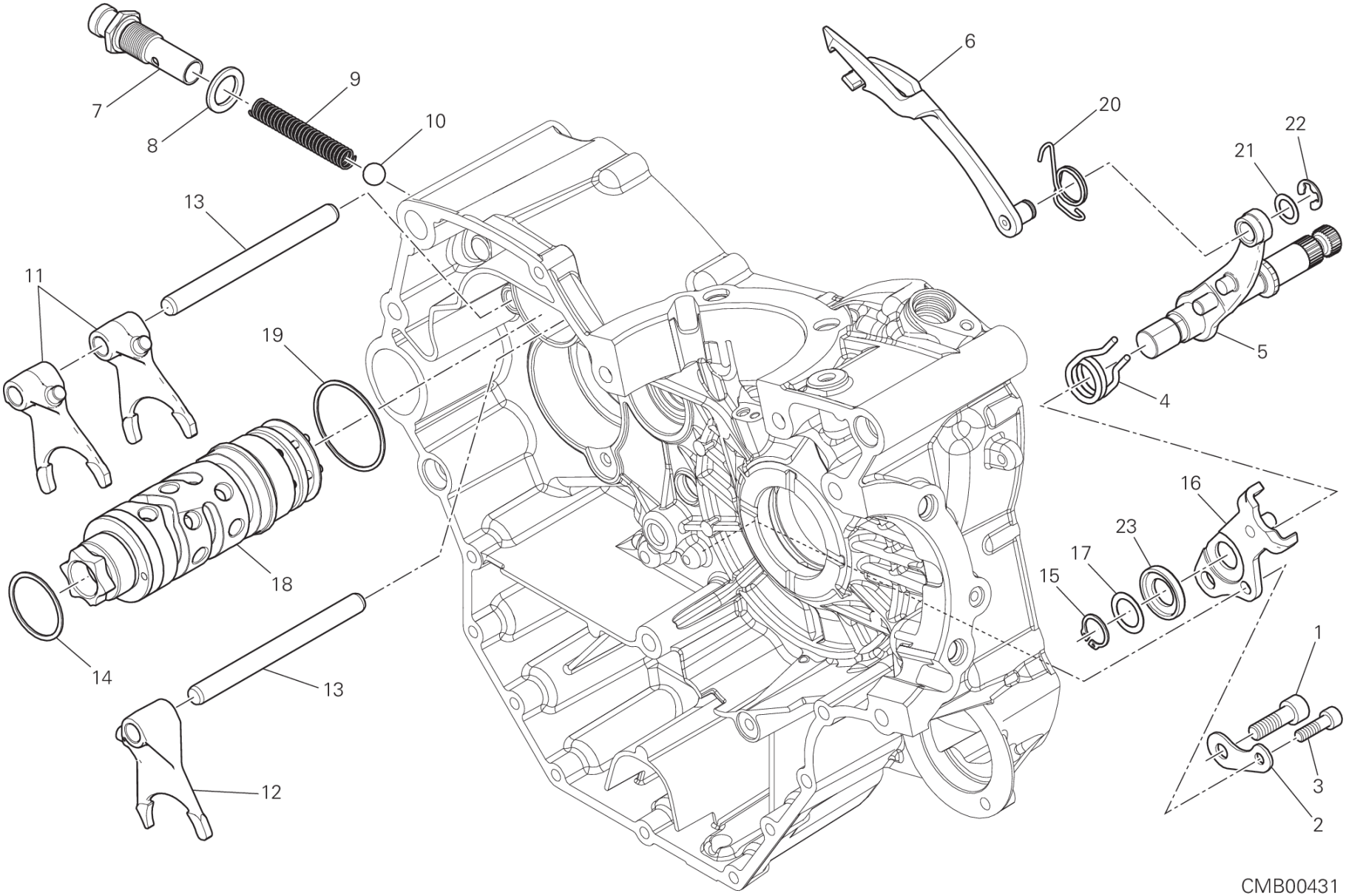
6
20
22
21
9
7
10
8
13
11
19
5
4
16
23
17
15
18
1
14
13
3
12
2
CMB00431

POS.	CODE	DESCRIPTION	QTY	START DATE	END DATE	VALIDITY	NOTES
1	77151250ZF	SCREW	1	18/09/2012			
2	71319151A	SPACER	1	19/09/2011			
3	77150670ZF	SCREW	1	18/09/2012			
4	79915061A	SPRING, SHIFT RETURN	1	03/05/2012			
5	82113331A	GEAR SELECTOR SHAFT	1	24/12/2009			
6	18020261A	CONTROL FORK	1	24/12/2009			
7	77918132A	SCREW, SPECIAL	1	17/07/2013			
8	027291090	GASKET 16.2X24X2	1	19/09/2011			
9	066013143	GEAR SELECTOR SPRING	1	19/09/2011			
10	768351134	BALL 11MM	1	19/09/2011			
11	180Z0031A	GEAR SELECTOR FORK,1ST/4TH-2ND/3RD	2	19/09/2011			
12	180Z0041A	FORK-SHIFT, 5TH&6TH	1	19/09/2011			
13	82113881A	FORK PIN	2	19/09/2011			
14	85210051A	THRUST WASHER 1 MM	1	10/02/2012			
15	88450511A	CIRCLIP	1	24/12/2009			
16	82610261A	STOPPER PLATE	1	24/12/2009			
17	85212541A	WASHER, THRUST	1	24/12/2009			
18	182Z0042A	COMPLETE GEARBOX DRUM	1	27/09/2012			
19	85210941A	THRUST WASHER 45.2X49X0.9	1	10/02/2012			
20	79914821A	RETURN SPRING	1	24/12/2009			
21	85212561A	WASHER, THRUST	1	24/12/2009			
22	88150011A	SPRING RING	1	24/12/2009			
23	88110671A	CENTERING RING	1	24/12/2009			

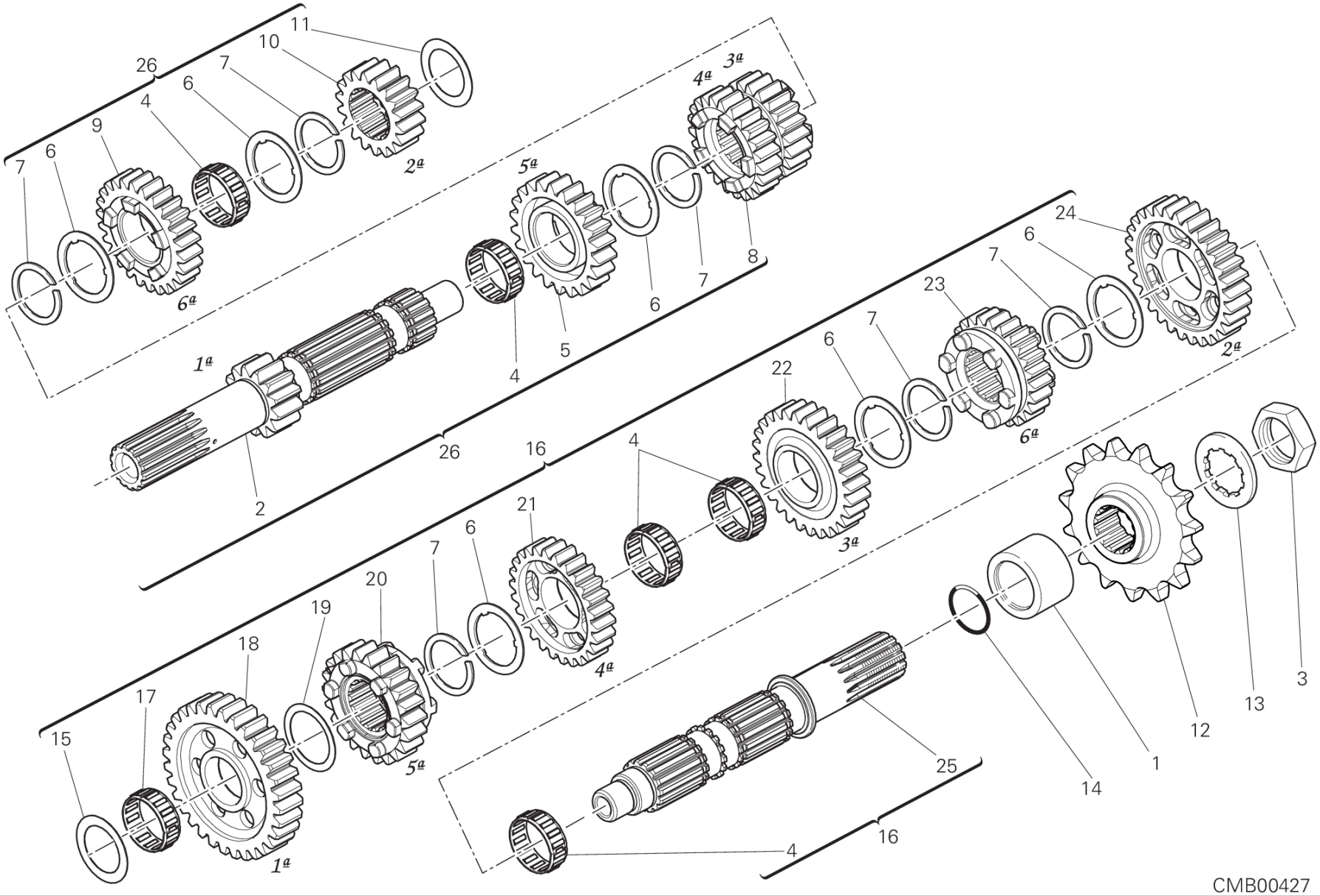
26
11
10
7
6
4
9
7
6
2ª
4ª
3ª
5ª
6ª
8
7
6
5
4
1ª
2
26
16
24
6
7
23
7
6
22
2ª
6ª
4
3ª
21
6
7
20
19
18
17
15
4ª
5ª
1ª
25
4
16
14
1
12
13
3
CMB00427

DRAWING 003 - GEAR BOX [MOD:M 821]

GROUP ENGINE

POS.	CODE	DESCRIPTION	QTY	START DATE	END DATE	VALIDITY	NOTES
1	71319951A	SPACER, ENGINE SPROCKET	1	17/07/2013			
2	14911101A	GEARBOX MAIN SHAFT	1	19/09/2011			
3	75010071A	NUT M25X1.5	1	15/11/2012			
4	70140051A	BEARING, NEEDLE	5	28/10/2011			
5	17214601A	DRIVEN GEAR 5TH SPEED 23T	1	19/09/2011			
6	85610011A	THRUST WASHER 0.5 MM	6	19/09/2011			
7	067016145	SPRING RING	6	19/09/2011			
8	17214591A	GEAR DRIVE 3/4TH SPEED T20/22	1	19/09/2011			
9	17214611A	GEAR DRIVE 6TH SPEEDTt24	1	19/09/2011			
10	17210021B	GEAR, 2ND DRIVE, NT:17	1	19/09/2011			
11	71310141E	THRUST WASHER 20.3X32X1.6	1	19/09/2011			
12	44910681A	SPROCKET T15	1	28/04/2014			
13	85110041A	WASHER, LOCK	1	15/11/2012			
14	46320537A	O-RING	1	19/09/2011			
15	71312661A	THRUST WASHER 17.3X31X3.15	1	28/10/2011			
16	15021831B	COMPLETE LAY SHAFT	1	28/10/2011			
17	764020002	BEARING, NEEDLE	1	28/10/2011			
18	17212182A	DRIVEN GEAR 1ST SPEED T37	1	28/10/2011			
19	067016155	THRUST WASHER 1 MM	1	28/10/2011			
20	17210103C	DRIVEN GEAR 5TH SPEED T24	1	28/10/2011			
21	17214621A	DRIVEN GEAR 4TH SPEED T:24	1	28/10/2011			
22	17210081C	DRIVEN GEAR 3RD SPEED T28	1	28/10/2011			
23	17210113C	DRIVEN GEAR 6TH SPEED T23	1	28/10/2011			
24	17212192A	DRIVEN GEAR 2ND SPEED T30	1	28/10/2011			
25	14911111B	LAY SHAFT	1	28/10/2011			
26	15021821A	COMPLETE MAIN SHAFT	1	28/10/2011			

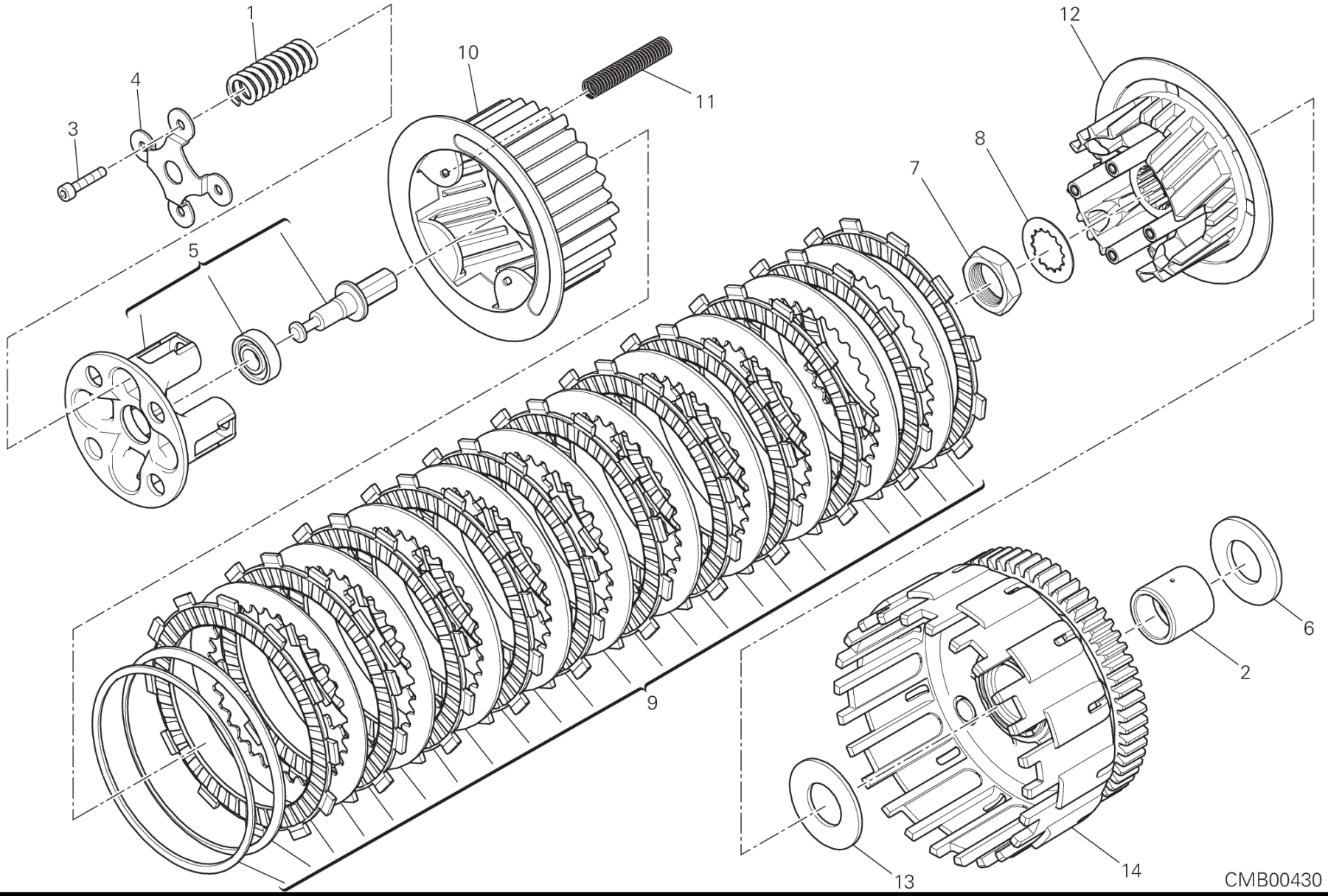
1
10
11
12
4
3
8
7
5
6
2
9
13
14
CMB00430

DRAWING 004 - CLUTCH [MOD:M 821]

GROUP ENGINE

POS.	CODE	DESCRIPTION	QTY	START DATE	END DATE	VALIDITY	NOTES
1	79710621E	SPRING	4	14/01/2013			
2	88110261A	BEARING INNER RING	1	19/09/2011			
3	77150458B	SCREW TCEI M5X25	4	26/01/2012			
4	19410581A	RING	1	26/01/2012			
5	19420573B	DISK, CLUTCH PRESSURE	1	29/01/2014			
6	71313751C	SPACER	1	19/09/2011			
7	75010071E	NUT	1	26/09/2012			
8	85213282A	LOCK WASHER	1	26/09/2012			
9	19020312A	CLUTCH DISC SET	1	20/02/2014			
10	19610611A	PLATE HOLDER HUB	1	05/07/2012			
11	79710641D	SPRING	4	19/11/2012			
12	19610601B	PLATE HOLDER HUB	1	20/02/2014			
13	85610141A	WASHER, THRUST	1	05/07/2012			
14	19810331A	PRIMARY DRIVEN GEAR COMP.	1	05/07/2012			

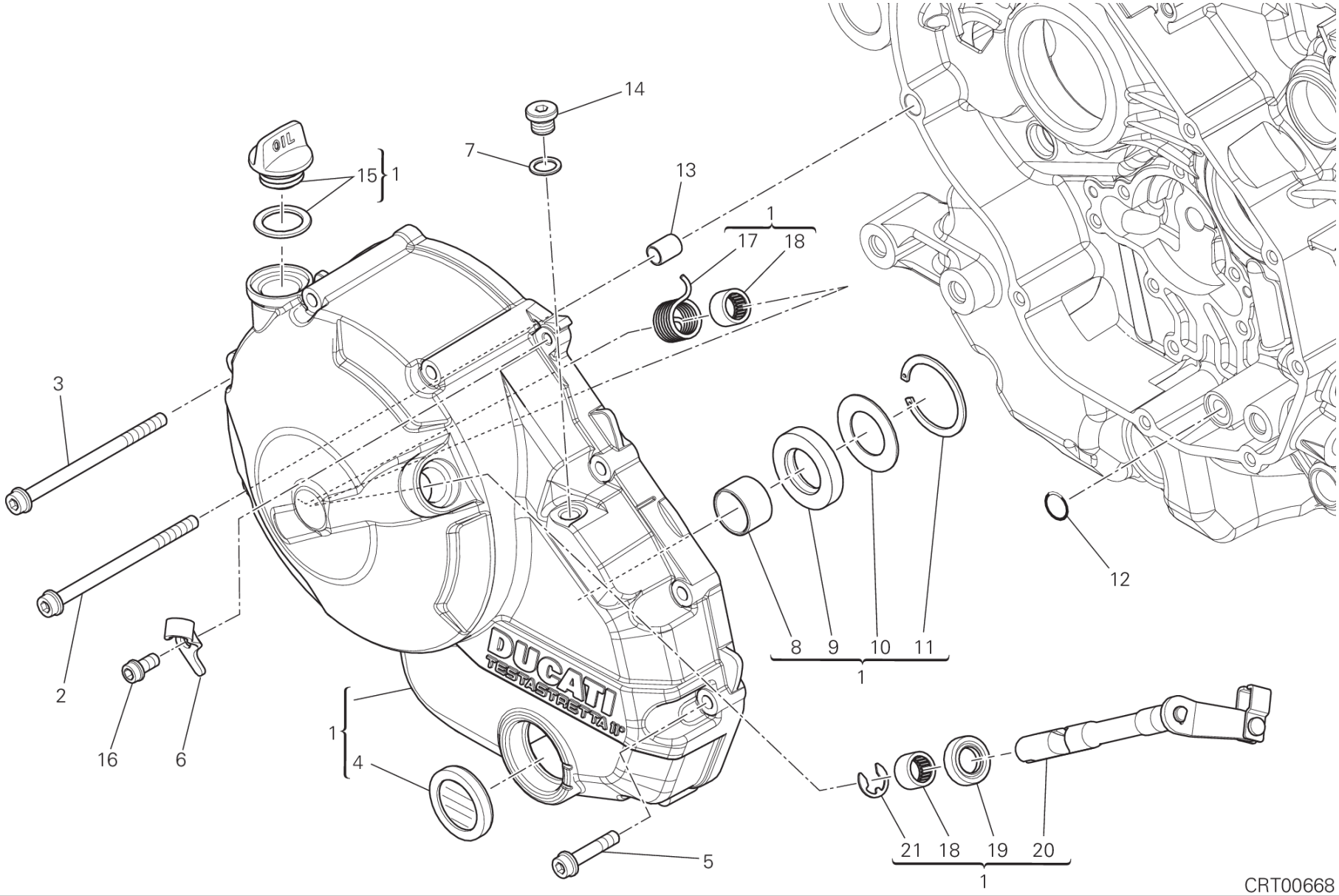
14
7
13
15
1
1
17
18
3
2
16
6
1
4
5
8
9
10
11
1
12
21
18
19
20
1
CRT00668

DRAWING 005 - CLUTCH COVER [MOD:M 821]

GROUP ENGINE

POS.	CODE	DESCRIPTION	QTY	START DATE	END DATE	VALIDITY	NOTES
1	24321391AC	CLUTCH COVER	1	17/07/2013			
2	77140833C	SCREW TCEIF M6X90 10.9	1	19/09/2011			
3	77140813C	SCREW TCEIF M6X80 10.9	3	19/09/2011			
4	25440012A	WINDOW, OIL LEVEL CHECK	1	17/01/2013			
5	77140713C	SCREW TCEIF M6X30 10.9	6	19/09/2011			
6	74113331AA	PLATE	1	05/05/2014			
7	85250241A	WASHER 10X14X1	1	19/09/2011			
8	066549680	BUSH	1	17/01/2013			
9	93040211A	OIL SEAL	1	17/01/2013			
10	85211351A	THRUST WASHER 20.8X37.8X1	1	17/01/2013			
11	88450131A	CIRCLIP	1	17/01/2013			
12	88641321A	O-RING 11.11X1.78	1	19/09/2011			
13	71111601A	PIN DOWEL	1	19/09/2011			
14	78050012A	PLUG, THREADED M10X1	1	19/09/2011			
15	89320121A	PLUG ASSY	1	17/01/2013			
16	77156633B	SCREW	1	20/01/2013			
17	79915671A	SPRING	1	17/01/2013			
18	70140431A	NEEDLE BUSH	2	17/01/2013			
19	93041591A	SEAL RING	1	17/01/2013			
20	14720921D	LEVER, CLUTCH LIFTER	1	17/01/2013			
21	88450341B	SPRING RING	1	17/01/2013			

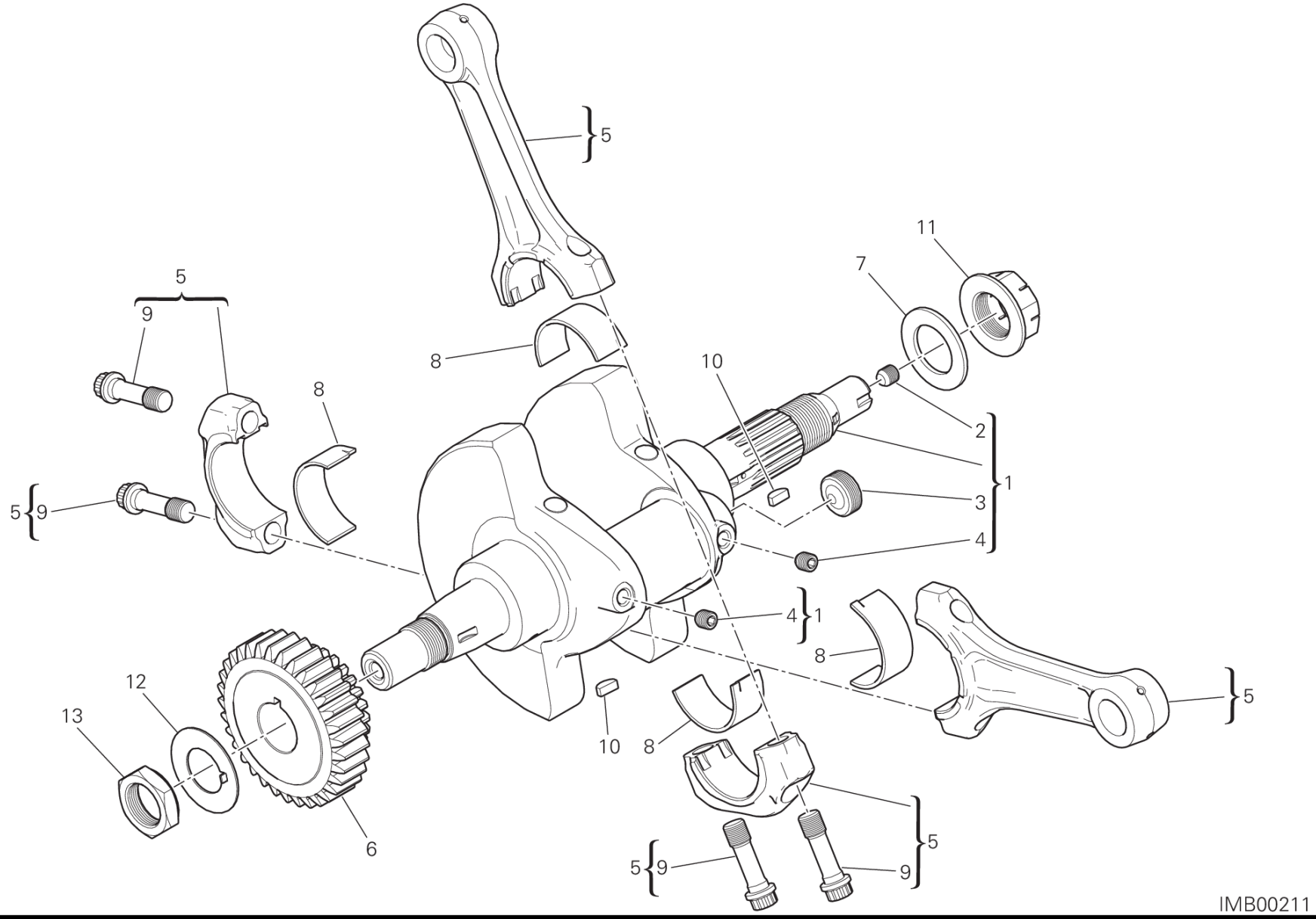
5
5
9
8
8
10
11
7
2
1
3
4
5
9
4
1
8
5
12
13
10
8
6
5
9
9
IMB00211

POS.	CODE	DESCRIPTION	QTY	START DATE	END DATE	VALIDITY	NOTES
1	14621982AA	DRIVE SHAFT COMPLETO (Class A)	1	11/06/2014			
	14621982AB	DRIVE SHAFT COMPLETO (Class B)	1	11/06/2014			
	14621982AC	DRIVE SHAFT COMPLETO (Class C)	1	11/06/2014			
2	77911092A	SCREW, SPECIAL	1	14/09/2012			
3	78010161A	THREADED PLUG M20X1	1	14/09/2012			
4	77915471A	THREADED DOWEL STEI M8X8	2	14/09/2012			
5	15620821AA	CONNECTING ROD (Class 1)	2	18/07/2013			
	15620821AB	CONNECTING ROD (Class 2)	2	29/01/2014			
	15620821AC	CONNECTING ROD (Class 3)	2	28/01/2014			
6	17010511A	GEAR, PRIMARY DRIVE T25/33	1	05/07/2012			
7	85212691A	WASHER	1	01/01/2013			
8	11210801AA	HALF-BEARING RED	2	02/12/2011			
	11210801AB	HALF-BEARING BLUE	2	02/12/2011			
9	77914041A	BOLT, CONNECTING ROD	4	18/07/2011			
10	68010131A	KEY, WOODRUFF 4X5X10	2	19/09/2011			
11	75010121D	NUT, SPECIAL	1	01/01/2013			
12	85110191A	WASHER, LOCK	1	19/09/2011			
13	75011611A	NUT	1	19/09/2011			

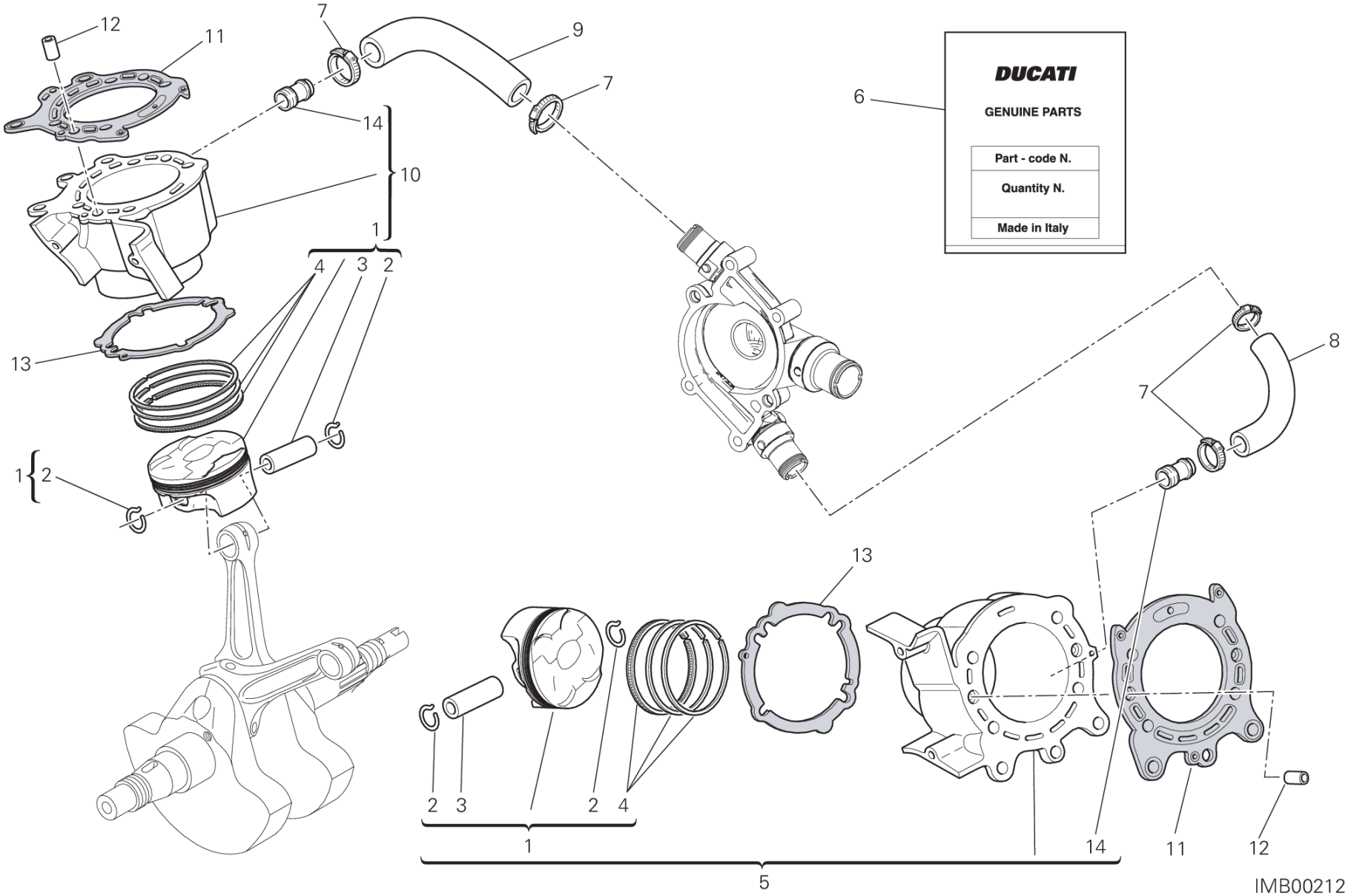
12
11
7
9
7
14
10
1
4
3
2
13
1
2
6
DUCATI
GENUINE PARTS
Part - code N.
Quantity N.
Made in Italy
8
7
13
2
3
2
4
1
14
11
12
5
IMB00212

DRAWING 007 - CYLINDERS - PISTONS [MOD:M 821]

GROUP ENGINE

POS.	CODE	DESCRIPTION	QTY	START DATE	END DATE	VALIDITY	NOTES
1	12221876A	PISTON ASSY	2	18/07/2012			
2	12111741B	CIRCLIP, PISTON PIN	4	18/07/2012			
3	12112921C	PISTON PIN	2	18/07/2012			
4	12120531B	PISTON RING SET	2	18/07/2012			
5	12021942BA	HORIZONTAL CYLINDER-PISTON ASSY	1	17/07/2013			
6	79120521B	GASKETS SET	1	17/07/2013			
7	74141921A	CLAMP 16-27 MM	4	01/09/2012			
8	80011851A	HOSE, HORIZONTAL CYLINDER WATER INLET	1	17/07/2013			
9	80011841A	HOSE, VERTICAL CYLINDER WATER INLET	1	17/07/2013			
10	12021952AA	VERTICAL CYLINDER-PISTON ASSY	1	17/07/2013			
11	78611224A	GASKET, CYLINDER HEAD	2	17/09/2012			
12	71112191A	PIN DOWEL	4	19/09/2011			
13	78611251A	GASKET, CYLINDER	2	19/09/2011			
14	66810481A	WATER PUMP DELIVERY PIPE UNION	2	28/10/2011			

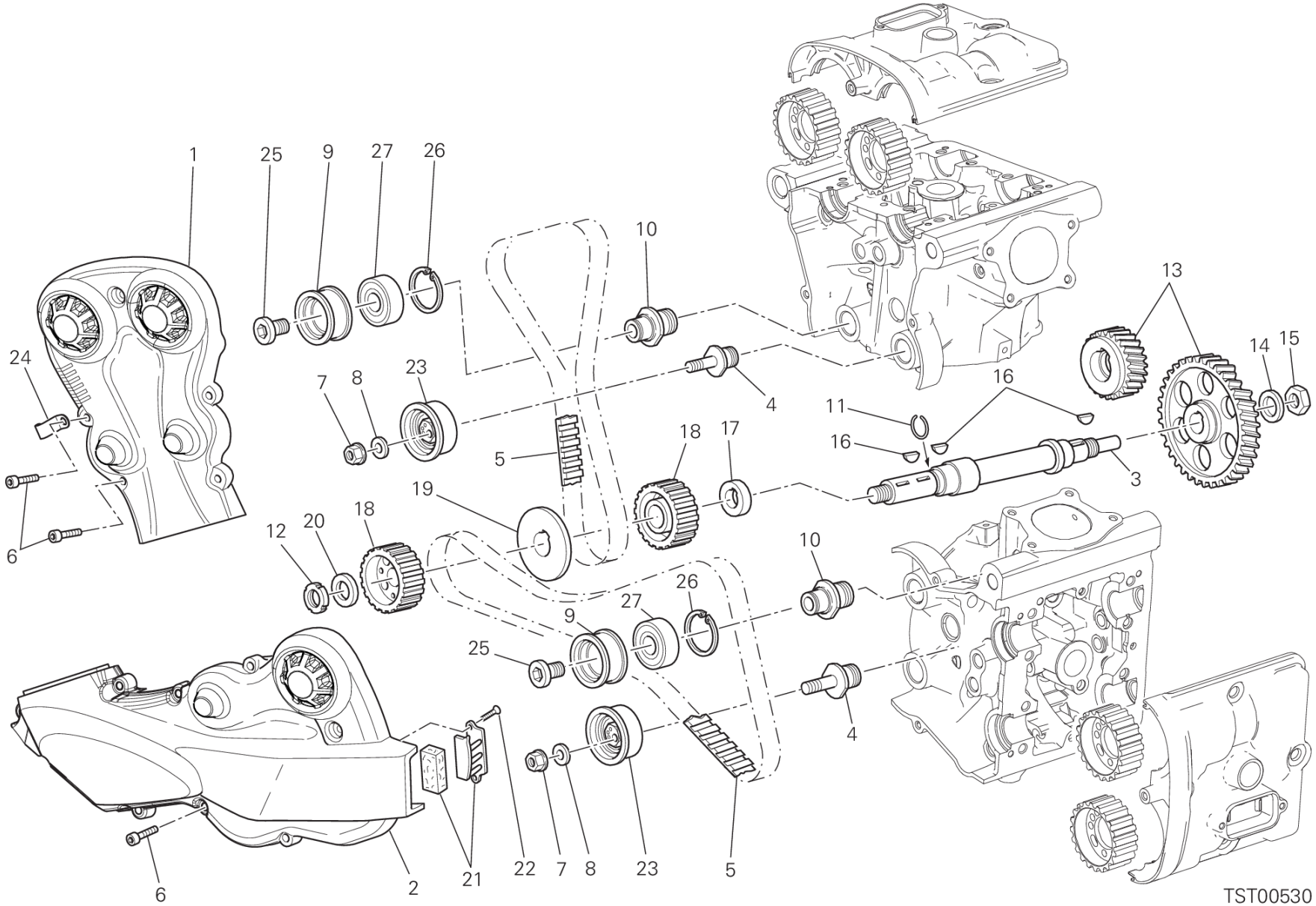
1
25
9
27
26
10
13
14
15
24
7
8
23
4
16
11
18
17
16
5
3
19
12
20
18
10
26
27
9
25
4
6
2
21
22
7
8
23
5
TST00530

POS.	CODE	DESCRIPTION	QTY	START DATE	END DATE	VALIDITY	NOTES
1	24511421A	VERTICAL BELT OUTER COVER	1	17/07/2013	14/07/2014		
2	24511431A	HORIZONTAL BELT EXTERNAL COVER	1	06/06/2013			
3	14710811A	LAYSHAFT TIMING	1	19/09/2011			
4	45110461A	TENSIONER ROLLER PIN	2	05/12/2012			
5	73740311A	TIMING DRIVE TOOTHED BELT	2	23/01/2012			
6	77113801A	SCREW	11	19/09/2011			
7	74940081A	NUT M8	2	19/09/2011			
8	85310021A	SPRING WASHER 8 MM	2	01/01/2012			
9	45110182A	SPINDLE, TAPER	2	24/12/2009			
10	45110491A	TENSIONER ROLLER PIN	2	05/12/2012			
11	88210031A	SNAP RING	1	19/09/2011			
12	70350062A	ELASTIC-STOP RING NUT	1	19/09/2011			
13	17122271A	TIMING GEARS SET	1	19/09/2011			
14	85110131A	WASHER, LOCK	1	19/09/2011			
15	75011601A	NUT M14X1X7	1	19/09/2011			
16	68010131A	KEY, WOODRUFF 4X5X10	3	19/09/2011			
17	71611281A	SPACER	1	19/09/2011			
18	25510104B	PULLEY, TIMING BELT	2	19/09/2011			
19	85610623A	WASHER, BELT PULLEY	1	17/09/2012			
20	71610722A	SPACER	1	19/09/2011			
21	24521071A	BRACKET, FILTER	1	06/06/2013			
22	77250341C	SCREW	2	31/05/2012			
23	45120241A	COMPLETE MOVABLE TENSIONER ROLLER	2	16/04/2013			
24	74113321A	CLAMP	1	05/05/2014			
25	77911871A	SCREW	2	19/09/2011			
26	735033804	CIRCLIP	2	24/12/2009			
27	70240581A	BEARING	2	24/12/2009			

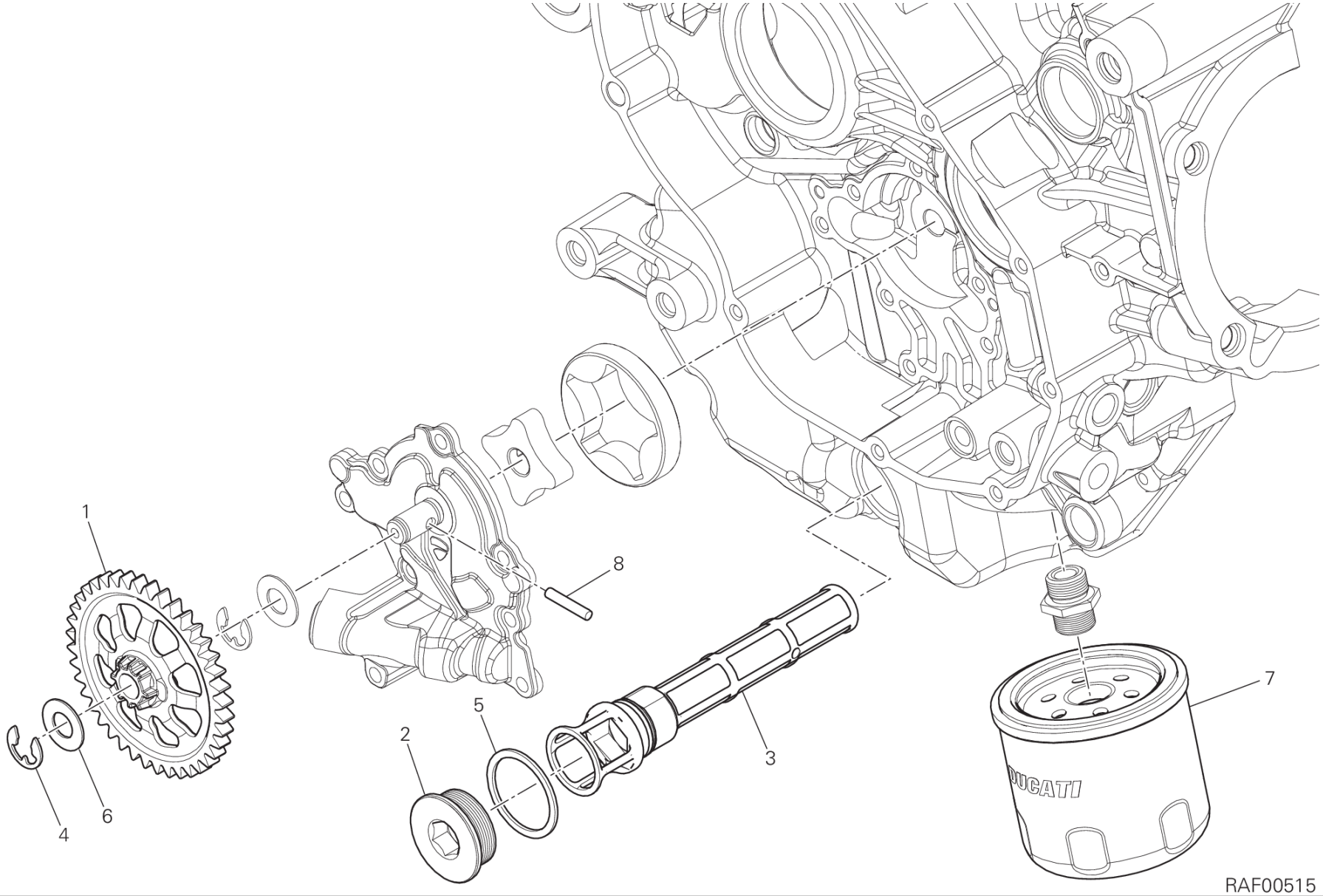
1
2
3
4
5
6
7
8
DUCATI
RAF00515

DRAWING 009 - FILTERS AND OIL PUMP [MOD:M 821]

GROUP ENGINE

POS.	CODE	DESCRIPTION	QTY	START DATE	END DATE	VALIDITY	NOTES
1	17410621B	OIL PUMP	1	29/01/2014			
2	87310371A	THREADED PLUG M32X1.5	1	19/09/2011			
3	89420121E	OIL NET FILTER	1	02/06/2014			
4	88450371A	SNAP RING	1	20/02/2014			
5	85250051A	GASKET 32X38X1.5	1	19/09/2011			
6	85213021A	WASHER, THRUST	1	20/02/2014			
7	44440035A	FILTER, OIL	1	19/09/2011			
8	70450091A	ROLLER	1	20/02/2014			

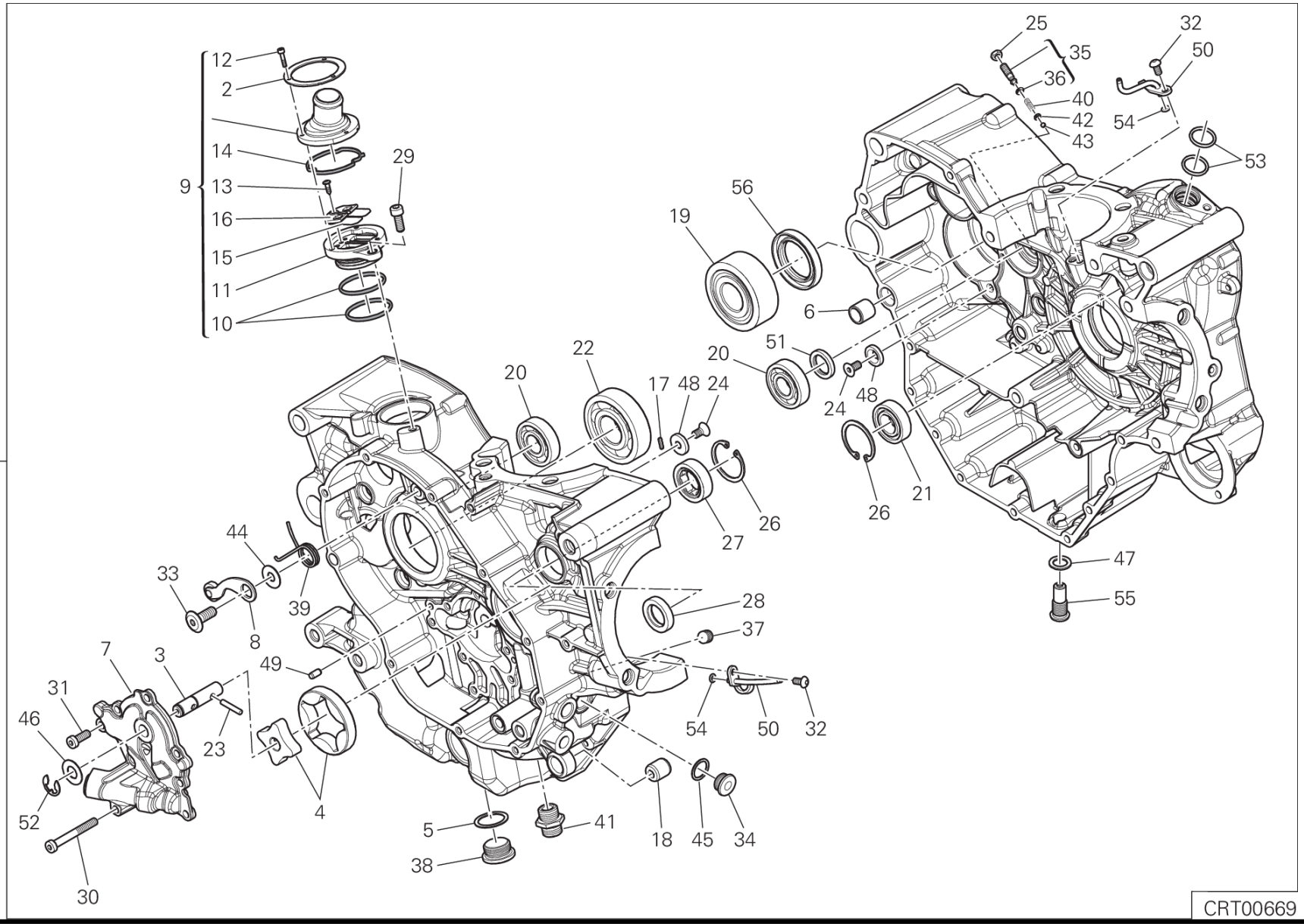
1
12
2
14
9
13
16
15
11
10
29
25
35
36
40
42
43
32
50
54
53
56
19
6
51
20
24
48
21
26
22
17
27
44
33
39
8
28
37
47
55
7
3
31
46
49
23
4
52
30
5
38
41
18
45
34
CRT00669

POS.	CODE	DESCRIPTION	QTY	START DATE	END DATE	VALIDITY	NOTES
1	225Z0071B	COMPLETE HALF-CRANKCASES PAIR	1	01/06/2014			
2	85213011A	RING	1	15/10/2010			
3	14710951B	OIL PUMP DRIVE SHAFT	1	20/02/2014			
4	17420591A	OIL PUMP ROTOR	1	04/04/2014			
5	22032083A	GASKET, ALUMINIUM 28X22.5X1	1	04/02/2014			
6	71110951A	PIN DOWEL	2	07/11/2011			
7	24724612A	OIL PUMP COVER	1	04/04/2014			
8	45520181A	GEAR FIXING CLICK ASSEMBLY	1	23/09/2011			
9	59320581B	VALVE, BREATHER	1	04/04/2014			
10	46320222A	O-RING	2	02/04/2010			
11	59310601B	HOLDER READ VALVE	1	02/04/2010			
12	77150078B	SCREW	3	07/12/2010			
13	77250341B	SCREW, TAPPING 3.5X12	1	02/04/2010			
14	78811151A	GASKET	1	02/04/2010			
15	81110021A	REED VALVE ASSY	1	02/04/2010			
16	82716031A	SPACER	1	02/04/2010			
17	68050101A	KEY 2X2X10	1	23/09/2011			
18	70010361A	DAMPER	1	23/09/2011			
19	70240131D	BEARING	1	04/02/2014			
20	70240331A	BEARING 17X40X12	2	04/02/2014			
21	70250081A	BALL BEARING 6003 TN9 C3	1	04/02/2014			
22	70250193A	BEARING	1	23/09/2011			
23	70450091A	ROLLER	1	20/02/2014			
24	720941616	SCREW TSPEI M6X12	4	04/02/2014			
25	74710151A	NUT	1	04/04/2014			
26	735033380	CIRCLIP	2	04/02/2014			
27	757941542	BEARING	1	04/02/2014			
28	93041231A	SEAL, OIL 18X30X6	1	04/02/2014			
29	77150653B	SCREW TCEI M6X16 UNI5931 8.8	1	04/02/2014			
30	77150758B	SCREW	1	20/02/2014			
31	77350658B	SCREW TCEIR M6X16	7	20/02/2014			
32	77510311B	SCREW TBEI M5X10	2	23/09/2011			
33	77910391A	SCREW M8X21.5	1	04/02/2014			
34	77911982A	THREADED PLUG M15X1	1	04/02/2014			
35	77927171A	SCREW	1	04/04/2014			

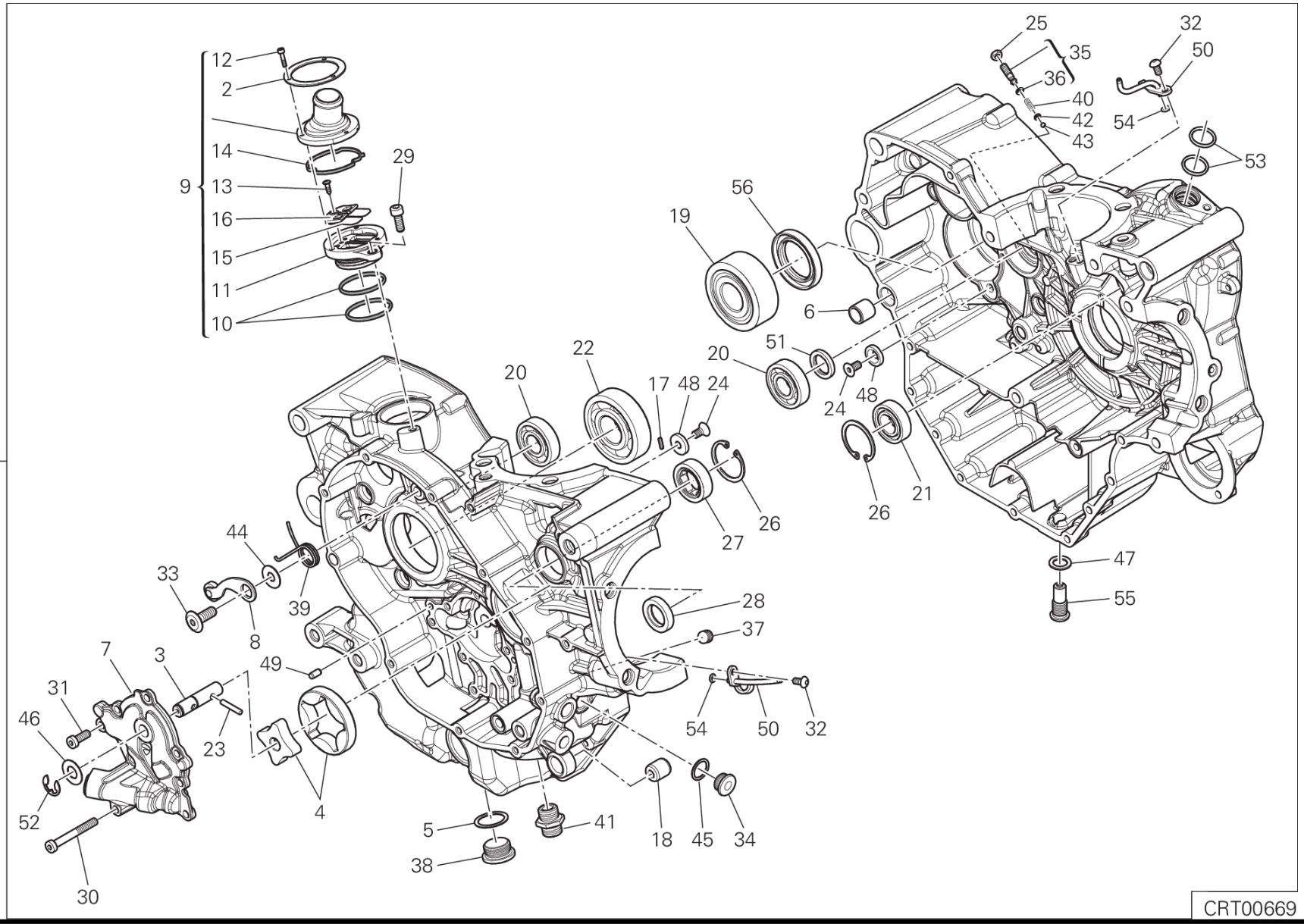
1
2
3
4
5
6
7
8
9
10
11
12
13
14
15
16
17
18
19
20
21
22
23
24
25
26
27
28
29
30
31
32
33
34
35
36
37
38
39
40
41
42
43
44
45
46
47
48
49
50
51
52
53
54
55
56
CRT00669

POS.	CODE	DESCRIPTION	QTY	START DATE	END DATE	VALIDITY	NOTES
36	88641961A	O-RING	1	18/04/2011			
37	77950621A	THREADED DOWEL M10X1	1	23/09/2011			
38	78010921A	PLUG	1	04/02/2014			
39	79910491A	SPRING, RETURN	1	04/02/2014			
40	79940171A	SPRING	1	04/02/2014			
41	81510281A	BOLT UNION	1	04/02/2014			
42	83110151B	PLATE	1	04/02/2014			
43	84740061A	BALL	1	04/02/2014			
44	85210532A	WASHER 8.2X20X1	1	04/02/2014			
45	85211201A	ALUMINIUM GASKET	1	04/02/2014			
46	85213021A	WASHER, THRUST	1	20/02/2014			
47	85250421A	COPPER GASKET 12.2X18X1.5 MM	1	04/02/2014			
48	85611481A	WASHER	4	04/02/2014			
49	86050061A	PIN M5X10	2	04/02/2014			
50	87511801A	JET, PISTON COOLING	2	04/02/2014			
51	93040931A	SEAL, OIL 17X25X4	1	04/02/2014			
52	88450371A	SNAP RING	1	20/02/2014			
53	88640331A	O-RING 17.96X2.62	2	04/02/2014			
54	88650131A	O-RING 3.68X1.78	2	04/02/2014			
55	89320062A	PLUG, OIL DRAIN	1	04/02/2014			
56	93040221A	SEAL, OIL 35X52X7	1	04/02/2014			

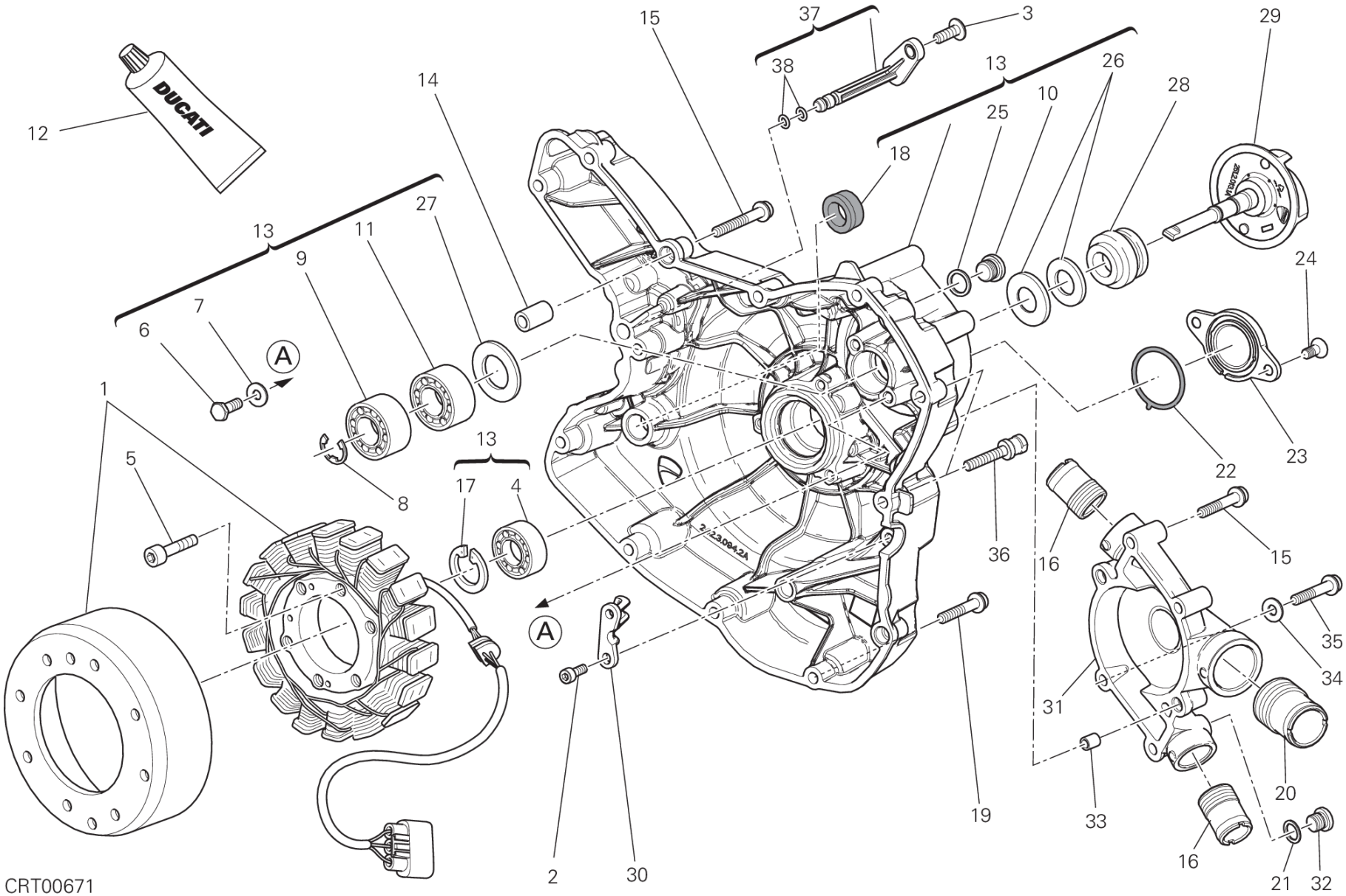
DUCATI
12
13
14
15
37
3
38
13
26
29
28
10
25
18
27
11
9
7
6
A
1
5
8
13
17
4
24
22
23
36
16
15
35
34
31
20
33
19
16
21
32
2
30
A
CRT00671

POS.	CODE	DESCRIPTION	QTY	START DATE	END DATE	VALIDITY	NOTES
1	26420501A	GENERATOR "FERRITE"	1	20/06/2013			
2	77150408B	SCREW TCEI M5X14	2	06/06/2012			
3	77240423C	SCREW TBEIF M6X16 10.9	1	17/07/2013			
4	70250081A	BALL BEARING 6003 TN9 C3	1	01/05/2010			
5	77150738B	SCREW TCEI M6X40	3	06/06/2012			
6	77052508B	SCREW TE M6X16	2	01/05/2010			
7	85211721A	WASHER 6X14.2X1.3	2	01/05/2010			
8	88450431A	CIRCLIP	1	01/05/2010			
9	70240102A	BEARING	1	01/05/2010			
10	77910262A	SCREW M12X1	1				
11	70240091A	BALL BEARING 6000	1	01/05/2010			
12	942470014	LIQUID GASKET	1	20/02/2012			
13	24221181AB	COMPLETE GENERATOR COVER	1	18/02/2013			
14	71111601A	PIN DOWEL	2	20/02/2012			
15	77140723C	SCREW TCEIF M6X35 10.9	4	27/02/2012			
16	66810014A	WATER PUMP DELIVERY PIPE UNION	2	06/06/2012			
17	735033380	CIRCLIP	1	06/06/2012			
18	937831524	SEAL, OIL 15X24X6	1	18/04/2012			
19	77140713C	SCREW TCEIF M6X30 10.9	9	20/02/2012			
20	66810024A	NIPPLE, HOSE	1	06/06/2012			
21	85250241A	WASHER 10X14X1	1	06/06/2012			
22	88610951A	O-RING 32.99X2.62	1	20/02/2012			
23	24713571AH	COVER	1	18/02/2013			
24	77750493C	SCREW	2	20/02/2012			
25	85250261A	GASKET, ALUMINIUM 12X16X1.5	1	06/06/2012			
26	93050051A	MECHANICAL SEAL	1	06/06/2012			
27	71311281B	SPACER	1	06/06/2012			
28	93050062B	MECHANICAL SEAL	1	06/06/2012			
29	25120131A	WATER PUMP ROTOR	1	06/06/2012			
30	83015581B	BRACKET	1	06/06/2012			
31	24714481A	WATER PUMP COVER ASSY	1	06/06/2012			
32	78050012A	PLUG, THREADED M10X1	1	06/06/2012			
33	71110922A	BUSH	2	06/06/2012			
34	85250481A	GASKET 6X12X1 DIN7603-A	2	06/06/2012			
35	77113961A	SCREW	2	20/02/2012			

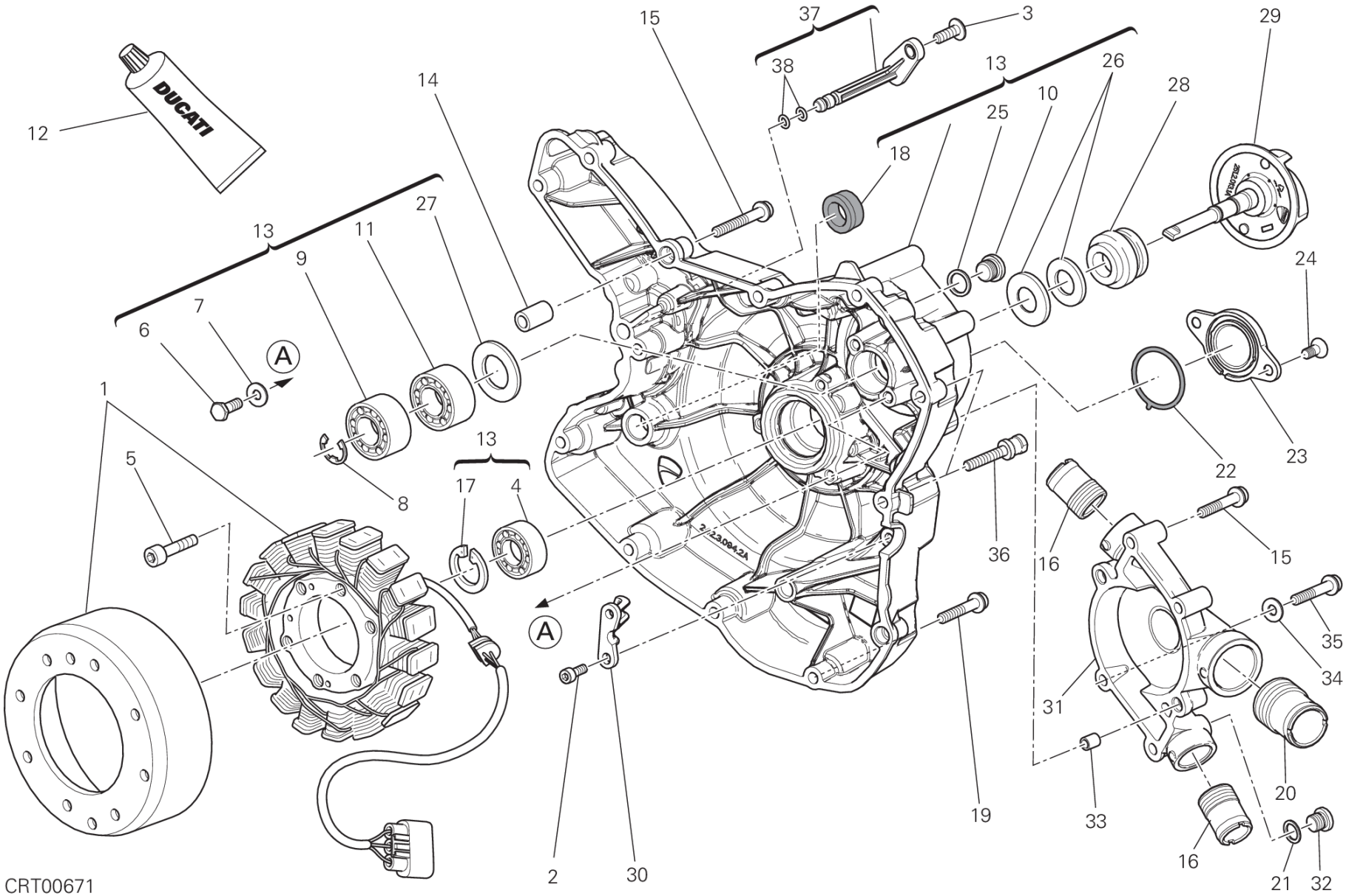
DUCATI
12
13
14
15
37
3
38
13
26
29
28
10
25
18
27
11
9
7
6
A
1
5
8
13
17
4
24
22
23
36
16
15
35
34
31
20
33
19
16
21
32
2
30
A
CRT00671

POS.	CODE	DESCRIPTION	QTY	START DATE	END DATE	VALIDITY	NOTES
36	77916311A	SCREW, SPECIAL	2	08/03/2013			
37	87321271A	PLUG	1	17/07/2013			
38	88641731A	O-RING 1.78X4.76	2	17/07/2013			

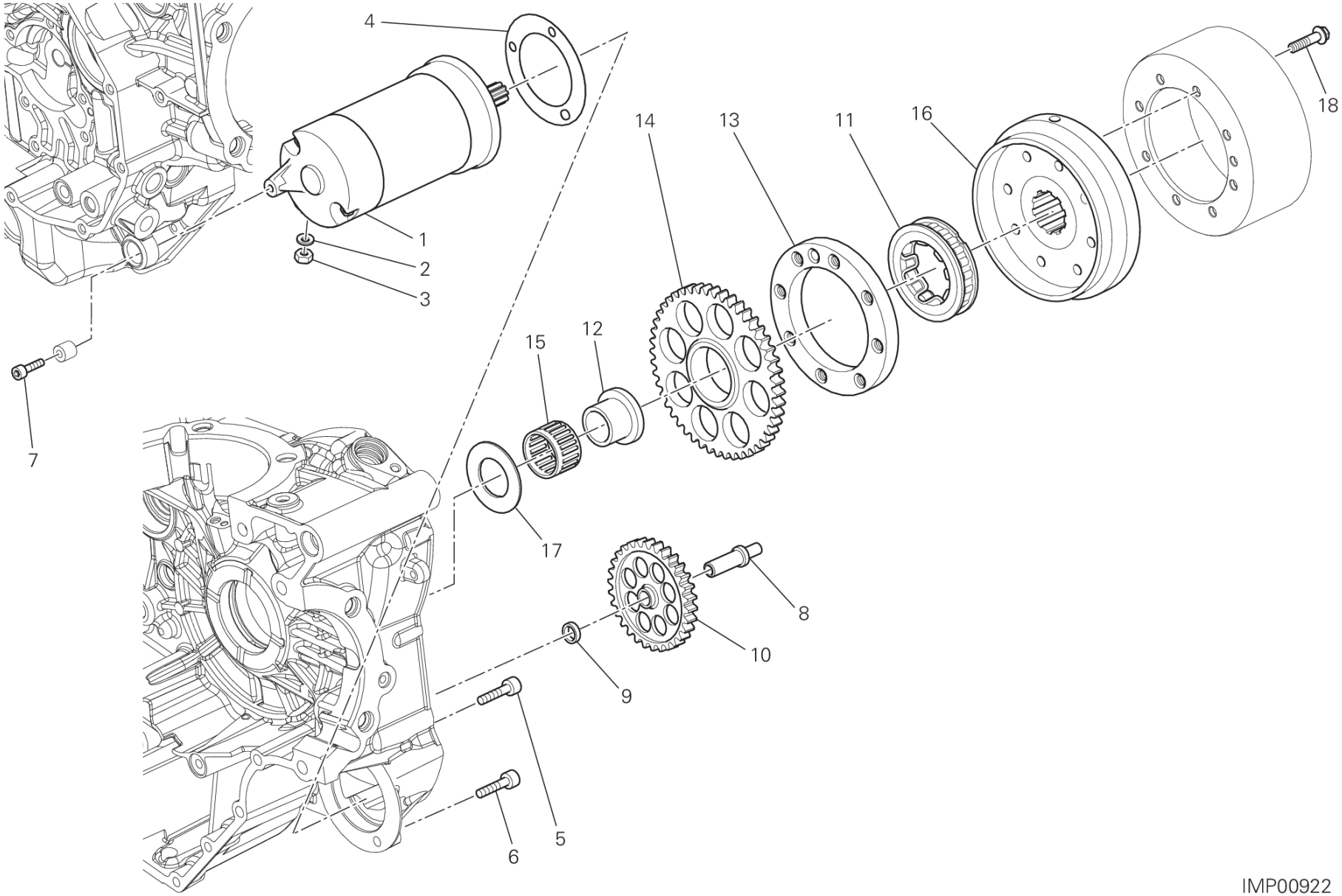
4
1
2
3
7
14
13
11
16
18
15
12
17
8
10
9
5
6
IMP00922

POS.	CODE	DESCRIPTION	QTY	START DATE	END DATE	VALIDITY	NOTES
1	27040127A	STARTING MOTOR	1	15/10/2012			
2	85310031A	SPRING WASHER 6 MM	1	15/11/2012			
3	75050051A	NUT 6MM	1	05/05/2014			
4	78810542A	ENGINE STARTER GASKET	1	19/09/2011			
5	77113861A	SCREW	2	16/04/2013			
6	77110518B	SCREW TCEI M6X25	1	19/09/2011			
7	77110521A	SCREW TCEI M6X30	1	19/09/2011			
8	82113471A	STARTER REDUCTION SHAFT	1	19/09/2011			
9	71319191A	SPACER	1	19/09/2011			
10	176Z0021A	IDLE GEAR T74/13	1	19/09/2011			
11	70140411A	CLUTCH, ONE WAY	1	19/09/2011			
12	88110101C	BUSH	1	19/09/2011			
13	16010571A	FLANGE STARTING CLUTCH	1	16/04/2013			
14	17310291A	ELECTRIC STARTER DRIVEN GEAR	1	19/09/2011			
15	70140031A	BEARING, NEEDLE	1	19/09/2011			
16	276Z0021A	IGNITION FLYWHEEL	1	19/09/2011			
17	061950065	THRUST WASHER 35.5X48	1	19/09/2011			
18	77253330ZF	SCREW	8	17/07/2013			

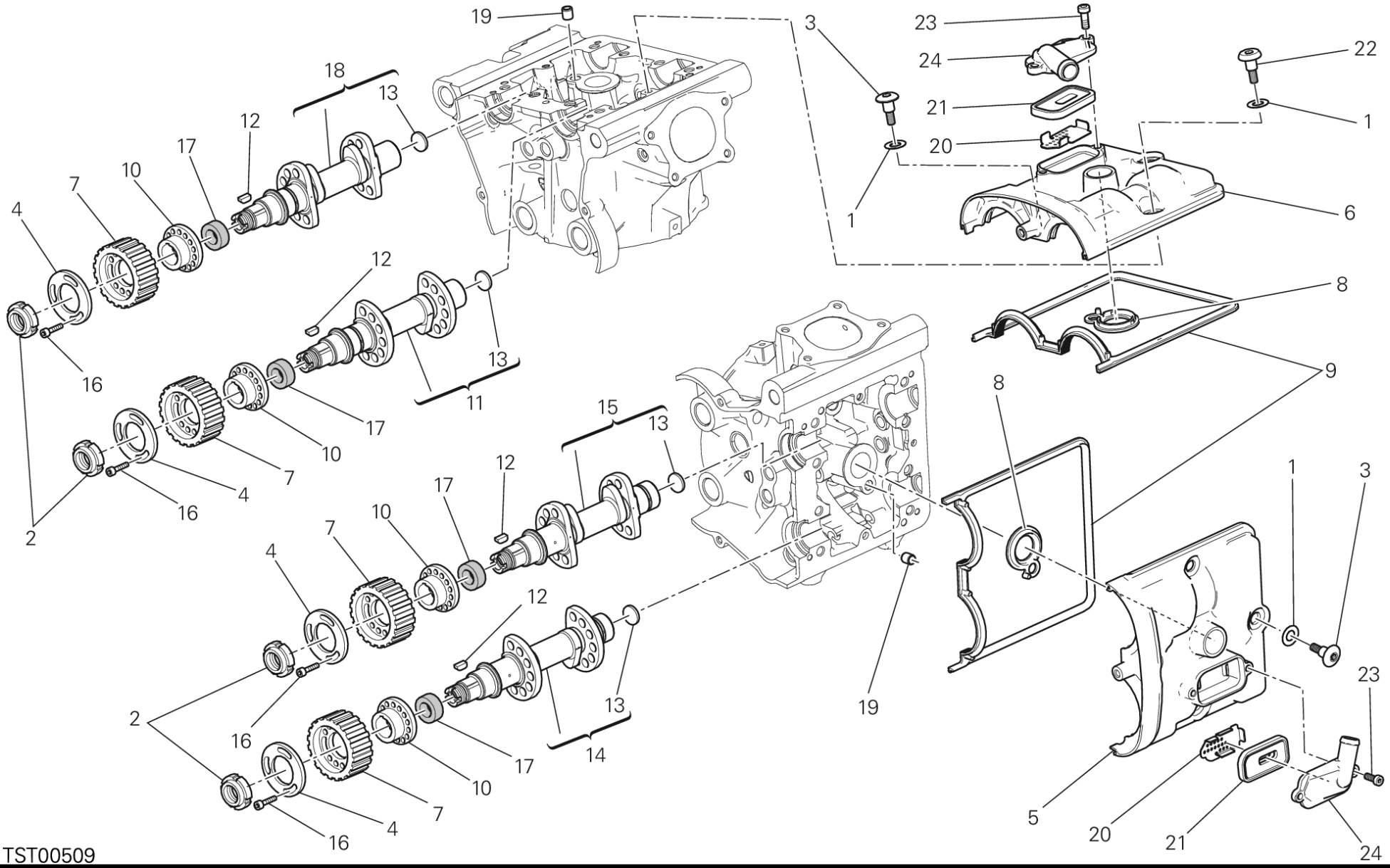
19
3
23
24
21
20
22
1
6
18
13
12
17
10
7
4
16
2
11
15
14
8
9
5
TST00509

POS.	CODE	DESCRIPTION	QTY	START DATE	END DATE	VALIDITY	NOTES
1	88650511A	O-RING 12.39X3.53	8	07/12/2012			
2	70350022A	RING NUT M17X1	4	07/12/2012			
3	77915093A	SCREW, SPECIAL	5	07/12/2012			
4	85610743A	WASHER, SPECIAL	4	07/12/2012			
5	24714141AC	COVER CYLINDER HEAD, HORIZONTAL	1	31/05/2013			
6	24714151AC	COVER CYLINDER HEAD, VERTICAL	1	31/05/2013			
7	25510193A	TIMING BELT PULLEY, DRIVEN T20	4	07/12/2012			
8	78811211A	GASKET	2	07/12/2012			
9	78810931A	GASKET CYLINDER HEAD COVER	2	07/12/2012			
10	16010941A	SPACER	4	07/12/2012			
11	14824232A	VERTICAL INTAKE CAMSHAFT	1	01/07/2013			
12	68050061A	WOODRUFF KEY 3X5	4	07/12/2012			
13	87310051A	PLUG 18 MM	4	24/12/2009			
14	14824242A	HORIZONTAL EXHAUST CAMSHAFT	1	01/07/2013			
15	14824222A	HORIZONTAL INTAKE CAMSHAFT	1	01/07/2013			
16	77950302A	SCREW TC M6X12	12	07/12/2012			
17	93050071A	SEAL, OIL BAVISLRSX7 24-35-7	4	07/12/2012			
18	14824252A	VERTICAL EXHAUST CAMSHAFT	1	01/07/2013			
19	71113741A	BUSH	2	07/12/2012			
20	82716351A	PLATE	2	07/12/2012			
21	81140012B	VALVE	2	07/12/2012			
22	77918141A	SCREW, SPECIAL	3	11/06/2013			
23	77350403B	SCREW	4	07/12/2012			
24	24714171A	COVER	2	07/12/2012			

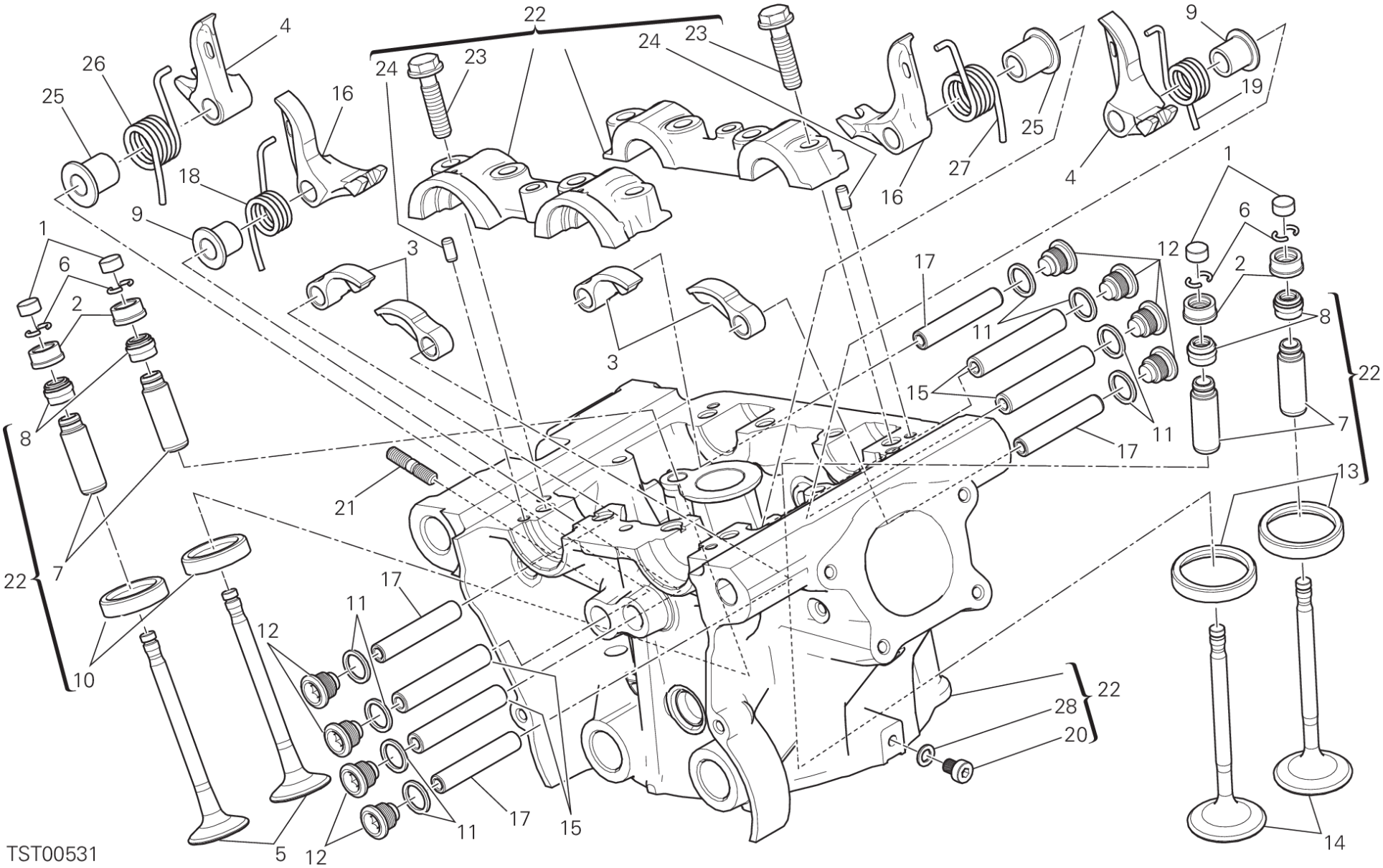
22
4
26
25
16
24
23
24
23
9
19
25
27
16
4
18
9
1
6
2
3
3
17
12
11
15
11
17
1
6
2
8
22
7
13
8
7
22
21
10
17
11
12
22
28
20
17
15
11
12
5
14
TST00531

POS.	CODE	DESCRIPTION	QTY	START DATE	END DATE	VALIDITY	NOTES
1	84010012A	ADJUSTER, OPENING ROCKER ARM 2.00 MM	4	20/06/2012			
	84010022A	ADJUSTER, OPENING ROCKER ARM 2.05 MM	4	20/06/2012			
	84010032A	ADJUSTER, OPENING ROCKER ARM 2.10 MM	4	20/06/2012			
	84010042A	ADJUSTER, OPENING ROCKER ARM 2.15 MM	4	20/06/2012			
	84010052A	ADJUSTER, OPENING ROCKER ARM 2.20 MM	4	20/06/2012			
	84010062A	ADJUSTER, OPENING ROCKER ARM 2.25 MM	4	20/06/2012			
	84010072A	ADJUSTER, OPENING ROCKER ARM 2.30 MM	4	20/06/2012			
	84010082A	ADJUSTER, OPENING ROCKER ARM 2.35 MM	4	20/06/2012			
	84010092A	ADJUSTER, OPENING ROCKER ARM 2.40 MM	4	20/06/2012			
	84010102A	ADJUSTER, OPENING ROCKER ARM 2.45 MM	4	20/06/2012			
	84010112A	ADJUSTER, OPENING ROCKER ARM 2.50 MM	4	20/06/2012			
	84010122A	ADJUSTER, OPENING ROCKER ARM 2.55 MM	4	20/06/2012			
	84010132A	ADJUSTER, OPENING ROCKER ARM 2.60 MM	4	20/06/2012			
	84010142A	ADJUSTER, OPENING ROCKER ARM 2.65 MM	4	20/06/2012			
	84010152A	ADJUSTER, OPENING ROCKER ARM 2.70 MM	4	20/06/2012			
	84010162A	ADJUSTER, OPENING ROCKER ARM 2.75 MM	4	20/06/2012			
	84010172A	ADJUSTER, OPENING ROCKER ARM 2.80 MM	4	20/06/2012			
	84010182A	ADJUSTER, OPENING ROCKER ARM 2.85 MM	4	20/06/2012			
	84010192A	ADJUSTER, OPENING ROCKER ARM 2.90 MM	4	20/06/2012			
	84010202A	ADJUSTER, OPENING ROCKER ARM 2.95 MM	4	20/06/2012			
	84010212A	ADJUSTER, OPENING ROCKER ARM 3.00 MM	4	20/06/2012			
	84010222A	ADJUSTER, OPENING ROCKER ARM 3.05 MM	4	20/06/2012			
	84010232A	ADJUSTER, OPENING ROCKER ARM 3.10 MM	4	20/06/2012			
	84010242A	ADJUSTER, OPENING ROCKER ARM 3.15 MM	4	20/06/2012			
	84010252A	ADJUSTER, OPENING ROCKER ARM 3.20 MM	4	20/06/2012			
	84010262A	ADJUSTER, OPENING ROCKER ARM 3.25 MM	4	20/06/2012			
	84010272A	ADJUSTER, OPENING ROCKER ARM 3.30 MM	4	20/06/2012			
	84010282A	ADJUSTER, OPENING ROCKER ARM 3.35 MM	4	20/06/2012			
	84010292A	ADJUSTER, OPENING ROCKER ARM 3.40 MM	4	20/06/2012			
	84010302A	ADJUSTER, OPENING ROCKER ARM 3.45 MM	4	20/06/2012			
	84010312A	ADJUSTER, OPENING ROCKER ARM 1.80 MM	4	20/06/2012			
	84010322A	ADJUSTER, OPENING ROCKER ARM 1.85 MM	4	20/06/2012			
	84010332A	ADJUSTER, OPENING ROCKER ARM 1.90 MM	4	20/06/2012			
	84010342A	ADJUSTER, OPENING ROCKER ARM 1.95 MM	4	20/06/2012			
	84010722A	ADJUSTER, OPENING ROCKER ARM 3.60 MM	4	20/06/2012			

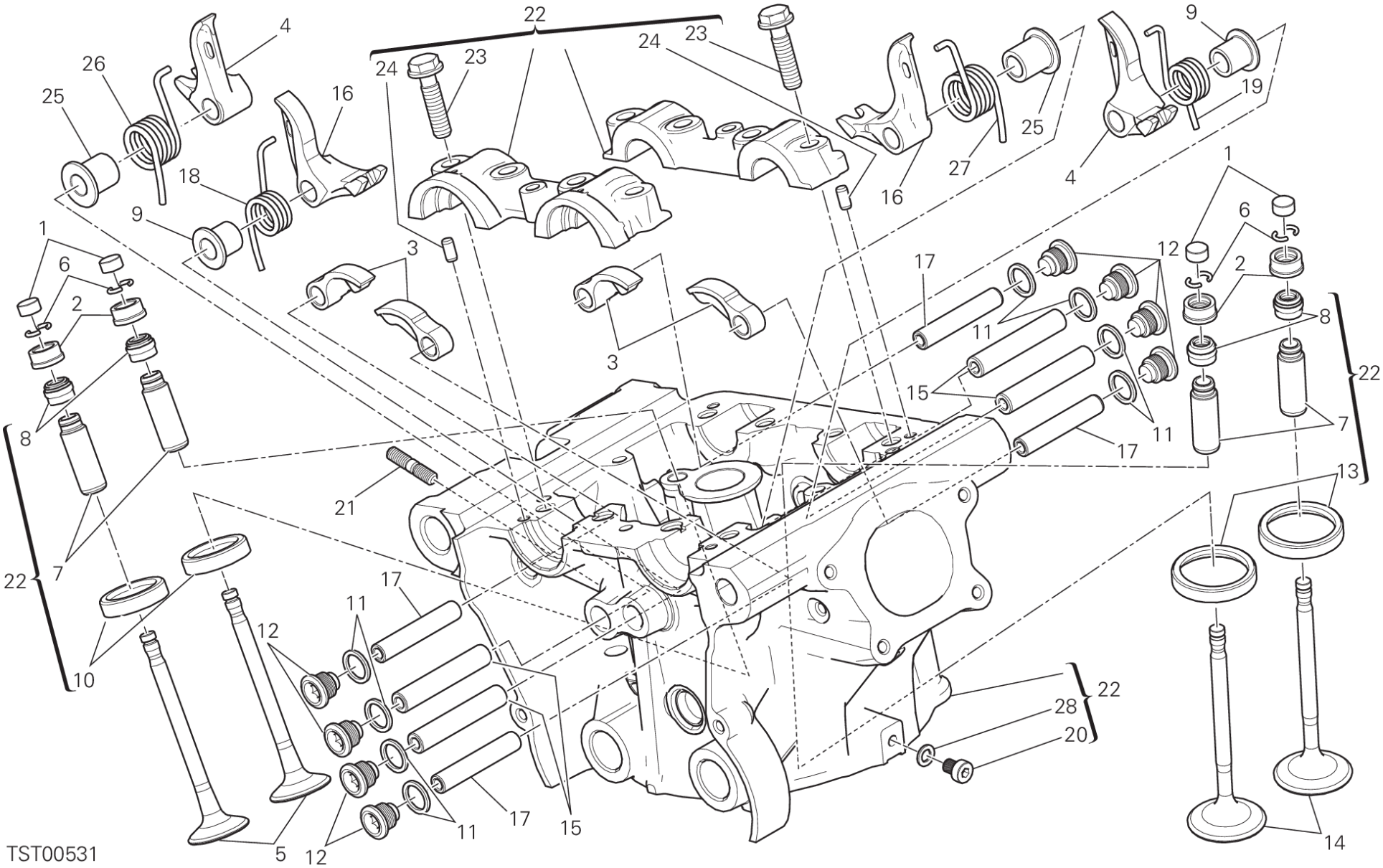
22
4
26
25
16
24
23
24
23
9
19
25
27
16
4
18
9
1
6
2
3
3
17
12
11
15
11
17
1
6
2
8
22
7
13
8
7
22
21
10
17
11
12
22
28
20
17
15
11
12
5
14
TST00531

POS.	CODE	DESCRIPTION	QTY	START DATE	END DATE	VALIDITY	NOTES
	84010732A	ADJUSTER, OPENING ROCKER ARM 3.80 MM	4	20/06/2012			
	84011082A	ADJUSTER, OPENING ROCKER ARM 3.50 MM	4	20/06/2012			
	84011092A	ADJUSTER, OPENING ROCKER ARM 3.55 MM	4	20/06/2012			
	84011102A	ADJUSTER, OPENING ROCKER ARM 3.65 MM	4	20/06/2012			
	84011112A	ADJUSTER, OPENING ROCKER ARM 3.70 MM	4	20/06/2012			
	84011122A	ADJUSTER, OPENING ROCKER ARM 3.75 MM	4	20/06/2012			
	84011132A	ADJUSTER, OPENING ROCKER ARM 3.85 MM	4	20/06/2012			
	84011142A	ADJUSTER, OPENING ROCKER ARM 3.9 MM	4	20/06/2012			
2	84010412B	ADJUSTER, CLOSING ROCKER ARM 2.20 MM	4	24/12/2009			
	84010422B	ADJUSTER, CLOSING ROCKER ARM 2.25 MM	4	24/12/2009			
	84010432B	ADJUSTER, CLOSING ROCKER ARM 2.30 MM	4	24/12/2009			
	84010442B	ADJUSTER, CLOSING ROCKER ARM 2.35 MM	4	24/12/2009			
	84010452B	ADJUSTER, CLOSING ROCKER ARM 2.40 MM	4	24/12/2009			
	84010462B	ADJUSTER, CLOSING ROCKER ARM 2.45 MM	4	24/12/2009			
	84010472B	ADJUSTER, CLOSING ROCKER ARM 2.50 MM	4	24/12/2009			
	84010482B	ADJUSTER, CLOSING ROCKER ARM 2.55 MM	4	24/12/2009			
	84010492B	ADJUSTER, CLOSING ROCKER ARM 2.60 MM	4	24/12/2009			
	84010502B	ADJUSTER, CLOSING ROCKER ARM 2.65 MM	4	24/12/2009			
	84010512B	ADJUSTER, CLOSING ROCKER ARM 2.70 MM	4	24/12/2009			
	84010522B	ADJUSTER, CLOSING ROCKER ARM 2.75 MM	4	24/12/2009			
	84010532B	ADJUSTER, CLOSING ROCKER ARM 2.80 MM	4	24/12/2009			
	84010542B	ADJUSTER, CLOSING ROCKER ARM 2.85 MM	4	24/12/2009			
	84010552B	ADJUSTER, CLOSING ROCKER ARM 2.90 MM	4	24/12/2009			
	84010562B	ADJUSTER, CLOSING ROCKER ARM 2.95 MM	4	24/12/2009			
	84010572B	ADJUSTER, CLOSING ROCKER ARM 3.00 MM	4	24/12/2009			
	84010582B	ADJUSTER, CLOSING ROCKER ARM 3.05 MM	4	24/12/2009			
	84010592B	ADJUSTER, CLOSING ROCKER ARM 3.10 MM	4	24/12/2009			
	84010602B	ADJUSTER, CLOSING ROCKER ARM 3.15 MM	4	24/12/2009			
	84010612B	ADJUSTER, CLOSING ROCKER ARM 3.20 MM	4	24/12/2009			
	84010622B	ADJUSTER, CLOSING ROCKER ARM 3.25 MM	4	24/12/2009			
	84010632B	ADJUSTER, CLOSING ROCKER ARM 3.30 MM	4	24/12/2009			
	84010642B	ADJUSTER, CLOSING ROCKER ARM 3.35 MM	4	24/12/2009			
	84010652B	ADJUSTER, CLOSING ROCKER ARM 3.40 MM	4	24/12/2009			
	84010662B	ADJUSTER, CLOSING ROCKER ARM 3.45 MM	4	24/12/2009			
	84010672B	ADJUSTER, CLOSING ROCKER ARM 3.50 MM	4	24/12/2009			

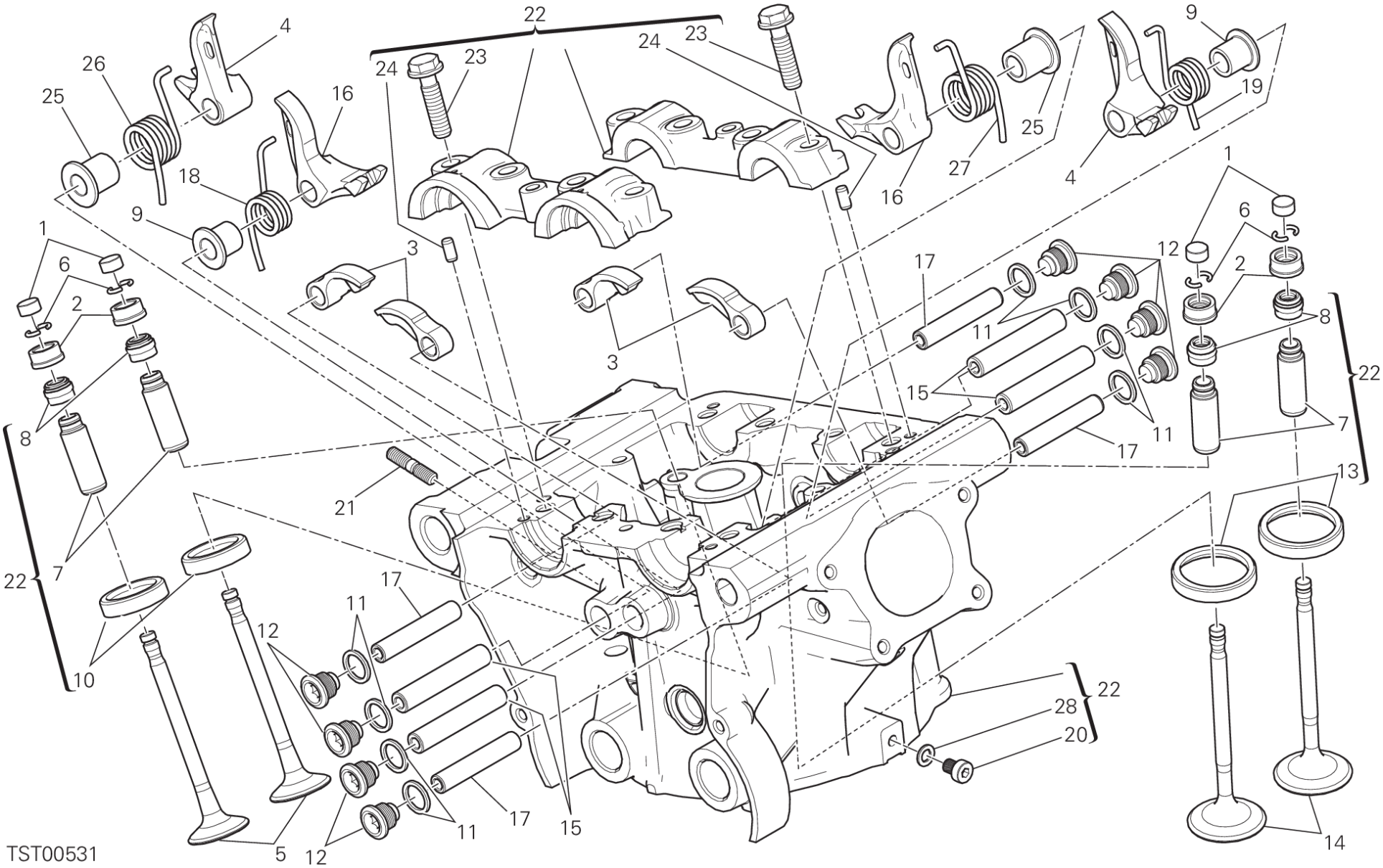
22
4
26
25
16
24
23
24
23
9
19
25
27
16
4
18
9
1
6
2
3
3
17
12
11
15
11
17
1
6
2
8
22
7
13
8
7
22
21
17
11
12
10
22
28
20
17
15
11
12
5
14
TST00531

POS.	CODE	DESCRIPTION	QTY	START DATE	END DATE	VALIDITY	NOTES
	84010682B	ADJUSTER, CLOSING ROCKER ARM 3.55 MM	4	24/12/2009			
	84010692B	ADJUSTER, CLOSING ROCKER ARM 3.60 MM	4	24/12/2009			
	84010702B	ADJUSTER, CLOSING ROCKER ARM 3.65 MM	4	24/12/2009			
	84010712B	ADJUSTER, CLOSING ROCKER ARM 3.70 MM	4	24/12/2009			
	84010722B	ADJUSTER, CLOSING ROCKER ARM 3.75 MM	4	24/12/2009			
	84010732B	ADJUSTER, CLOSING ROCKER ARM 3.80 MM	4	24/12/2009			
	84010742B	ADJUSTER, CLOSING ROCKER ARM 3.85 MM	4	24/12/2009			
	84010752B	ADJUSTER, CLOSING ROCKER ARM 3.90 MM	4	24/12/2009			
	84010762B	ADJUSTER, CLOSING ROCKER ARM 3.95 MM	4	24/12/2009			
	84010772B	ADJUSTER, CLOSING ROCKER ARM 4.00 MM	4	24/12/2009			
	84010782B	ADJUSTER, CLOSING ROCKER ARM 4.05 MM	4	24/12/2009			
	84010792B	ADJUSTER, CLOSING ROCKER ARM 4.10 MM	4	24/12/2009			
	84010802B	ADJUSTER, CLOSING ROCKER ARM 4.15 MM	4	24/12/2009			
	84010812B	ADJUSTER, CLOSING ROCKER ARM 4.20 MM	4	24/12/2009			
	84010822B	ADJUSTER, CLOSING ROCKER ARM 4.25 MM	4	24/12/2009			
	84010832B	ADJUSTER, CLOSING ROCKER ARM 4.30 MM	4	24/12/2009			
	84010842B	ADJUSTER, CLOSING ROCKER ARM 4.35 MM	4	24/12/2009			
	84010852B	ADJUSTER, CLOSING ROCKER ARM 4.40 MM	4	24/12/2009			
	84010862B	ADJUSTER, CLOSING ROCKER ARM 4.45 MM	4	24/12/2009			
	84010872B	ADJUSTER, CLOSING ROCKER ARM 4.50 MM	4	24/12/2009			
3	20810321A	OPEN. ROCKER ARM	4	07/12/2012			
4	20910501A	CLOSING ROCKER ARM LEFT	2	07/12/2012			
5	21110991A	EXHAUST VALVE	2	27/06/2013			
6	66910011E	C RING	8	07/12/2012			
7	30310631BB	GUIDE, VALVE OVERSIZED 0.03 MM	4	21/03/2013			
	30310631BC	GUIDE, VALVE OVERSIZED 0.06 MM	4	25/03/2013			
	30310631BD	GUIDE, VALVE OVERSIZED 0.09 MM	4	21/03/2013			
8	76410871A	SEAL VALVE STEM	4	03/04/2012			
9	71312921A	SPACER	2	07/12/2012			
10	30411011AB	SEAT, EXHAUST VALVE +0.03 MM	2	17/07/2013			
	30411011AC	SEAT, EXHAUST VALVE +0.06 MM	2	17/07/2013			
11	85250261B	GASKET, ALUMINIUM 12X16X1.5	8	07/12/2012			
12	78010511E	PLUG	8	07/12/2012			
13	30411001AB	SEAT, INLET VALVE +0.03 MM	2	17/07/2013			
	30411001AC	SEAT, INLET VALVE +0.06 MM	2	17/07/2013			

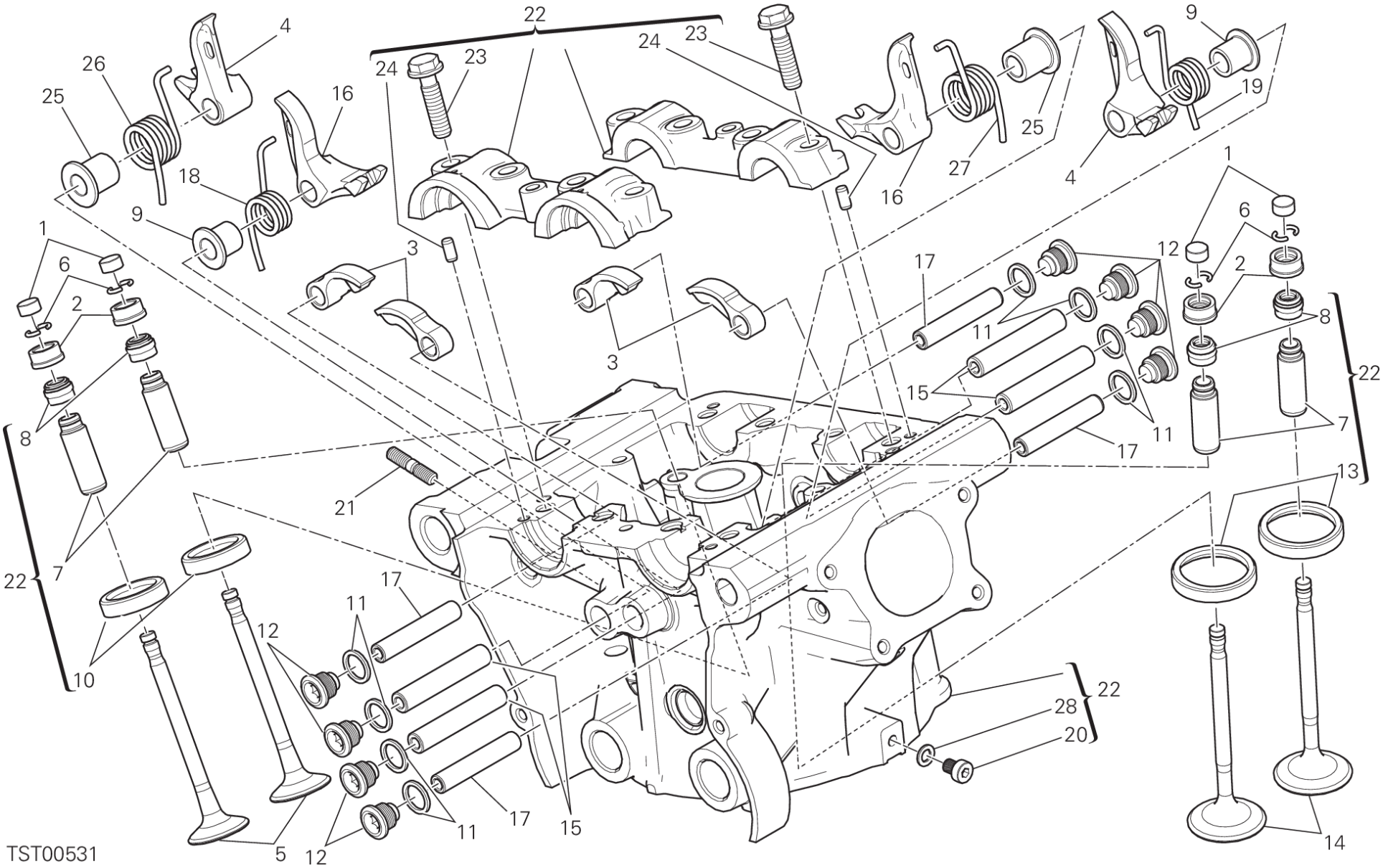
22
4
26
25
16
24
23
24
23
9
19
25
27
16
4
18
9
1
6
2
3
3
17
12
11
15
11
17
1
6
2
8
22
7
13
8
7
22
21
10
17
11
12
22
28
20
17
15
11
12
5
14
TST00531

POS.	CODE	DESCRIPTION	QTY	START DATE	END DATE	VALIDITY	NOTES
14	21010991A	INTAKE VALVE	2	27/06/2013			
15	82112231B	AXLE, ROCKER ARM CLOSING	4	07/12/2012			
16	20910491A	CLOSING ROCKER ARM RIGHT	2	07/12/2012			
17	82112221B	AXLE, ROCKER ARM OPENING	4	07/12/2012			
18	79914861A	VALVE RETURN SPRING RH.	1	07/12/2012			
19	79914851A	VALVE RETURN SPRING LH.	1	07/12/2012			
20	77350618B	SCREW TCEIR M6X8	1	03/04/2012			
21	76610841A	STUD BOLT	3	13/12/2012			
22	30123721AC	COMPLETE VERTICAL HEAD	1	27/06/2013			
23	77914211A	SCREW TEF M8X32	8	03/04/2012			
24	86050061A	PIN M5X10	4	03/04/2012			
25	71312921B	SPACER	2	07/12/2012			
26	79915181B	LEFT VALVE RETURN SPRING	1	07/12/2012			
27	79915191B	RIGHT VALVE RETURN SPRING	1	07/12/2012			
28	85250231A	GASKET	1	03/04/2012			

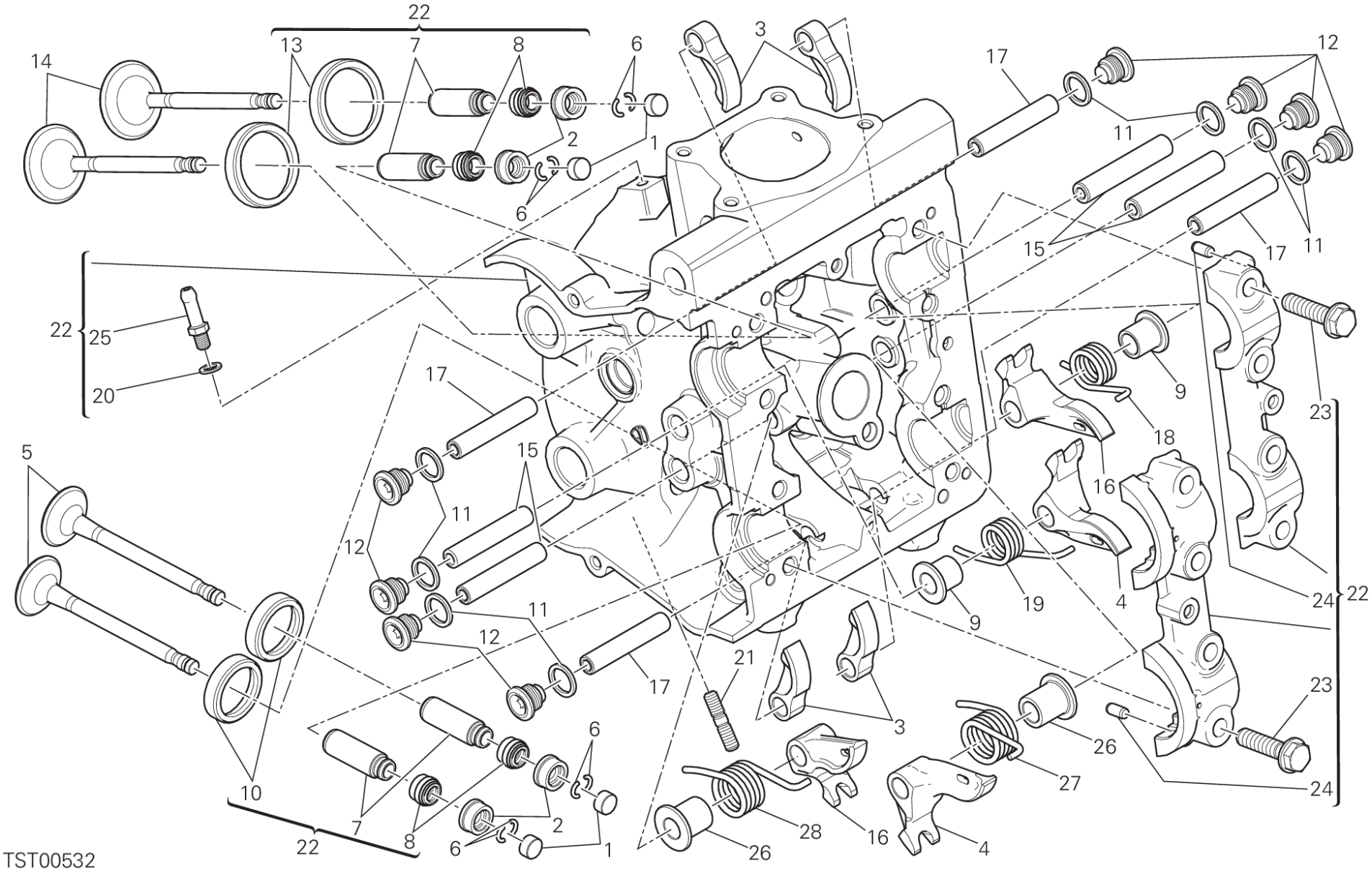
22
13
7
8
6
14
3
17
12
11
2
1
6
15
17
11
22
25
20
17
9
23
18
5
15
16
11
12
19
4
24
22
11
9
12
21
17
3
23
6
26
10
27
24
7
2
28
16
4
8
6
1
26
22
TST00532

POS.	CODE	DESCRIPTION	QTY	START DATE	END DATE	VALIDITY	NOTES
1	84010012A	ADJUSTER, OPENING ROCKER ARM 2.00 MM	4	20/06/2012			
	84010022A	ADJUSTER, OPENING ROCKER ARM 2.05 MM	4	20/06/2012			
	84010032A	ADJUSTER, OPENING ROCKER ARM 2.10 MM	4	20/06/2012			
	84010042A	ADJUSTER, OPENING ROCKER ARM 2.15 MM	4	20/06/2012			
	84010052A	ADJUSTER, OPENING ROCKER ARM 2.20 MM	4	20/06/2012			
	84010062A	ADJUSTER, OPENING ROCKER ARM 2.25 MM	4	20/06/2012			
	84010072A	ADJUSTER, OPENING ROCKER ARM 2.30 MM	4	20/06/2012			
	84010082A	ADJUSTER, OPENING ROCKER ARM 2.35 MM	4	20/06/2012			
	84010092A	ADJUSTER, OPENING ROCKER ARM 2.40 MM	4	20/06/2012			
	84010102A	ADJUSTER, OPENING ROCKER ARM 2.45 MM	4	20/06/2012			
	84010112A	ADJUSTER, OPENING ROCKER ARM 2.50 MM	4	20/06/2012			
	84010122A	ADJUSTER, OPENING ROCKER ARM 2.55 MM	4	20/06/2012			
	84010132A	ADJUSTER, OPENING ROCKER ARM 2.60 MM	4	20/06/2012			
	84010142A	ADJUSTER, OPENING ROCKER ARM 2.65 MM	4	20/06/2012			
	84010152A	ADJUSTER, OPENING ROCKER ARM 2.70 MM	4	20/06/2012			
	84010162A	ADJUSTER, OPENING ROCKER ARM 2.75 MM	4	20/06/2012			
	84010172A	ADJUSTER, OPENING ROCKER ARM 2.80 MM	4	20/06/2012			
	84010182A	ADJUSTER, OPENING ROCKER ARM 2.85 MM	4	20/06/2012			
	84010192A	ADJUSTER, OPENING ROCKER ARM 2.90 MM	4	20/06/2012			
	84010202A	ADJUSTER, OPENING ROCKER ARM 2.95 MM	4	20/06/2012			
	84010212A	ADJUSTER, OPENING ROCKER ARM 3.00 MM	4	20/06/2012			
	84010222A	ADJUSTER, OPENING ROCKER ARM 3.05 MM	4	20/06/2012			
	84010232A	ADJUSTER, OPENING ROCKER ARM 3.10 MM	4	20/06/2012			
	84010242A	ADJUSTER, OPENING ROCKER ARM 3.15 MM	4	20/06/2012			
	84010252A	ADJUSTER, OPENING ROCKER ARM 3.20 MM	4	20/06/2012			
	84010262A	ADJUSTER, OPENING ROCKER ARM 3.25 MM	4	20/06/2012			
	84010272A	ADJUSTER, OPENING ROCKER ARM 3.30 MM	4	20/06/2012			
	84010282A	ADJUSTER, OPENING ROCKER ARM 3.35 MM	4	20/06/2012			
	84010292A	ADJUSTER, OPENING ROCKER ARM 3.40 MM	4	20/06/2012			
	84010302A	ADJUSTER, OPENING ROCKER ARM 3.45 MM	4	20/06/2012			
	84010312A	ADJUSTER, OPENING ROCKER ARM 1.80 MM	4	20/06/2012			
	84010322A	ADJUSTER, OPENING ROCKER ARM 1.85 MM	4	20/06/2012			
	84010332A	ADJUSTER, OPENING ROCKER ARM 1.90 MM	4	20/06/2012			
	84010342A	ADJUSTER, OPENING ROCKER ARM 1.95 MM	4	20/06/2012			
	84010722A	ADJUSTER, OPENING ROCKER ARM 3.60 MM	4	20/06/2012			

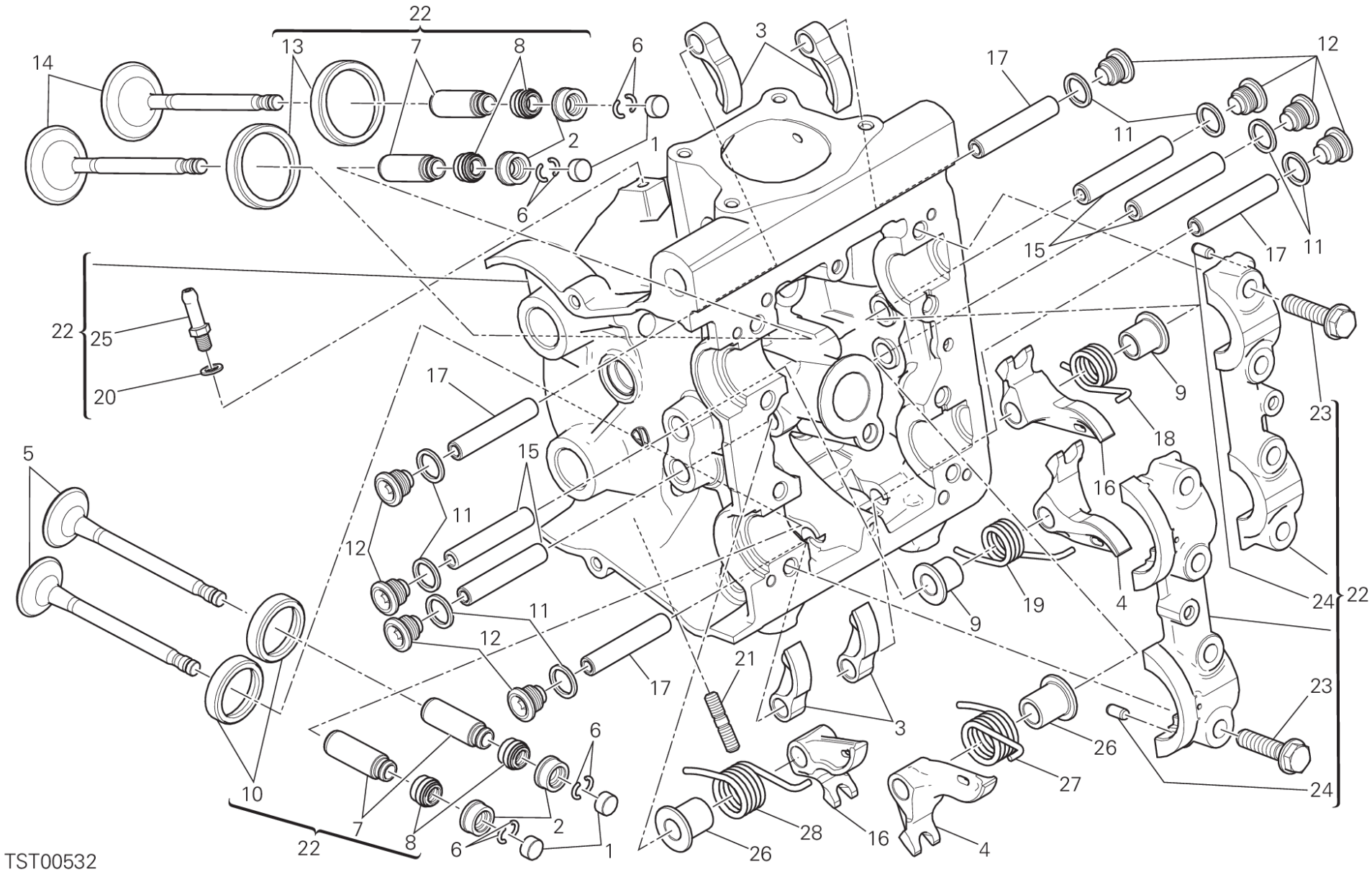
22
13
7
8
6
3
14
17
12
11
2
1
6
15
17
11
22
25
20
17
9
23
18
5
15
16
11
12
19
4
24
22
11
9
12
21
17
3
23
6
26
10
27
24
7
2
28
16
4
22
8
6
1
26
TST00532

POS.	CODE	DESCRIPTION	QTY	START DATE	END DATE	VALIDITY	NOTES
	84010732A	ADJUSTER, OPENING ROCKER ARM 3.80 MM	4	20/06/2012			
	84011082A	ADJUSTER, OPENING ROCKER ARM 3.50 MM	4	20/06/2012			
	84011092A	ADJUSTER, OPENING ROCKER ARM 3.55 MM	4	20/06/2012			
	84011102A	ADJUSTER, OPENING ROCKER ARM 3.65 MM	4	20/06/2012			
	84011112A	ADJUSTER, OPENING ROCKER ARM 3.70 MM	4	20/06/2012			
	84011122A	ADJUSTER, OPENING ROCKER ARM 3.75 MM	4	20/06/2012			
	84011132A	ADJUSTER, OPENING ROCKER ARM 3.85 MM	4	20/06/2012			
	84011142A	ADJUSTER, OPENING ROCKER ARM 3.9 MM	4	20/06/2012			
2	84010412B	ADJUSTER, CLOSING ROCKER ARM 2.20 MM	4	24/12/2009			
	84010422B	ADJUSTER, CLOSING ROCKER ARM 2.25 MM	4	24/12/2009			
	84010432B	ADJUSTER, CLOSING ROCKER ARM 2.30 MM	4	24/12/2009			
	84010442B	ADJUSTER, CLOSING ROCKER ARM 2.35 MM	4	24/12/2009			
	84010452B	ADJUSTER, CLOSING ROCKER ARM 2.40 MM	4	24/12/2009			
	84010462B	ADJUSTER, CLOSING ROCKER ARM 2.45 MM	4	24/12/2009			
	84010472B	ADJUSTER, CLOSING ROCKER ARM 2.50 MM	4	24/12/2009			
	84010482B	ADJUSTER, CLOSING ROCKER ARM 2.55 MM	4	24/12/2009			
	84010492B	ADJUSTER, CLOSING ROCKER ARM 2.60 MM	4	24/12/2009			
	84010502B	ADJUSTER, CLOSING ROCKER ARM 2.65 MM	4	24/12/2009			
	84010512B	ADJUSTER, CLOSING ROCKER ARM 2.70 MM	4	24/12/2009			
	84010522B	ADJUSTER, CLOSING ROCKER ARM 2.75 MM	4	24/12/2009			
	84010532B	ADJUSTER, CLOSING ROCKER ARM 2.80 MM	4	24/12/2009			
	84010542B	ADJUSTER, CLOSING ROCKER ARM 2.85 MM	4	24/12/2009			
	84010552B	ADJUSTER, CLOSING ROCKER ARM 2.90 MM	4	24/12/2009			
	84010562B	ADJUSTER, CLOSING ROCKER ARM 2.95 MM	4	24/12/2009			
	84010572B	ADJUSTER, CLOSING ROCKER ARM 3.00 MM	4	24/12/2009			
	84010582B	ADJUSTER, CLOSING ROCKER ARM 3.05 MM	4	24/12/2009			
	84010592B	ADJUSTER, CLOSING ROCKER ARM 3.10 MM	4	24/12/2009			
	84010602B	ADJUSTER, CLOSING ROCKER ARM 3.15 MM	4	24/12/2009			
	84010612B	ADJUSTER, CLOSING ROCKER ARM 3.20 MM	4	24/12/2009			
	84010622B	ADJUSTER, CLOSING ROCKER ARM 3.25 MM	4	24/12/2009			
	84010632B	ADJUSTER, CLOSING ROCKER ARM 3.30 MM	4	24/12/2009			
	84010642B	ADJUSTER, CLOSING ROCKER ARM 3.35 MM	4	24/12/2009			
	84010652B	ADJUSTER, CLOSING ROCKER ARM 3.40 MM	4	24/12/2009			
	84010662B	ADJUSTER, CLOSING ROCKER ARM 3.45 MM	4	24/12/2009			
	84010672B	ADJUSTER, CLOSING ROCKER ARM 3.50 MM	4	24/12/2009			

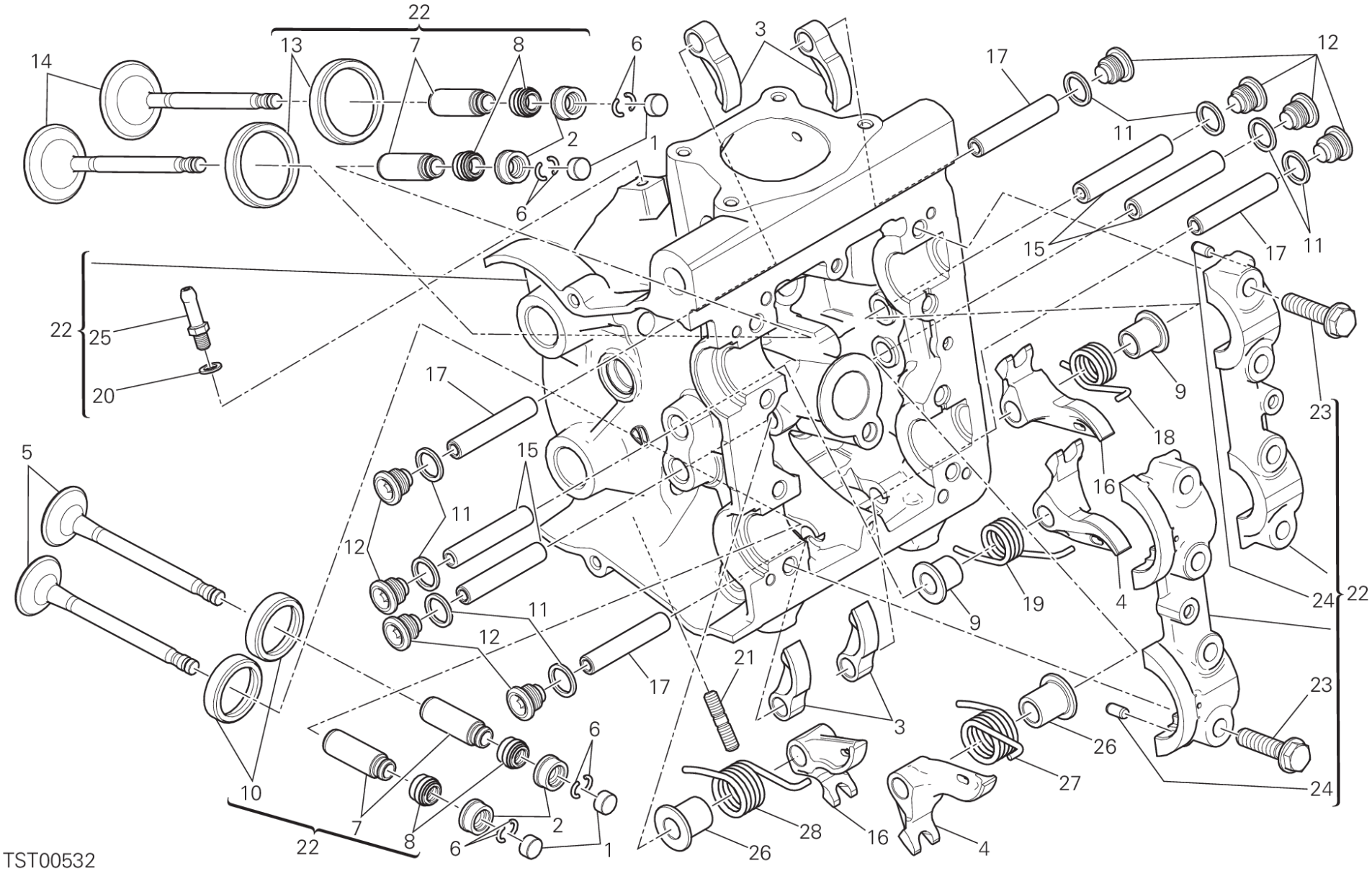
22
13
7
8
6
3
14
17
12
11
2
1
6
15
17
11
22
25
20
17
9
23
18
5
15
16
11
12
19
4
24
22
11
9
12
21
17
3
23
6
26
10
27
24
7
2
28
16
4
22
8
6
1
26
TST00532

POS.	CODE	DESCRIPTION	QTY	START DATE	END DATE	VALIDITY	NOTES
	84010682B	ADJUSTER, CLOSING ROCKER ARM 3.55 MM	4	24/12/2009			
	84010692B	ADJUSTER, CLOSING ROCKER ARM 3.60 MM	4	24/12/2009			
	84010702B	ADJUSTER, CLOSING ROCKER ARM 3.65 MM	4	24/12/2009			
	84010712B	ADJUSTER, CLOSING ROCKER ARM 3.70 MM	4	24/12/2009			
	84010722B	ADJUSTER, CLOSING ROCKER ARM 3.75 MM	4	24/12/2009			
	84010732B	ADJUSTER, CLOSING ROCKER ARM 3.80 MM	4	24/12/2009			
	84010742B	ADJUSTER, CLOSING ROCKER ARM 3.85 MM	4	24/12/2009			
	84010752B	ADJUSTER, CLOSING ROCKER ARM 3.90 MM	4	24/12/2009			
	84010762B	ADJUSTER, CLOSING ROCKER ARM 3.95 MM	4	24/12/2009			
	84010772B	ADJUSTER, CLOSING ROCKER ARM 4.00 MM	4	24/12/2009			
	84010782B	ADJUSTER, CLOSING ROCKER ARM 4.05 MM	4	24/12/2009			
	84010792B	ADJUSTER, CLOSING ROCKER ARM 4.10 MM	4	24/12/2009			
	84010802B	ADJUSTER, CLOSING ROCKER ARM 4.15 MM	4	24/12/2009			
	84010812B	ADJUSTER, CLOSING ROCKER ARM 4.20 MM	4	24/12/2009			
	84010822B	ADJUSTER, CLOSING ROCKER ARM 4.25 MM	4	24/12/2009			
	84010832B	ADJUSTER, CLOSING ROCKER ARM 4.30 MM	4	24/12/2009			
	84010842B	ADJUSTER, CLOSING ROCKER ARM 4.35 MM	4	24/12/2009			
	84010852B	ADJUSTER, CLOSING ROCKER ARM 4.40 MM	4	24/12/2009			
	84010862B	ADJUSTER, CLOSING ROCKER ARM 4.45 MM	4	24/12/2009			
	84010872B	ADJUSTER, CLOSING ROCKER ARM 4.50 MM	4	24/12/2009			
3	20810321A	OPEN. ROCKER ARM	4	07/12/2012			
4	20910501A	CLOSING ROCKER ARM LEFT	2	07/12/2012			
5	21110991A	EXHAUST VALVE	2	27/06/2013			
6	66910011E	C RING	8	07/12/2012			
7	30310631BB	GUIDE, VALVE OVERSIZED 0.03 MM	4	25/03/2013			
	30310631BC	GUIDE, VALVE OVERSIZED 0.06 MM	4	25/03/2013			
	30310631BD	GUIDE, VALVE OVERSIZED 0.09 MM	4	25/03/2013			
8	76410871A	SEAL VALVE STEM	4	03/04/2012			
9	71312921A	SPACER	2	07/12/2012			
10	30411011AB	SEAT, EXHAUST VALVE +0.03 MM	2	17/07/2013			
	30411011AC	SEAT, EXHAUST VALVE +0.06 MM	2	17/07/2013			
11	85250261B	GASKET, ALUMINIUM 12X16X1.5	8	07/12/2012			
12	78010511E	PLUG	8	07/12/2012			
13	30411001AB	SEAT, INLET VALVE +0.03 MM	2	17/07/2013			
	30411001AC	SEAT, INLET VALVE +0.06 MM	2	17/07/2013			

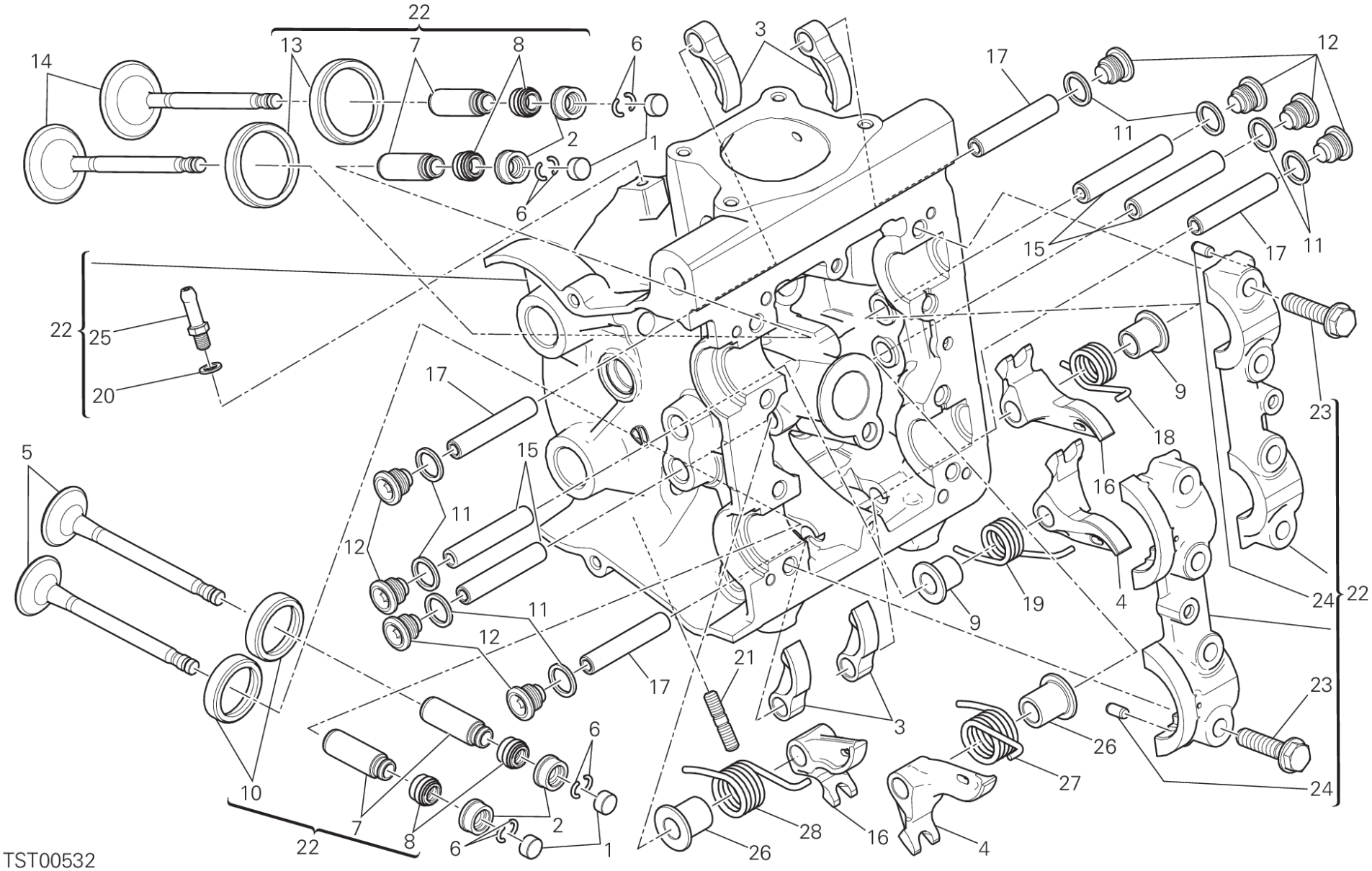
22
13
7
8
6
3
14
17
12
11
2
1
6
15
17
11
22
25
20
17
9
23
18
5
15
16
11
12
19
4
24
22
11
9
12
21
17
3
23
6
26
10
27
24
7
2
28
16
4
22
8
6
1
26
TST00532

POS.	CODE	DESCRIPTION	QTY	START DATE	END DATE	VALIDITY	NOTES
14	21010991A	INTAKE VALVE	2	27/06/2013			
15	82112231B	AXLE, ROCKER ARM CLOSING	4	07/12/2012			
16	20910491A	CLOSING ROCKER ARM RIGHT	2	07/12/2012			
17	82112221B	AXLE, ROCKER ARM OPENING	4	07/12/2012			
18	79914861A	VALVE RETURN SPRING RH.	1	07/12/2012			
19	79914851A	VALVE RETURN SPRING LH.	1	07/12/2012			
20	85250231A	GASKET	1	03/04/2012			
21	76610841A	STUD BOLT	3	13/12/2012			
22	30123711AC	COMPLETE HORIZONTAL HEAD	1	27/06/2013			
23	77914211A	SCREW TEF M8X32	8	03/04/2012			
24	86050061A	PIN M5X10	4	03/04/2012			
25	81411881A	NIPPLE, HOSE	1	03/04/2012			
26	71312921B	SPACER	2	07/12/2012			
27	79915181B	LEFT VALVE RETURN SPRING	1	07/12/2012			
28	79915191B	RIGHT VALVE RETURN SPRING	1	07/12/2012			

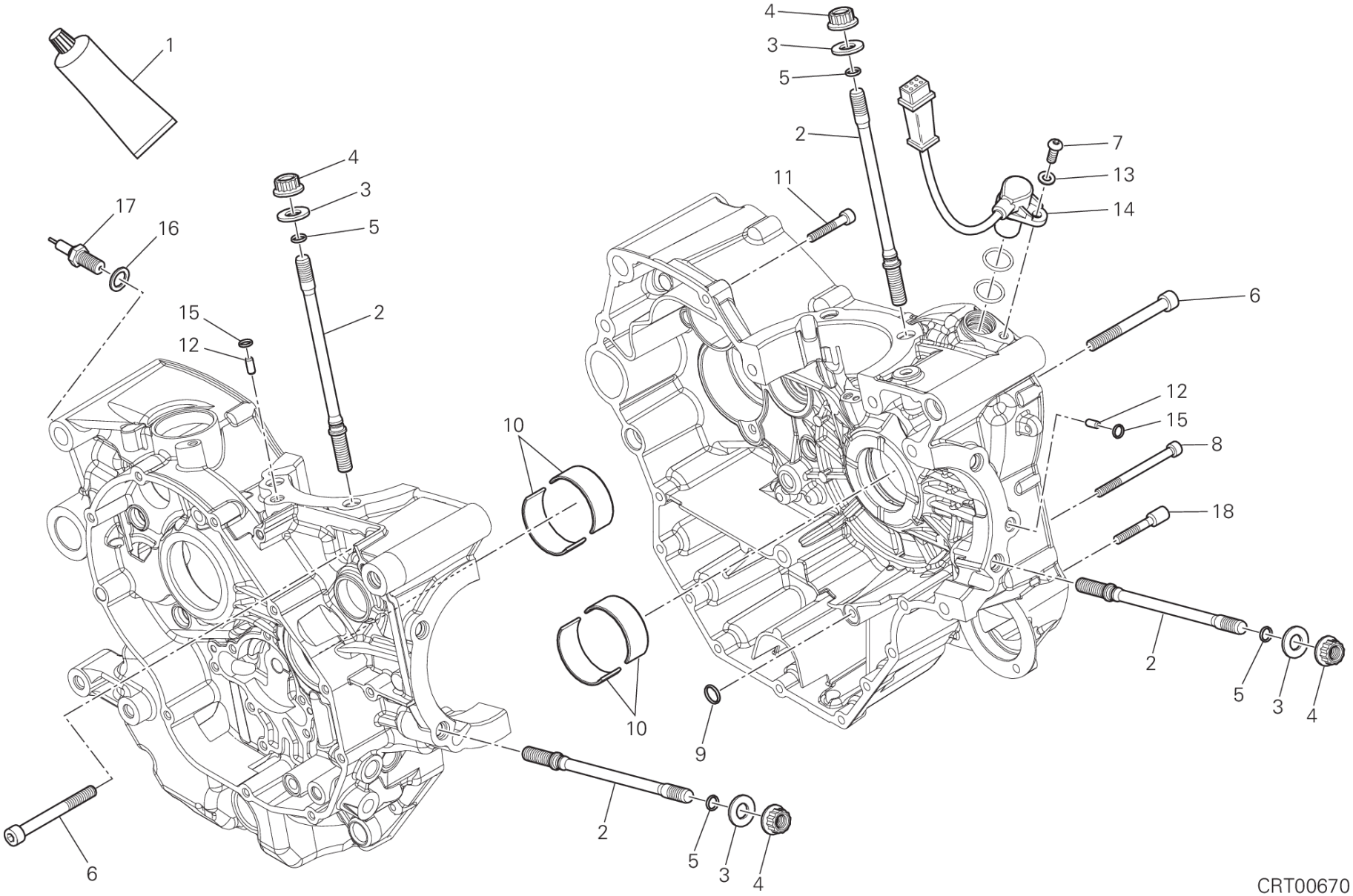
1
4
3
5
2
7
13
14
11
6
12
15
8
18
17
16
10
9
CRT00670

POS.	CODE	DESCRIPTION	QTY	START DATE	END DATE	VALIDITY	NOTES
1	942470014	LIQUID GASKET	1	16/04/2013			
2	76610553B	STUD BOLT FASTENING HEAD CYLINDER	8	16/04/2013			
3	85610642A	WASHER, SPECIAL 10.5X21X2	8	16/04/2013			
4	74810501A	NUT M10X1.5	8	16/04/2013			
5	88641181A	O-RING	8	16/04/2013			
6	77151363B	SCREW TCEI M8X75 UNI 5931	7	16/04/2013			
7	77550211B	SCREW TBEI M6X16 ISO7380 10.9	1	23/09/2011			
8	77150808B	SCREW TCEI M6X75	2	16/04/2013			
9	88641321A	O-RING 11.11X1.78	1	16/04/2013			
10	11210791AA	HALF-BEARING RED	4	05/07/2013			
	11210791AB	HALF-BEARING BLUE	4	05/07/2013			
	11210791AC	HALF-BEARING YELLOW	4	05/07/2013			
	11210791AD	HALF-BEARING BLACK	4	05/07/2013			
	11210791AE	HALF-BEARING GREEN	4	05/07/2013			
11	77150723B	SCREW TCEI M6X35 UNI 5931	5	16/04/2013			
12	86010051B	DOWEL	2	16/04/2013			
13	85310031A	SPRING WASHER 6 MM	1	16/04/2013			
14	55241321B	SENSOR, TIMING & RPM	1	16/04/2013			
15	88610241A	O-RING 5.23X2.62	2	16/04/2013			
16	85250241A	WASHER 10X14X1	1	29/01/2014			
17	53910211B	NEUTRAL SWITCH ASSY	1	29/01/2014			
18	77916041C	SCREW, SPECIAL	3	28/04/2014			

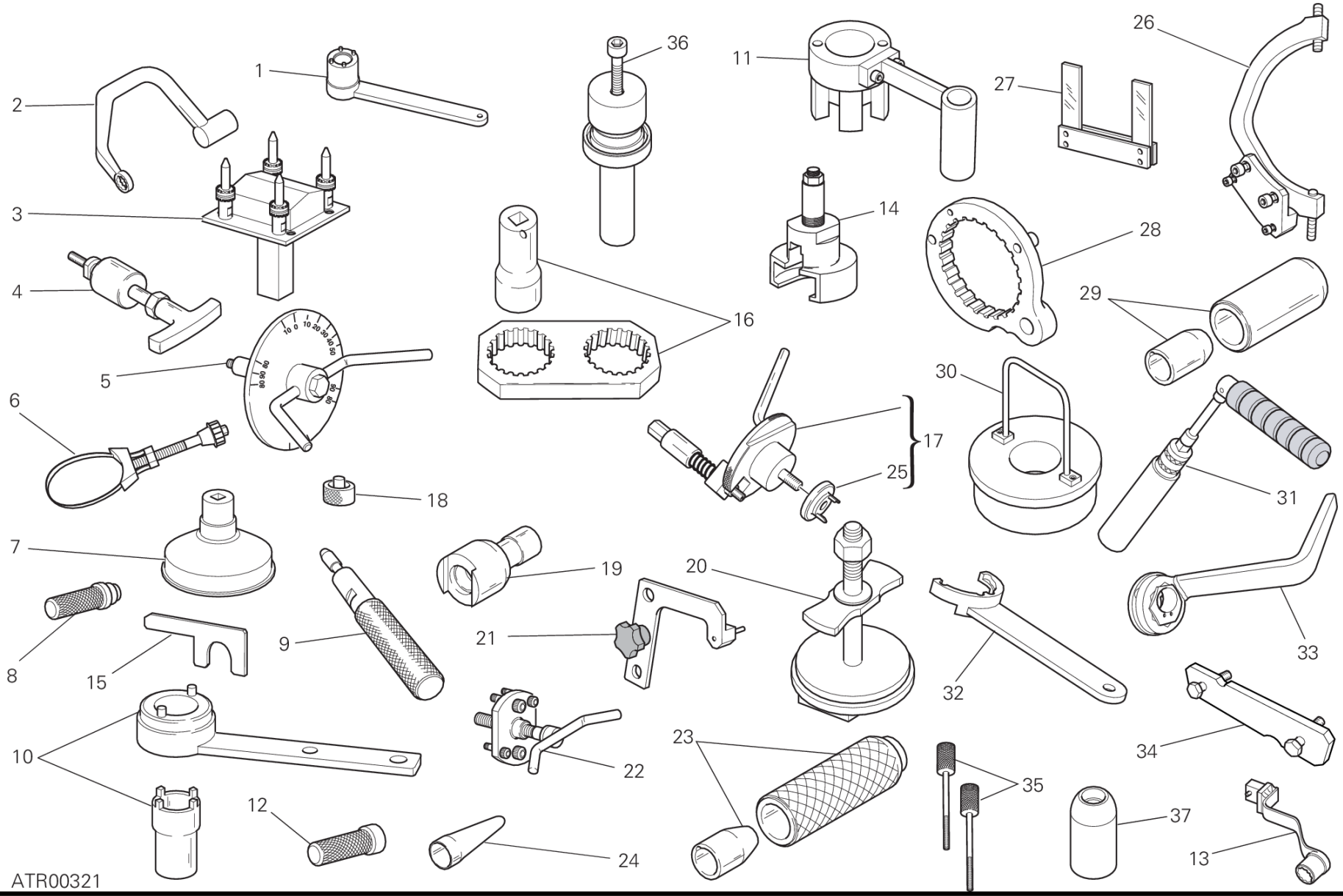
1
2
3
4
5
6
7
8
9
10
11
12
13
14
15
16
17
18
19
20
21
22
23
24
25
26
27
28
29
30
31
32
33
34
35
36
37
ATR00321

POS.	CODE	DESCRIPTION	QTY	START DATE	END DATE	VALIDITY	NOTES
1	887130137	CRANKSHAFT GEAR RETAINING WRENCH	1				
2	887132676	HEAD NUTS HOLDER WRENCH (M10)	1				
3	887132863	HEAD MOUNTING BASE	1				
4	887131994	ROCKER PIN EXTRACTOR	1				
5	887651523	DEGREE WHEEL HOLDER TOOL FOR IGNITION ADVANCE CHECK	1				
6	887132906	WRENCH, OIL FILTER CARTRIDGE	1				
7	887130944	WRENCH TO TIGHTEN OIL FILTER CARTRIDGE	1				
8	887130869	TOOL, WATER PUMP FRONT SEAL ASSEMBLING	1				
9	887132442	TOOL, OIL SEAL MOUNTING (Ø7)	1				
10	887131805	DRIVING ROLLER TIGHTENING TOOL	1				
11	887134284	REACTION TOOL FOR WET CLUTCH	1				
12	887130870	TOOL ASSEMBLING WATER PUMP FRONT SEAL	1				
13	887134198	EXHAUST NUTS HOLDER WRENCH	1				
14	887132092	EXTRACTOR FOR PRIMARY DRIVE GEAR	1				
15	887132878	SPACER AND FORK FEELER GAUGE 0.2/0.3 MM	1				
16	887131806	REACTION TOOL BELT ROLLER TIGHTENING	1				
17	887132011	CRANKSHAFT RESET TOOL	1				
18	887651298	SPACER FOR CHECKING LOWER VALVE SHIM	1				
19	887131821	WRENCH TO TIGHTEN TENSIONING BOLTS	1				
20	887134286	CLUTCH PLATES SET HOLDER	1				
21	887133334	PLATE POSITIONING GEAR ENGAGEMENT FORK	1				
22	887131749	DRIVE ROLLER PULLER	1				
23	887132834	TOOL SNAP RING INSTALLATION	1				
24	887131920	TOOL TO FIT O-RINGS ONTO STUD BOLTS	1				
25	887134411	INSERT	1				
26	887133367	FLYWHEEL WRENCH	1				
27	887651000	FORK FEELER GAUGE 0.1 MM	1				
	887651005	FORK FEELER GAUGE 0.2 MM	1				
	887651006	FORK FEELER GAUGE 0.3 MM	1				
28	887132556	WRENCH HOLD CLUCH HOUSING DRUM STEADY	1				
29	887132861	TOOL TO FIT SEALS ON CAMSHAFTS	1				
30	887132870	TOOL, CON-ROD GUIDING	1				
31	887132877	SPARK PLUG WRENCH	1				
32	887133219	TIMING BELT ROLLER REACTION TOOL	1				
33	887133497	WRENCH FOR TENSIONING MOBILE BELT TENSIO	1				

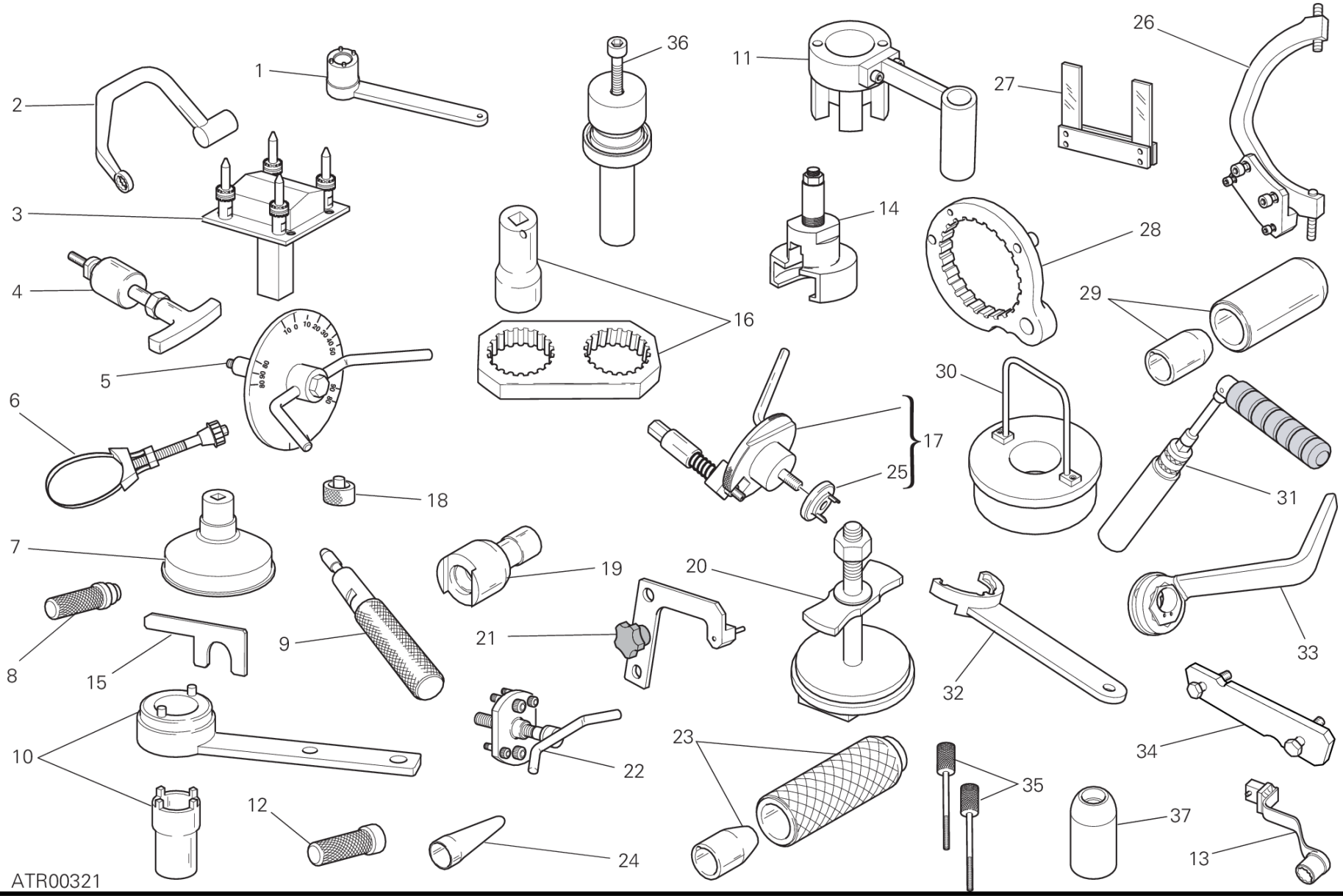
1
2
3
4
5
6
7
8
9
10
11
12
13
14
15
16
17
18
19
20
21
22
23
24
25
26
27
28
29
30
31
32
33
34
35
36
37
ATR00321

POS.	CODE	DESCRIPTION	QTY	START DATE	END DATE	VALIDITY	NOTES
34	887651623	BELT ROLLER TIMING TOOL	1				
35	887134285	CLUTCH SCREW	1				
36	887134145	HALF-BEARINGS FITTING TOOL	1				
37	887134189	PAD	1				

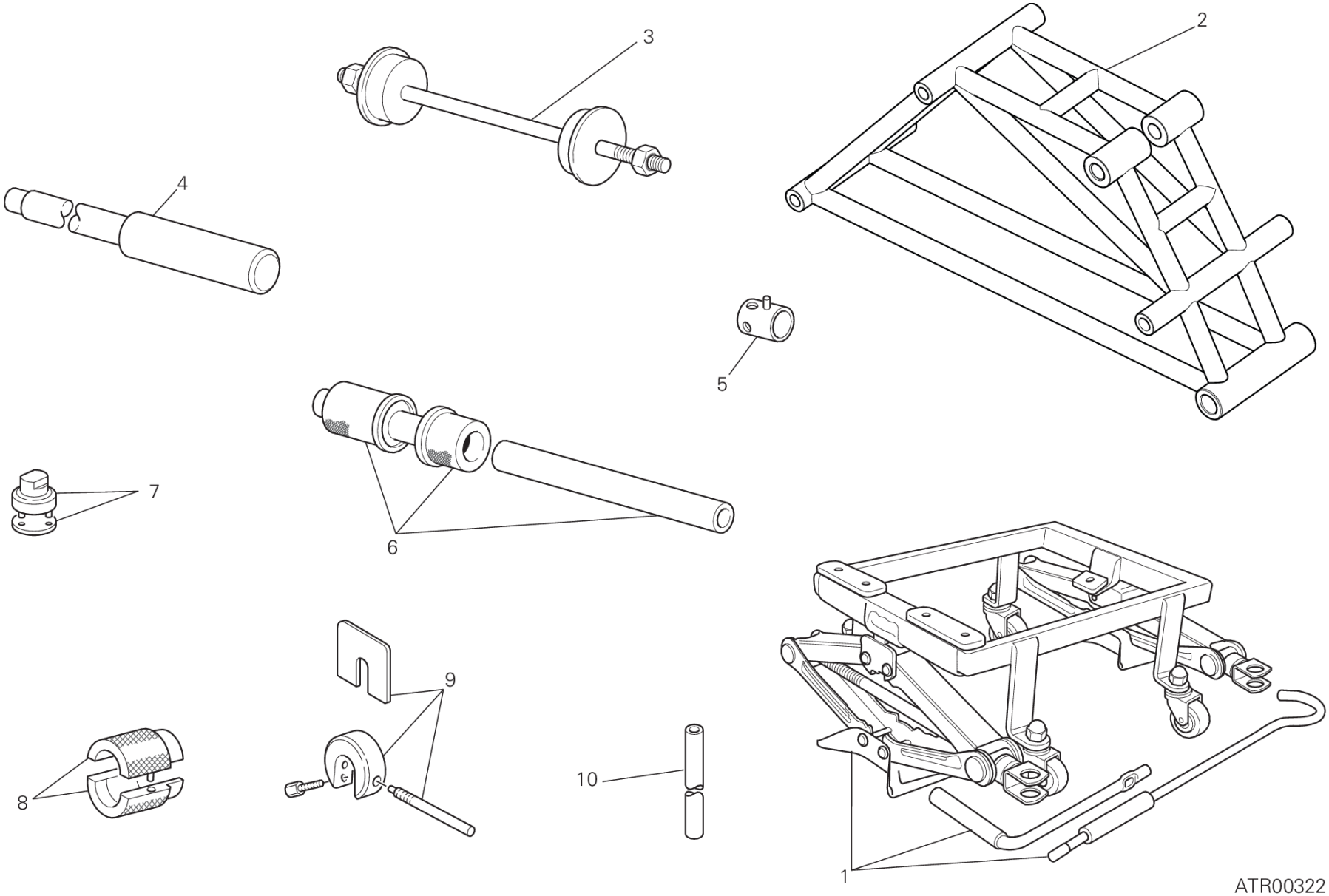
3
2
4
5
7
6
9
8
10
1
ATR00322

POS.	CODE	DESCRIPTION	QTY	START DATE	END DATE	VALIDITY	NOTES
1	887133220	BENCH FOR ENGINE REPAIR	1				
2	887134513	FRAME/MOTOR SUPPORT	1				
3	887131062	TOOL ASSEMBLING STEERING TUBE BEARING	1				
4	887131074	TOOL DISASSEMBLING SWINGARM PIVOT	1				
5	800070139	WRENCH FOR FRONT WHEEL SPINDLE	1				
6	887132409	TOOL ASSEMBLING SWINGARM BALL BEARING	1				
7	887131058	SPANNER TO ASSEMBLE THE STEERING SLEEVE	1				
8	887131096	TOOL TO OVERHAUL FORKS	1				
9	887130957	TOOL TO KEEP THE SPACER SHOWA FORKS	1				
10	887130958	TRACTION BAR SHOWA FORKS OVERHAULING	1				

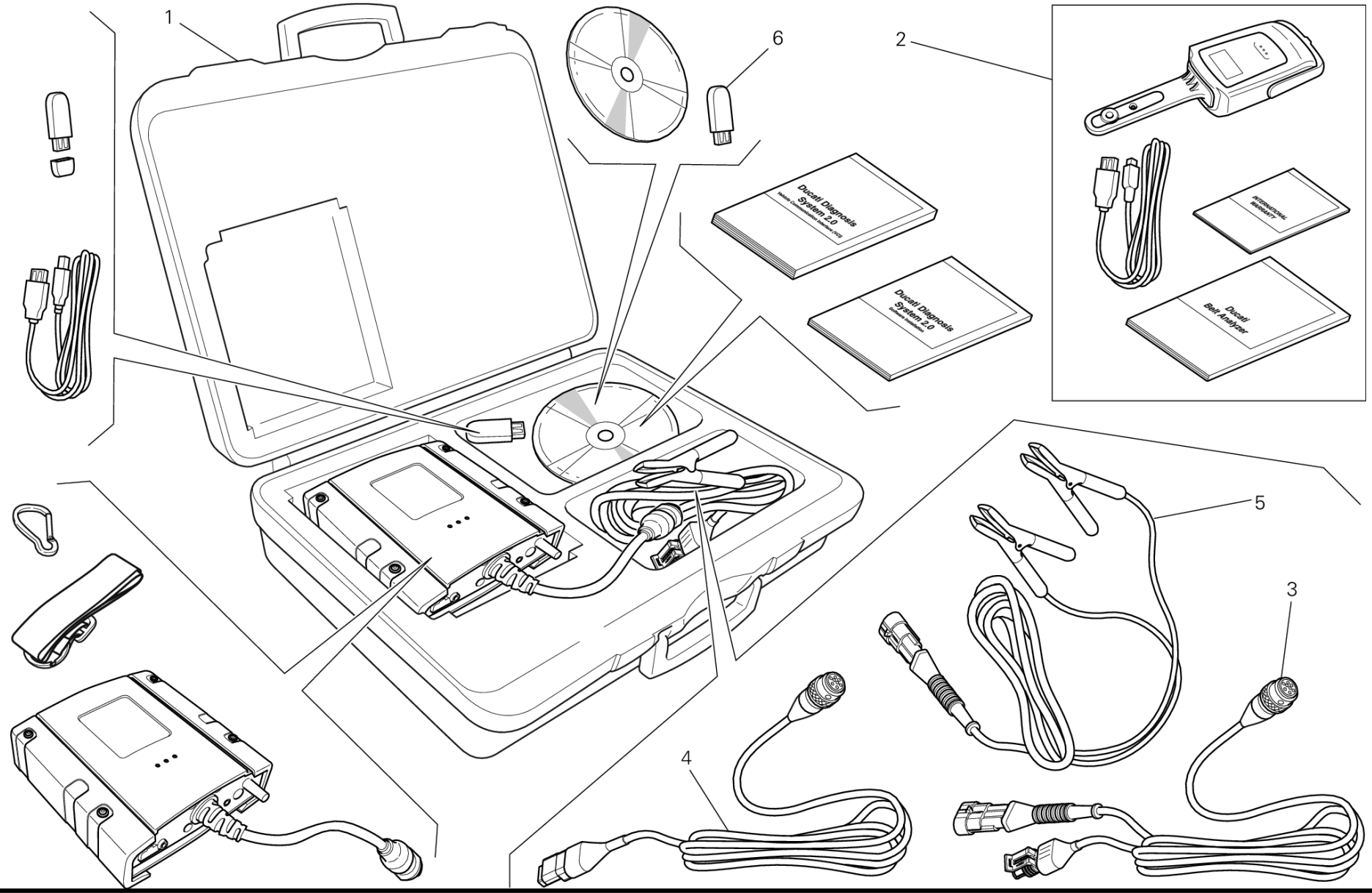
1
2
3
4
5
6
Ducati Diagnosis System 2.0
Ducati Diagnosis System 2.0
INTERNATIONAL WARRANTY
Ducati Belt Analyzer

POS.	CODE	DESCRIPTION	QTY	START DATE	END DATE	VALIDITY	NOTES
1	979000252	DDS 2 (Ducati Diagnosis System 2.0)	1				
2	979000253	BELT TENSIONING KIT	1				
3	979000254	MAIN CABLE	1				
4	979000255	MAIN CABLE (CAN)	1				
5	979000256	MAIN CABLE DDS	1				
6	28620441A	CHIAVE "PC HASP DDS2.0"	1				

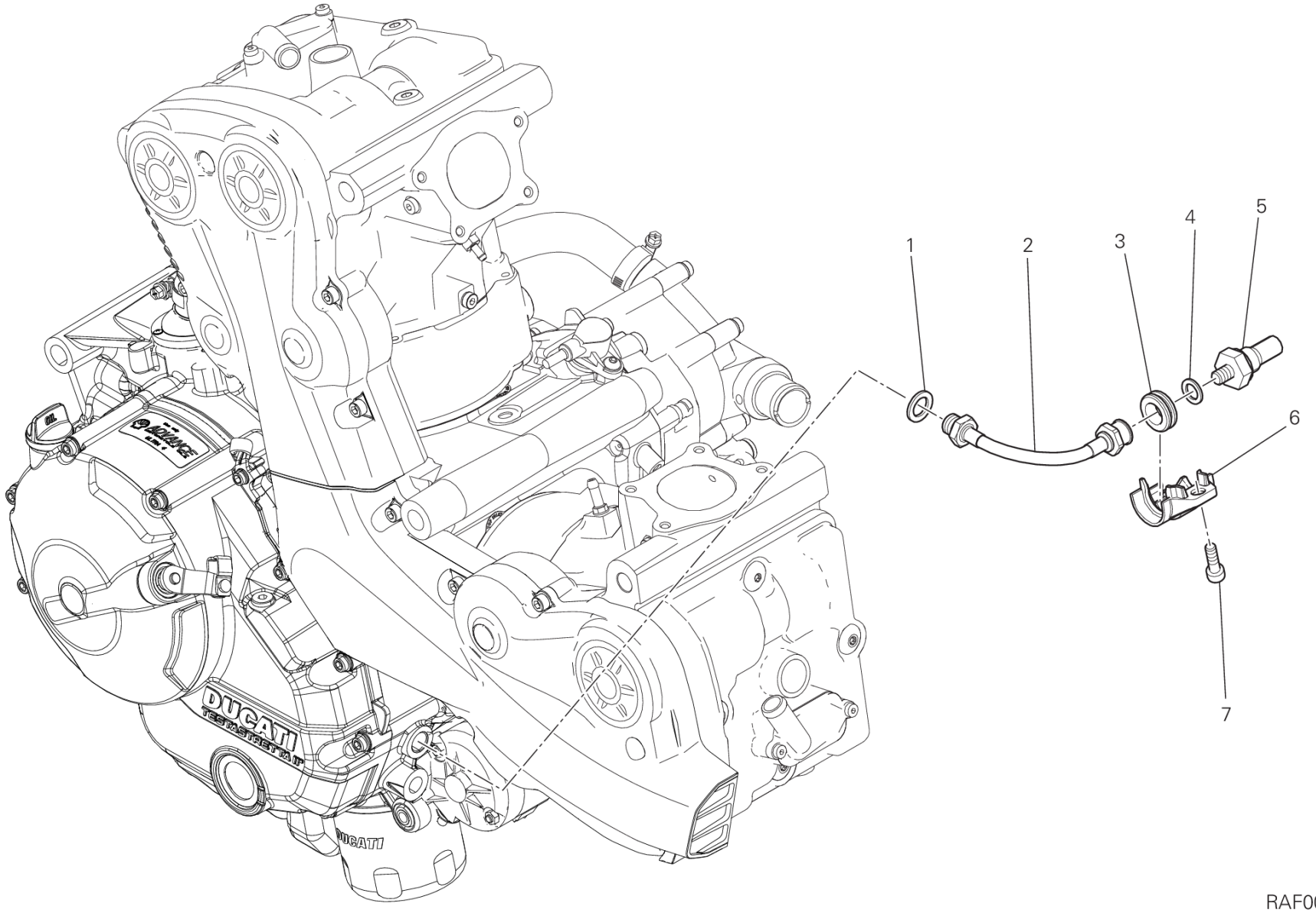
1
2
3
4
5
6
7
RAF00516

DRAWING 016 - SWITCH ASSY, OIL PRESSURE [MOD:M 821]

GROUP FRAME

POS.	CODE	DESCRIPTION	QTY	START DATE	END DATE	VALIDITY	NOTES
1	78710111A	GASKET, ALUMINIUM 14X22X2	1	15/11/2012			
2	87711571A	HOSE, OIL	1	15/11/2012			
3	76440581A	RUBBER PAD	1	15/11/2012			
4	85211951A	GASKET 10.5X17X2	1	15/11/2012			
5	53940302A	SWITCH ASSY, OIL PRESSURE	1	15/11/2012			
6	82916531A	HOLDER SENSOR	1	15/11/2012			
7	77140653CC	SCREW	1	15/11/2012			

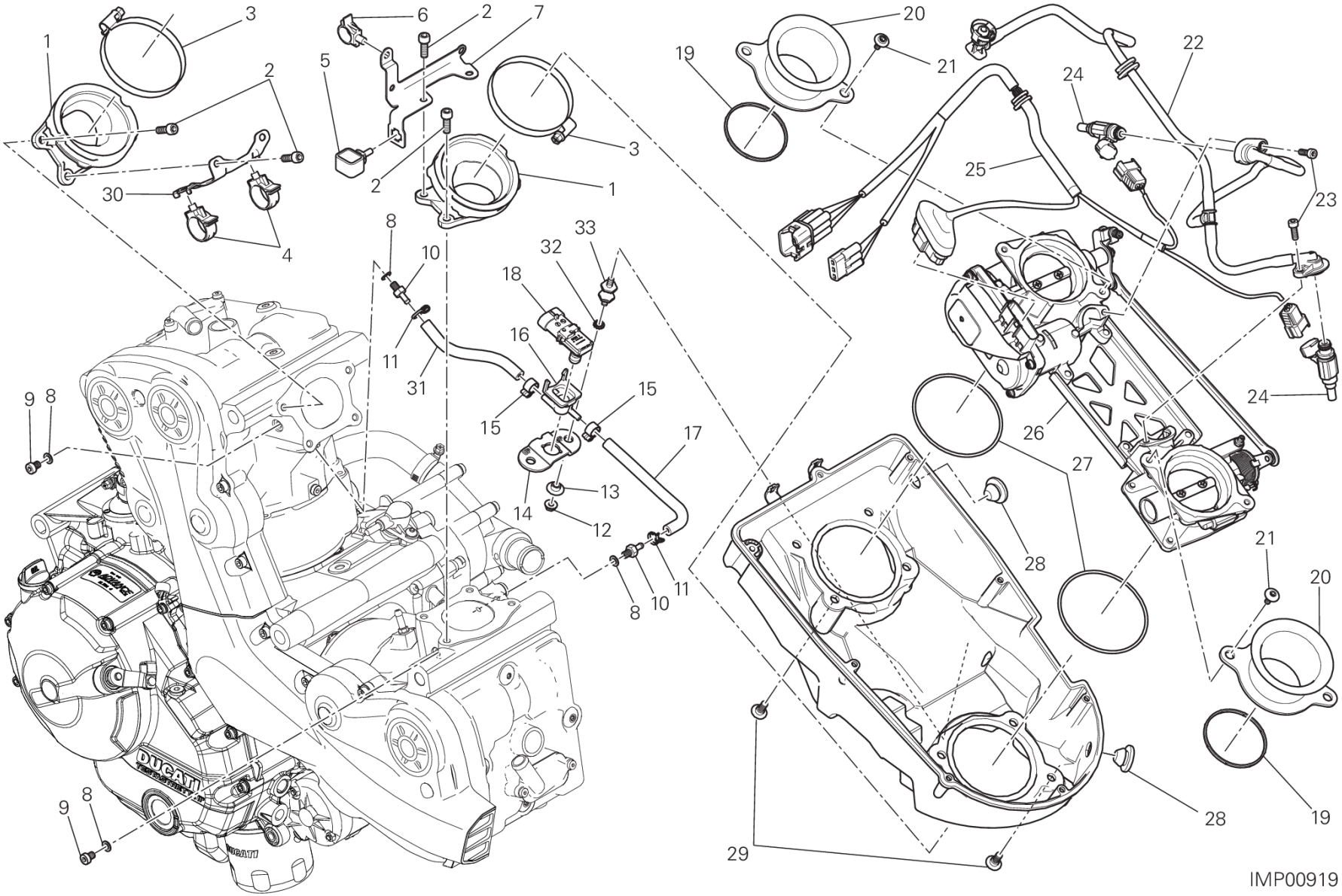
1
3
2
30
4
6
2
7
5
2
3
1
8
10
11
31
33
32
18
16
15
15
17
13
14
12
8
10
11
9
8
9
8
20
21
19
22
24
25
23
24
26
27
28
21
20
28
19
29
IMP00919

DRAWING 017 - THROTTLE BODY [MOD:M 821;XST:AUS,EUR,FRA,JAP]

GROUP FRAME

POS.	CODE	DESCRIPTION	QTY	START DATE	END DATE	VALIDITY	NOTES
1	14010762B	INTAKE MANIFOLD	2	05/09/2013			
2	77110391B	SCREW	8	31/05/2013			
3	74141871A	CLAMP 60-80 MM	2	22/10/2013			
4	75840641A	HOSE GUIDE	2	22/10/2013			
5	82911901A	MOUNT RUBBER	1	01/08/2013			
6	75840721A	HOSE GUIDE	1	01/08/2013			
7	83018421BA	BRACKET, WATER TANK	1	01/08/2013			
8	85250231A	GASKET	4	22/02/2013			
9	77350618B	SCREW TCEIR M6X8	2	18/02/2013			
10	81413341A	UNION	2	31/05/2013			
11	74140431A	CLAMP	2	12/03/2013			
12	74840261C	NUT	2	08/09/2014			
13	71611071B	SPACER	2	08/09/2014			
14	86611991A	RUBBER PAD SENSOR, PRESSURE	1	08/09/2014			
15	74141711A	CLAMP 10-7 MM	2	12/03/2013			
16	81415251B	BRACKET SENSOR PRESSURE	1	08/09/2014			
17	59014111A	DEPRESSURE/PRESSURE LINE HORIZONTAL	1	01/11/2013			
18	55241441A	SENSOR, PRESSURE	1	12/03/2013			
19	78811301A	GASKET AIR FUNNEL	2	12/03/2013			
20	13510401A	AIR FUNNEL	2	12/03/2013			
21	77210852C	SCREW	4	12/03/2013			
22	59024001C	COMPLETE PIPE SET	1	01/09/2013			
23	77150408B	SCREW TCEI M5X14	2	12/03/2013			
24	28040411A	INJECTOR	2	09/12/2013			
25	5101A081B	INJECTION WIRING	1	10/06/2014			
26	28240932A	THROTTLE BODY	1	09/01/2014			
27	88642231A	O-RING	2	12/03/2013			
28	76411851A	BYPASS CAP	2	12/03/2013			
29	77912741A	SCREW TBEI M6X14	8	12/03/2013			
30	83018221A	HOLDER WIRING	1	22/10/2013			
31	59014101A	DEPRESSURE/PRESSURE LINE VERTICAL	1	01/11/2013			
32	46240461A	WASHER, SPRING	2	08/09/2014			
33	70010901A	VIBRATION DAMPER	2	08/09/2014			

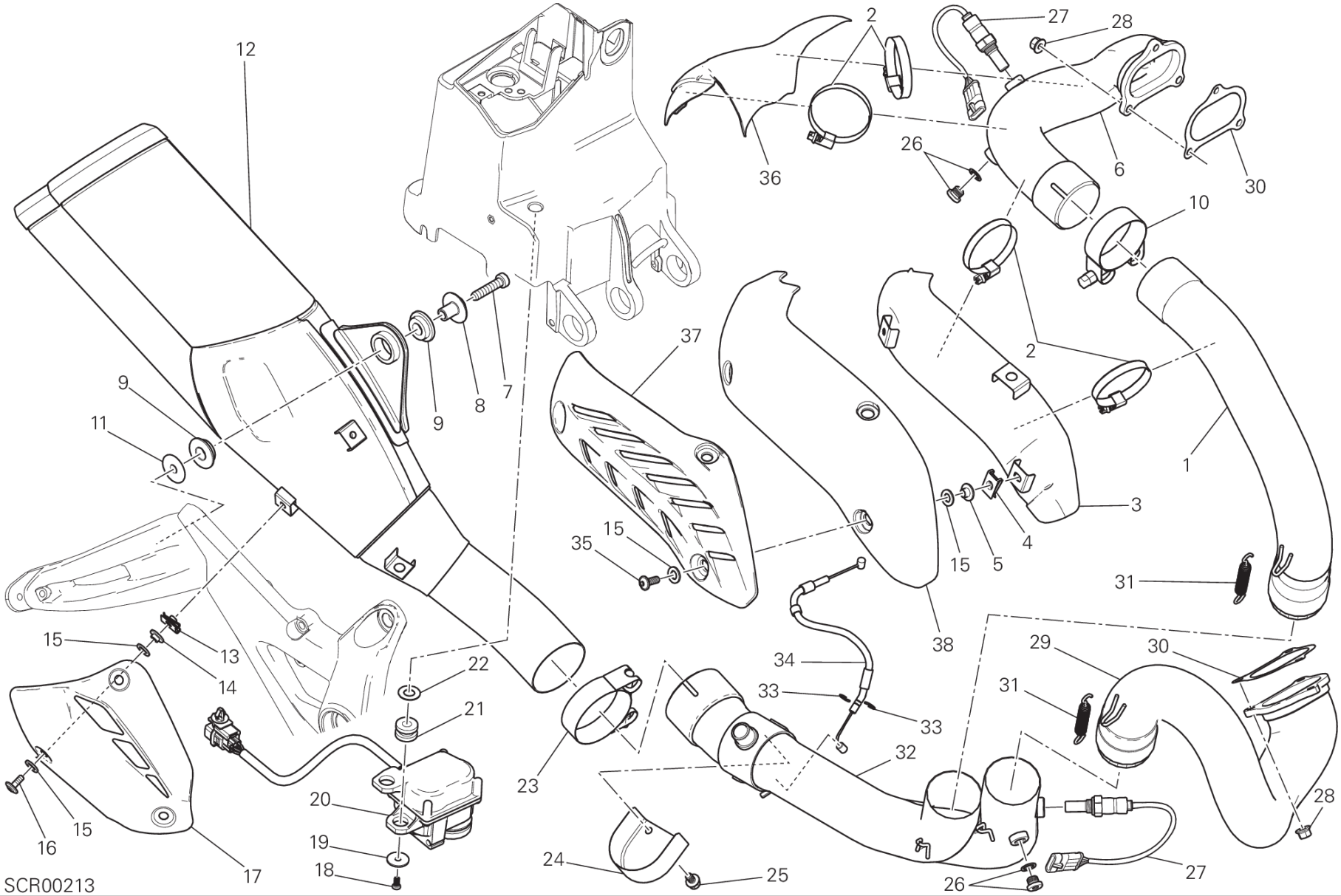
12
2
27
28
36
26
6
30
10
37
9
11
9
8
7
2
1
3
15
35
15
5
4
31
38
15
13
14
22
34
29
30
33
33
31
21
32
23
20
28
16
15
19
24
25
26
27
17
18
SCR00213

POS.	CODE	DESCRIPTION	QTY	START DATE	END DATE	VALIDITY	NOTES
1	57113261A	EXHAUST PIPE VERTICAL	1	22/10/2013			
2	74142381A	CLAMP 40/60 MM	4	22/10/2013			
3	4601B284A	HOLDER HEAT GUARD VERTICAL	1	22/10/2013			
4	85040381A	QUICK FASTENING	3	22/10/2013			
5	71614691AA	SPACER	3	22/10/2013			
6	57113251A	EXHAUST MANIFOLD	1	22/10/2013			
7	77355068B	SCREW TCEIR M8X35	1	22/10/2013			
8	71314361AB	BUSH	1	22/10/2013			
9	76410011A	DAMPER	2	22/10/2013			
10	74141461A	CLAMP 53/20 MM	1	22/10/2013			
11	85213681A	WASHER	1	18/07/2014			
12	57322031AA	SILENZIATORE COMPLETO	1	05/05/2014		XST:JAP	JAP - CHN - THA
	57322212AA	SILENZIATORE COMPLETO	1	05/05/2014		XST:AUS,EUR,FRA	EU - USA
13	85040551A	QUICK FASTENING	3	22/10/2013			
14	71614601AA	SPACER	3	22/10/2013			
15	85210721B	WASHER	12	22/10/2013			
16	77210882B	SCREW TBEI M5X12	3	22/10/2013			
17	4601C251A	HEAT GUARD SILENCER	1	05/05/2014			
18	77440071A	SCREW, TAPPING M4.5X12	2	01/08/2013			
19	85241731A	WASHER 5.5X20X1.5	2	01/08/2013			
20	59340393A	ELECTRIC MOTOR, EXHAUST VALVE	1	01/08/2013			
21	76411301A	RUBBER PAD	2	01/08/2013			
22	85210541B	WASHER 10.2X20X1	2	01/08/2013			
23	74141681A	CLAMP 61-20 MM	1	22/10/2013			
24	4601B921A	GUARD, EXHAUST VALVE	1	22/10/2013			
25	77253268C	SCREW	2	05/05/2014			
26	78020011A	PLUG ASSY	2				
27	55214011A	SENSOR LAMBDA SOND	2	22/10/2013			
28	74810241A	NUT	6	22/10/2013			
29	57013382A	HORIZONTAL HEAD EXHAUST PIPE	1	22/10/2013			
30	79010211A	GASKET, EXHAUST PIPE	2	22/10/2013			
31	79910485A	SPRING EXHAUST , LONG	2	22/10/2013			
32	57211632A	PIPE, EXHAUST CENTER	1	22/10/2013			
33	88450031A	CIRCLIP E-TYPE	2	22/10/2013			
34	73210441F	CABLE, EXHAUST VALVE	1	13/03/2014			

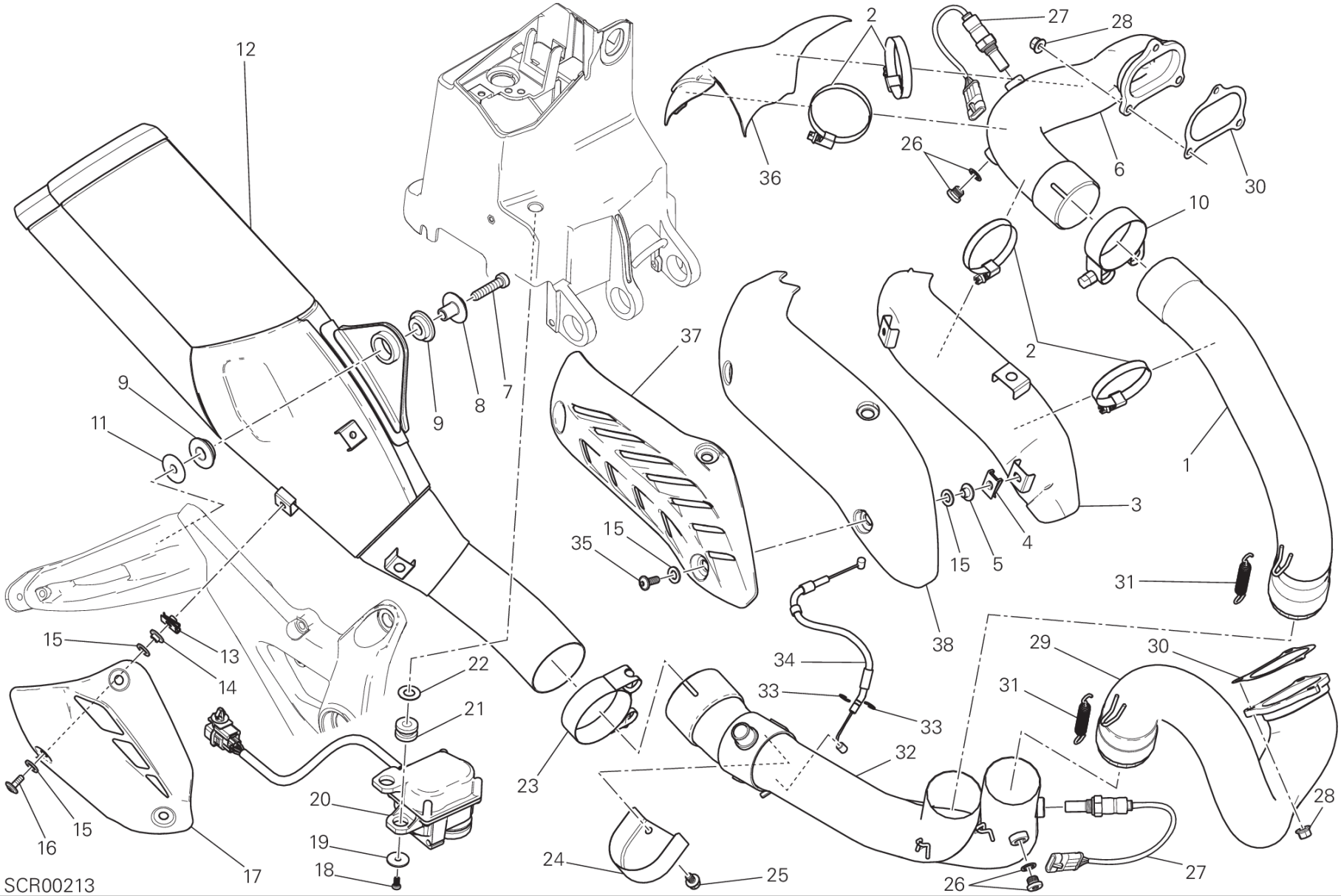
12
2
27
28
36
26
6
30
10
37
9
11
9
8
7
2
1
3
15
35
15
5
4
31
38
15
13
14
22
34
29
30
33
33
31
21
32
23
20
28
16
15
19
24
25
26
27
17
18
SCR00213

POS.	CODE	DESCRIPTION	QTY	START DATE	END DATE	VALIDITY	NOTES
35	77240423C	SCREW TBEIF M6X16 10.9	3	22/10/2013			
36	4601B274A	HEAT GUARD REAR VERTICAL	1	22/10/2013			
37	4601B881A	HEAT GUARD UPPER VERTICAL	1	22/10/2013			
38	4602B331A	COVER ASSEMBLY HEAT GUARD VERTICAL	1	22/10/2013			

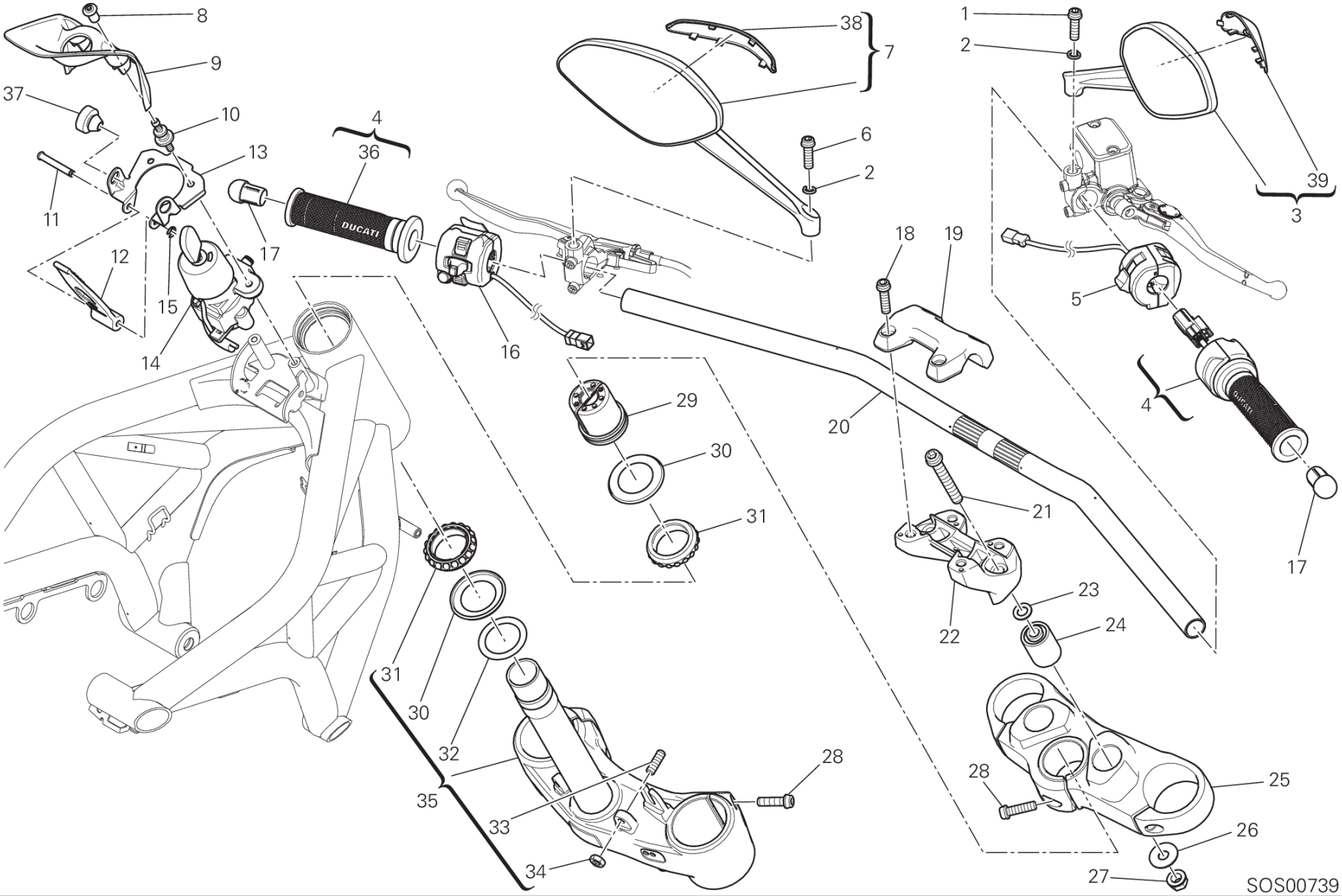
8
9
37
10
13
11
12
15
14
17
4
36
DUCATI
16
38
7
6
2
1
2
39
3
18
19
5
4
20
29
30
31
21
17
23
22
24
31
30
32
35
33
34
28
28
25
26
27
SOS00739

POS.	CODE	DESCRIPTION	QTY	START DATE	END DATE	VALIDITY	NOTES
1	77113741A	SCREW TCEIF M8X25	1	22/10/2013			
2	46210021A	SPRING WASHER 8 MM	2	22/10/2013			
3	52310441A	REAR-VIEW MIRROR R.H.	1	22/10/2013			
4	66020051F	THROTTLE CONTROL (Unit)	1	01/01/2014			
5	65010121E	RIGHT HANDLE SWITCH	1	01/08/2013			
6	77113731A	SCREW TCEIF M8X25, LEFT THREAD	1	22/10/2013			
7	52310451A	REAR-VIEW MIRROR L.H.	1	22/10/2013			
8	75011491AB	NUT, SPECIAL	2	22/10/2013			
9	4601A883A	COVER, IGNITION SWITCH	1	22/10/2013			
10	77110501A	SCREW, SPECIAL	2	22/10/2013			
11	82110901B	FOOTREST PIN	1	22/10/2013			
12	75910301B	RUBBER BAND FUEL TANK	1	15/01/2014			
13	83018601DA	BRACKET, FUEL TANK	1	09/06/2014			
14	65240231A	KEY-OPERATED SWITCH	1	04/04/2013			
15	88450031A	CIRCLIP E-TYPE	1	22/10/2013			
16	65110141A	LEFT HANDLE SWITCH	1	01/08/2013			
17	87210281A	BALANCER SET, HANDLE BAR	2	06/05/2014			
18	77157273B	SCREW	4	01/08/2013			
19	36015332AB	HANDLEBAR BRACKET, UPPER	1	01/06/2014			
20	36011551D	HANDLEBAR	1	01/06/2014			
21	77159418B	SCREW M10X1.25X70	2	01/08/2013			
22	36015352AB	HOLDER, HANDLE LOWER	1	25/11/2013			
23	85250401A	WASHER 10.5X18X1.6	2	01/08/2013			
24	70010541A	CUSHION, HANDLEBAR	2	01/08/2013			
25	34110992AC	STEERING HEAD	1	01/08/2013			
26	85210491B	WASHER 10.5X28X1.5	2	01/08/2013			
27	74840241AB	NUT M10X1.25X10	2	01/08/2013			
28	77157268B	SCREW	7	01/08/2013			
29	70310761AA	THREAD, STEERING HEAD TOP	1	22/10/2013			
30	93010041B	SEAL RING	2	31/07/2013			
31	70241231A	BEARING, STEERING NTN SF07A17P	2				
32	85211031A	WASHER	1	31/07/2013			
33	77850281A	THREADED DOWEL STEI M8X25	2	31/07/2013			
34	74750071A	NUT	2	31/07/2013			
35	342P0781BC	STEERING HEAD BASE (Unit)	1	01/08/2013			

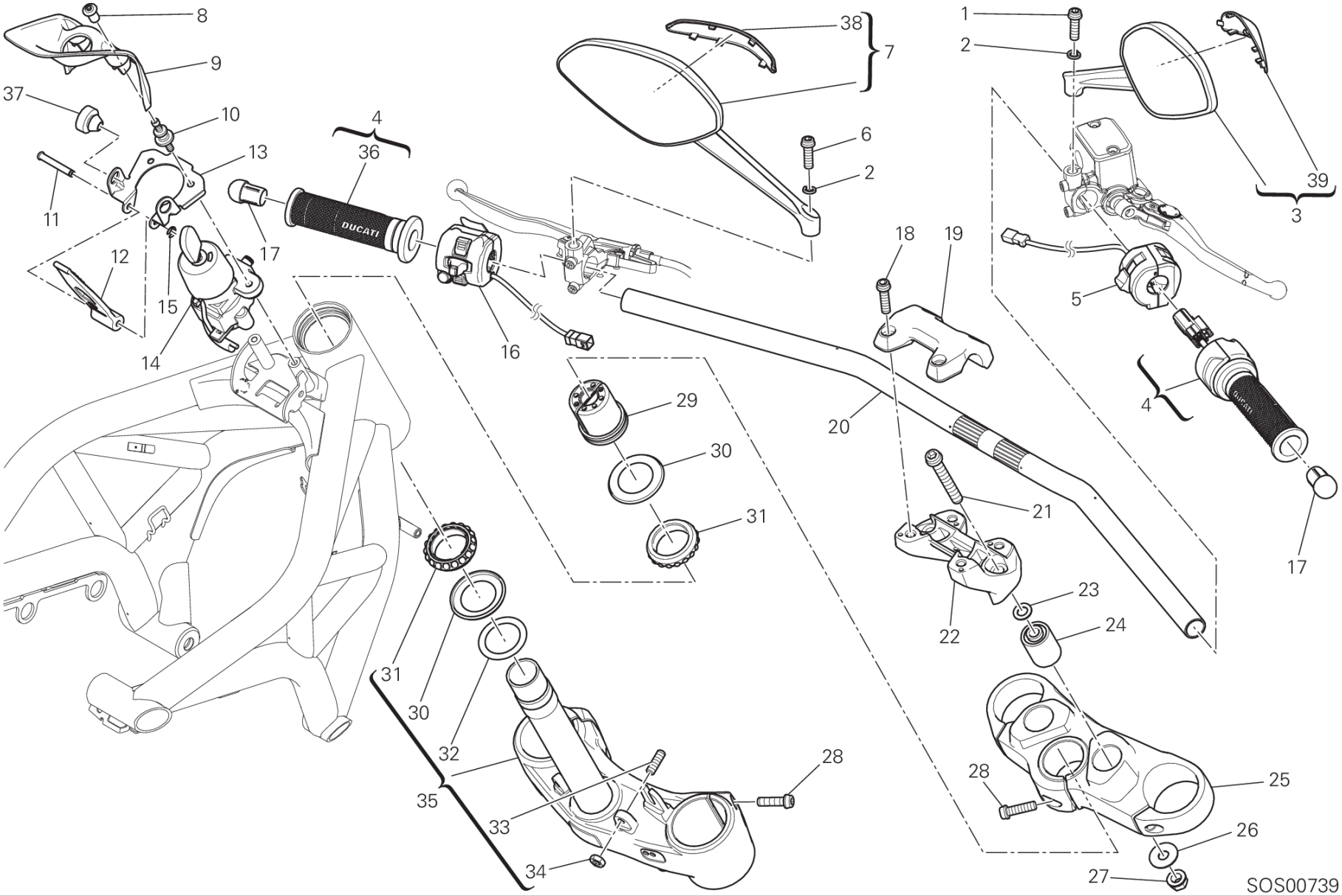
8
9
37
10
13
11
12
15
14
17
4
36
DUCATI
16
38
7
6
2
1
2
39
3
18
19
5
4
20
29
30
31
21
17
23
22
24
31
30
32
35
33
34
28
28
25
26
27
SOS00739

POS.	CODE	DESCRIPTION	QTY	START DATE	END DATE	VALIDITY	NOTES
36	36110131C	HAND GRIP LH	1	28/10/2013			
37	86611001A	PAD	2	09/06/2014			
38	24715051A	LEFT COVER	1				
39	24715041A	RIGHT COVER	1				

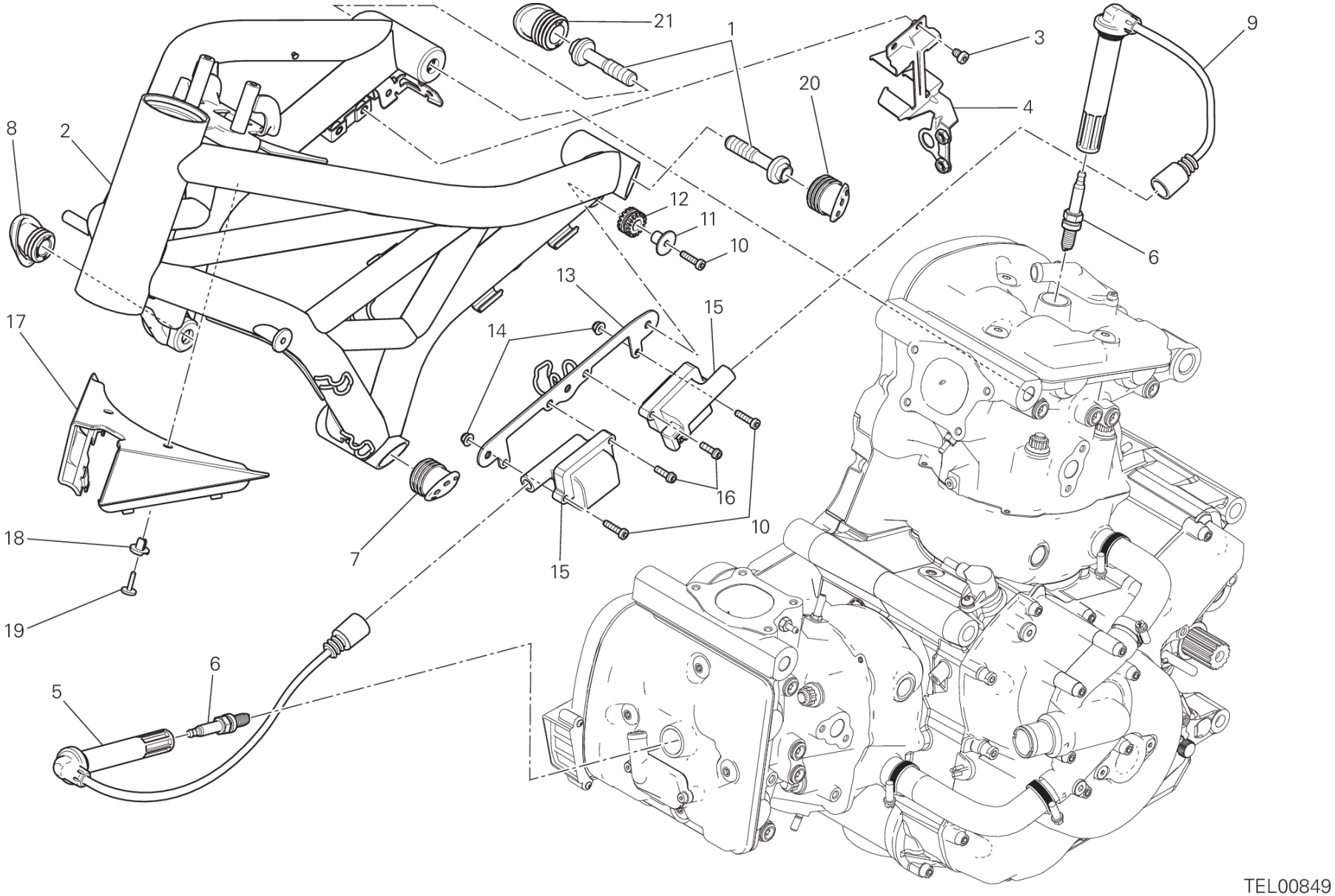
21
1
3
9
20
4
8
2
12
11
10
6
13
15
17
14
16
10
18
7
15
19
6
5
TEL00849

POS.	CODE	DESCRIPTION	QTY	START DATE	END DATE	VALIDITY	NOTES
1	77918291AA	SCREW, SPECIAL	4	22/10/2013			
2	47017241BA	FRAME RED	1	22/10/2013		MOD:M 821	
	47017241BG	FRAME BRONZE	1	22/10/2013		MOD:M 821	
3	77350618B	SCREW TCEIR M6X8	2	22/10/2013			
4	83018172AA	BRACKET, FUSE BOX	1	22/10/2013			
5	67110601A	SPARK PLUG CABLE, HORIZONTAL HEAD	1	22/10/2013			
6	67040451A	SPARK PLUG	2	26/02/2013			
7	87210951A	LEFT PAD Front	1	05/05/2014			
8	87210941A	RIGHT PAD Front	1	05/05/2014			
9	67110591A	SPARK PLUG CABLE, VERTICAL HEAD	1	22/10/2013			
10	77354743B	SCREW TCEIR M5X20 DIN6912 8.8	5	22/10/2013			
11	71614511AA	SPACER	3	22/10/2013			
12	76410221A	VIBRATION DAMPER PAD	3	22/10/2013			
13	83018431AA	BRACKET, COIL	1	22/10/2013			
14	74810351B	NUT	2	22/10/2013			
15	38010151A	IGNITION COIL	2	05/05/2014			
16	77156413B	SCREW TCEIF M5X16	2	22/10/2013			
17	48211951A	COVER TUBE	1	22/10/2013			
18	85041051A	RIVET, FEMALE	2	22/10/2013			
19	85041041A	RIVET, MALE	2	22/10/2013			
20	87210922A	LEFT PAD	1	10/01/2014			
21	87210912A	RIGHT PAD	1	10/01/2014			

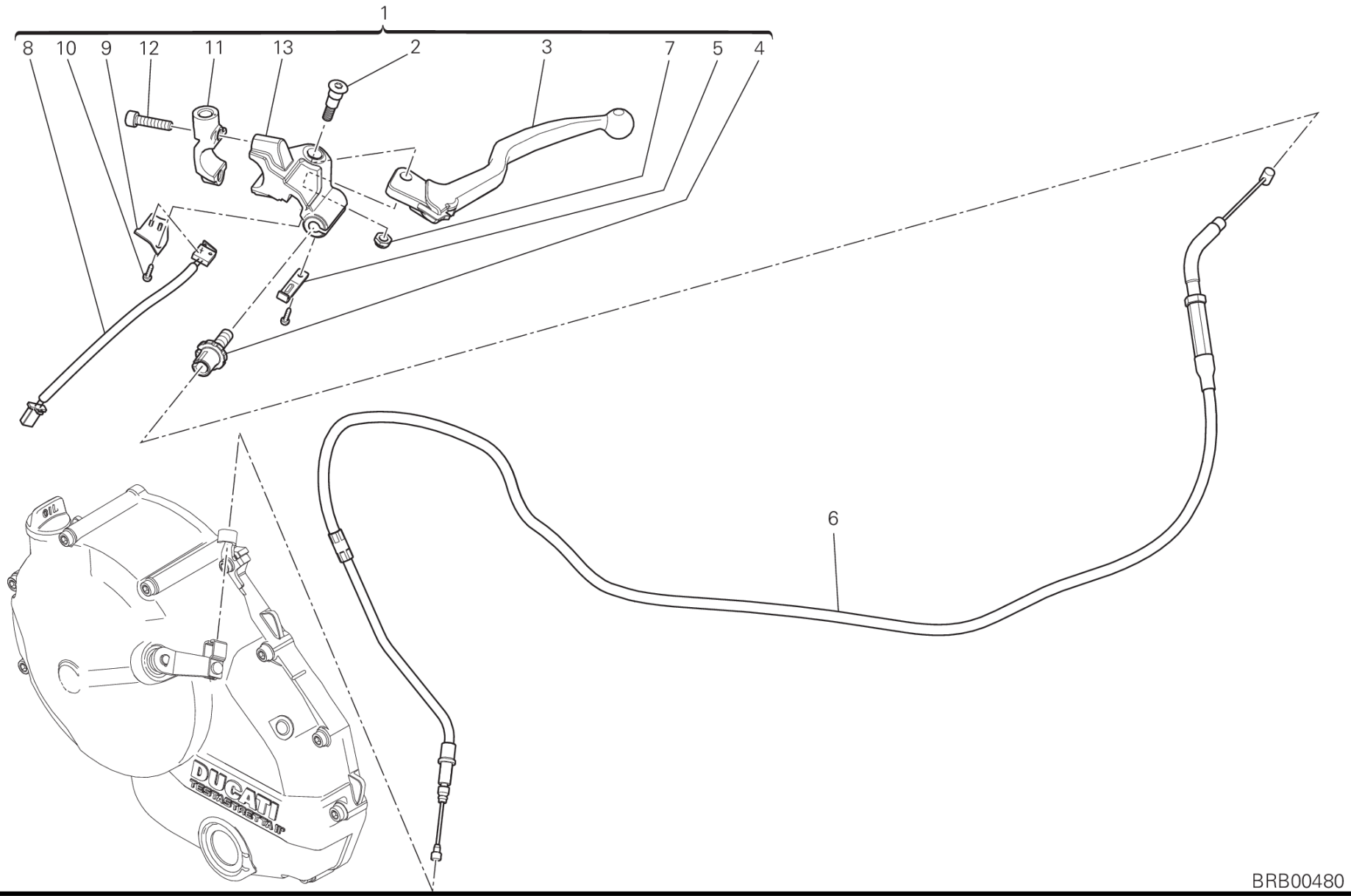
1
8
10
9
12
11
13
2
3
7
5
4
6
OIL
DUCATI
TESTASTRETTA 11°
BRB00480

POS.	CODE	DESCRIPTION	QTY	START DATE	END DATE	VALIDITY	NOTES
1	63620031B	CLUTCH LEVER (Unit)	1	09/06/2014	15/07/2014		
2	77917741AA	SCREW, SPECIAL	1	01/01/2012			
3	63640011B	CLUTCH LEVER	1	01/06/2014			
4	77917731AA	REGULATOR	1	01/01/2012			
5	79940161B	SPRING	1	01/01/2012			
6	73210452B	FLEXIBLE CABLE	1	05/05/2014			
7	74841021A	NUT	1				
8	53940731A	MICROSWITCH	1				
9	53940021B	HOLDER	1				
10	77140901A	SCREW	1				
11	62640911A	BRACKET, CLUTCH MASTER CYLINDER	1	30/05/2014			
12	77140281A	SCREW	2	01/06/2014			
13	8291B271AA	HOLDER	1	01/06/2014			

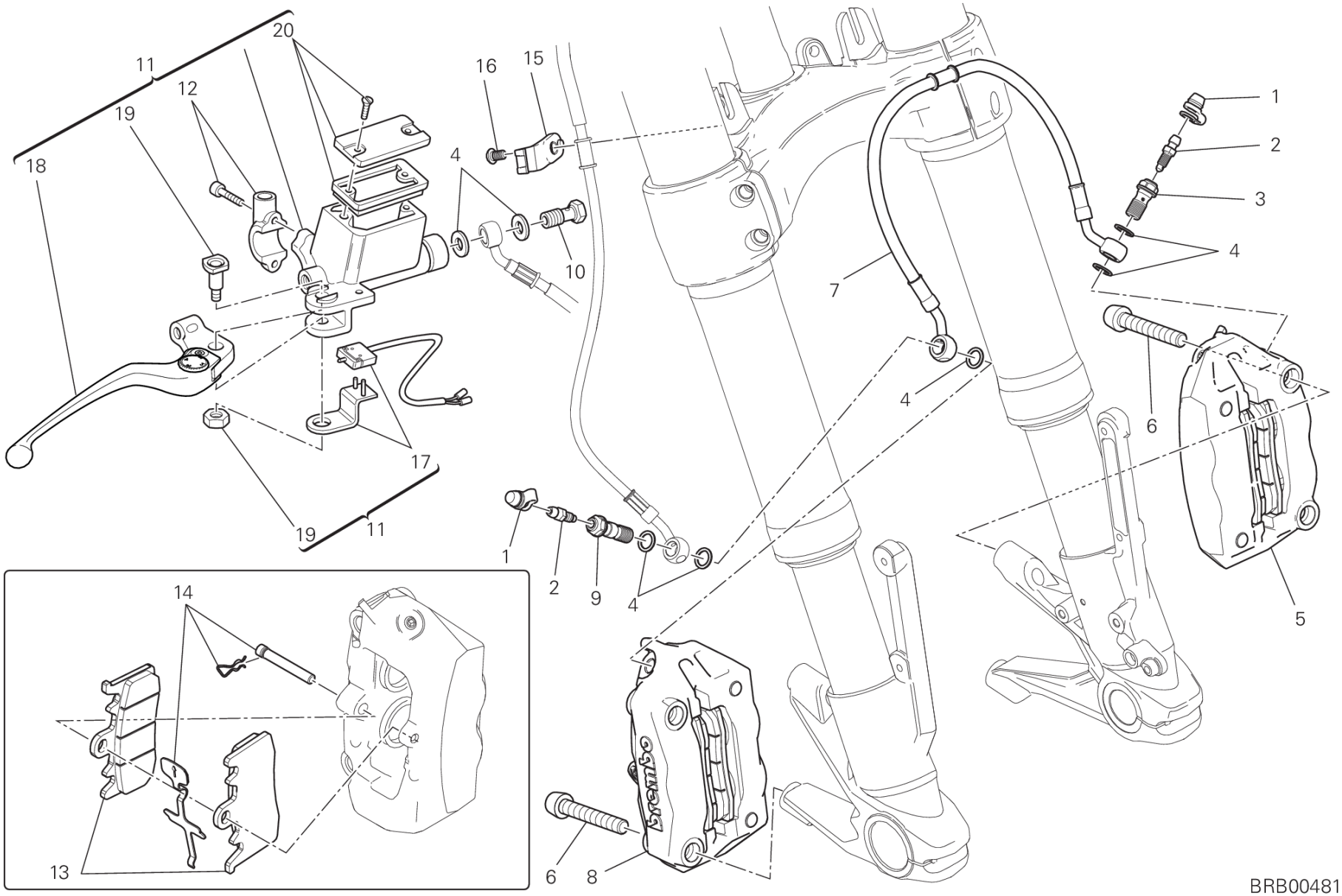
20
11
12
19
18
16
15
4
10
1
2
3
4
7
4
6
5
17
19
11
1
2
9
4
14
13
6
8
BRB00481

POS.	CODE	DESCRIPTION	QTY	START DATE	END DATE	VALIDITY	NOTES
1	61240052A	DUST COVER (SACCHETTO Q.tà 20)	2	05/12/2012			
2	18710021A	VALVE, BREATHER	2	05/12/2012			
3	77913971A	BOLT, BRAKE HOSE	1	05/12/2012			
4	85250241A	WASHER 10X14X1	7	05/12/2012			
5	61041291C	LEFT FRONT BRAKE CALIPER	1	05/12/2012			
6	77913311D	SCREW M 10 X 60	4	15/11/2012			
7	61810511A	HOSE, FRONT BRAKE CALIPER-CALIPER	1	02/04/2014			
8	61041301C	RIGHT FRONT BRAKE CALIPER	1	05/12/2012			
9	77914651A	BOLT, BRAKE HOSE	1	05/12/2012			
10	77914151A	BOLT, BRAKE HOSE	1	05/12/2012			
11	62440971A	FRONT BRAKE PUMP	1	02/04/2014			
12	62640901A	BRACKET, MASTER CYLINDER	1	02/04/2014			
13	61341021A	FRONT BRAKE PADS SET	2	01/07/2012			
14	61240511A	SPARE PIN AND SPRING	1	01/07/2012			
15	83018691A	GUIDE, FRONT BRAKE HOSE	3	05/05/2014			
16	77240403C	SCREW	1	15/11/2012			
	77510541A	SCREW TBEI M6X10	1	05/05/2014			
17	53940721A	MICROSWITCH	1				
18	63140511A	LEVER, FRONT BRAKE	1	20/01/2013			
19	62640601A	BOLT, PIVOT	1				
20	89340091A	THE BRAKE CAP	1				

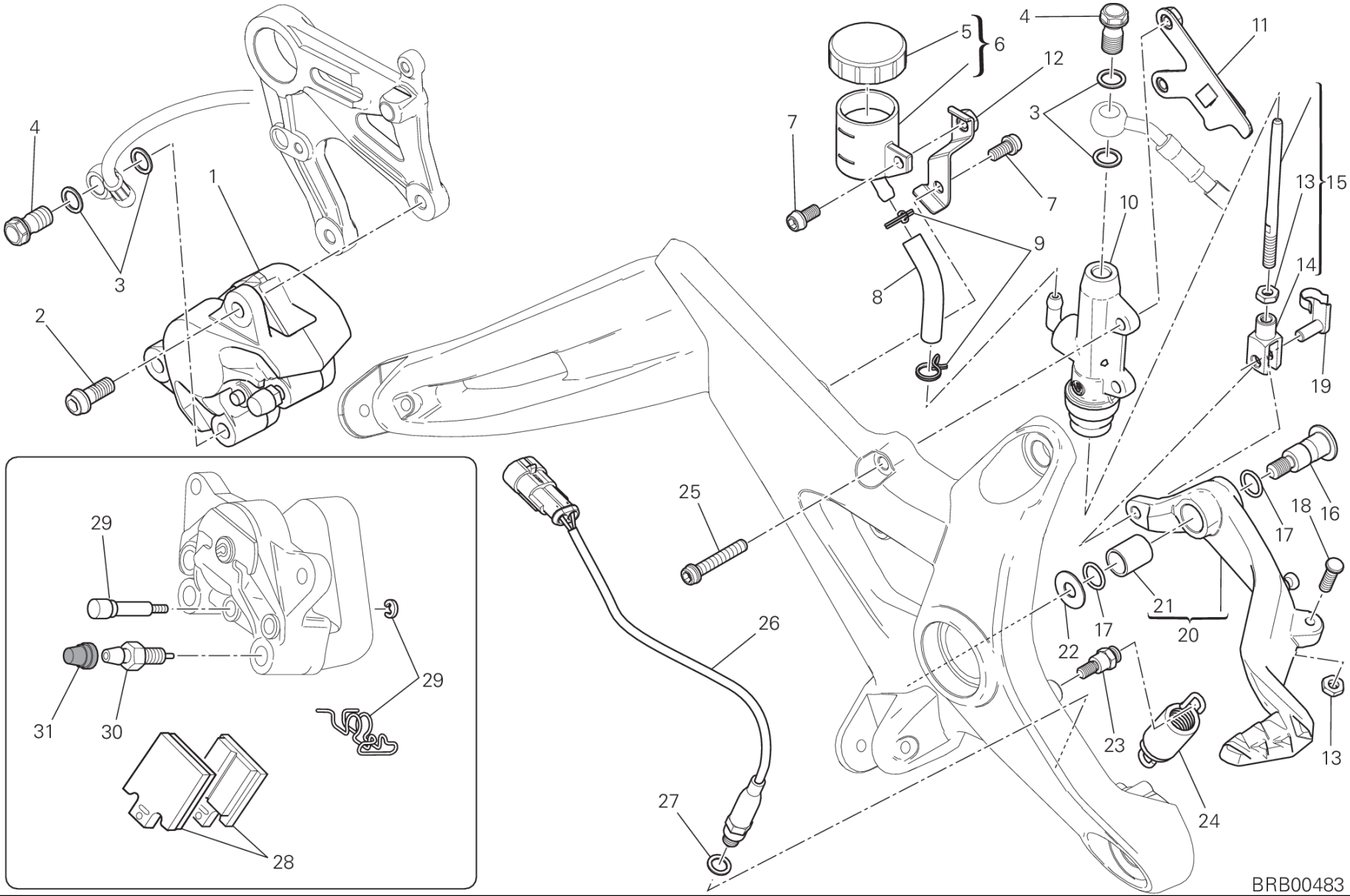
1
2
3
4
5
6
7
8
9
10
11
12
13
14
15
16
17
18
19
20
21
22
23
24
25
26
27
28
29
30
31
BRB00483

POS.	CODE	DESCRIPTION	QTY	START DATE	END DATE	VALIDITY	NOTES
1	61140421A	REAR BRAKE CALIPER	1	20/09/2013			
2	77157238B	SCREW TCEIF M8X20	2	22/10/2013			
3	85250241A	WASHER 10X14X1	4	20/09/2013			
4	77913662AB	BOLT, BRAKE HOSE	2	20/09/2013			
5	89340051A	COVER MASTER CYLINDER	1	01/05/2011			
6	58540081A	RESERVOIR, BRAKE FLUID	1	20/09/2013			
7	77156638B	SCREW TCEIF M6X12	2	22/10/2013			
8	87710381A	HOSE, OIL	1	20/09/2013			
9	74140431A	CLAMP	2	20/09/2013			
10	62540201A	REAR BRAKE PUMP	1	20/09/2013			
11	8291C861BA	CONNECTOR HOLDER SWITCH, STOP	1	22/10/2013			
12	82717201BA	BRACKET, BRAKE FLUID TANK	1	19/09/2013			
13	74750051B	NUT	2	01/03/2013			
14	18410051A	FORK HEADS DIN 71752	1	01/03/2013			
15	11723531AA	ROD, BRAKE (Unit)	1	22/10/2013			
16	82111701CA	PIN PEDAL	1	19/09/2013			
17	88641161A	O-RING	2	19/09/2013			
18	77912371A	SCREW	1	19/09/2013			
19	85010151A	QUICK FASTENING	1	22/10/2013			
20	45720571AA	BRAKE CONTROL LEVER (Unit)	1	19/09/2013			
21	71210341A	BUSH	1	01/03/2013			
22	85210532A	WASHER 8.2X20X1	1	19/09/2013			
23	82112731A	PIN	1	19/09/2013			
24	79925771A	COMPLETE SPRING	1	19/09/2013			
25	77156723B	SCREW	2	22/10/2013			
26	53940031C	SWITCH, STOP	1	19/09/2013			
27	42020008A	COPPER GASKET 11X8.2X1	1	19/09/2013			
28	61340951A	REAR BRAKE PADS SET	1	10/06/2013			
29	61240161A	PAD PINS OVERHAUL KIT	1				
30	63140161A	FRONT CALIPER DRAIN SCREW	1				
31	61240081A	DUST PLUG	1				

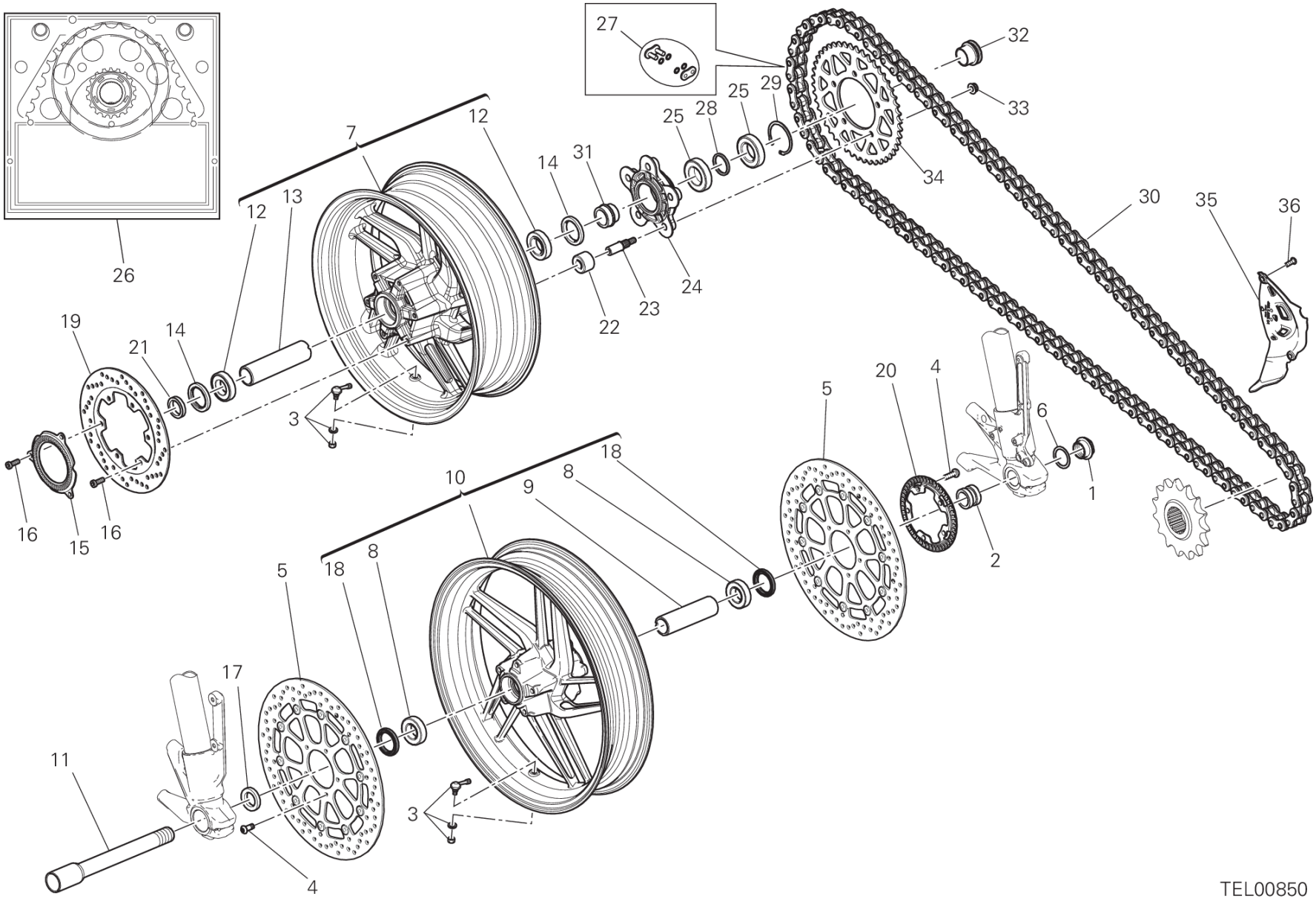
27
32
33
25
29
25
28
12
7
14
31
34
30
35
36
12
13
26
24
23
22
19
21
14
3
20
4
5
6
1
18
10
8
9
16
15
16
2
5
18
8
17
11
3
4
TEL00850

POS.	CODE	DESCRIPTION	QTY	START DATE	END DATE	VALIDITY	NOTES
1	74810651A	NUT	1				
2	71311973A	LEFT SPACER	1	05/05/2014			
3	49720041A	VALVE, TUBELESS TIRE	2				
4	72010513C	SCREW	10				
5	49241011A	FRONT BRAKE DISC	2	01/03/2013			
6	85212221A	WASHER 30X40X1	1				
7	50221611AA	REAR WHEEL RIM RED	1	31/05/2013			
	50221671AA	REAR WHEEL RIM BLACK	1	21/01/2014			
8	70250621A	BEARING	2	15/04/2013			
9	71410941A	INNER SPACER	1	15/04/2013			
10	50121761AA	FRONT WHEEL RIM BLACK	1	01/03/2013			
	50121761AB	FRONT WHEEL RIM RED	1	11/03/2014			
11	81910601A	FRONT WHEEL SPINDLE	1	05/05/2014			
12	70250681A	BEARING	2	31/05/2013			
13	71411041AA	SPACER	1	29/11/2012			
14	93040391A	SEAL RING 40X55X7	2	10/05/2013			
15	50410061A	REAR PHONIC WHEEL	1	10/05/2013			
16	77310071A	SCREW	6	31/05/2013			
17	71311961A	RIGHT SPACER	1	05/05/2014			
18	93041501A	SEAL RING	2				
19	49240032A	REAR BRAKE DISC	1	10/05/2013			
20	50410051A	FRONT PHONIC WHEEL	1				
21	71312051A	INNER SPACER	1	20/07/2013			
22	70010591A	WHEEL RUNNER BUSH	5	31/05/2013			
23	82114741AA	SPRING DRIVE FIXING BUSH	5	23/09/2013			
24	16010922A	REAR SPROCKET FLANGE	1	18/01/2013			
25	70240381A	BEARING, 35X62X14	2	18/04/2013			
26	67620901A	FINAL DRIVE KIT	1	05/05/2014			
27	67740201A	CHAIN LINK	1	10/04/2013			
28	71311841A	INNER SPACER	1	18/04/2013			
29	88440061A	CIRCLIP	1	18/04/2013			
30	67640941A	CHAIN 107+1	1	05/05/2014			
31	7131A371AA	SPACER	1	12/03/2013			
32	7131A361AA	FINAL SPROKET SLEEVE	1	12/03/2013			
33	74810461A	NUT, FLANGE M10X1	5	12/03/2013			

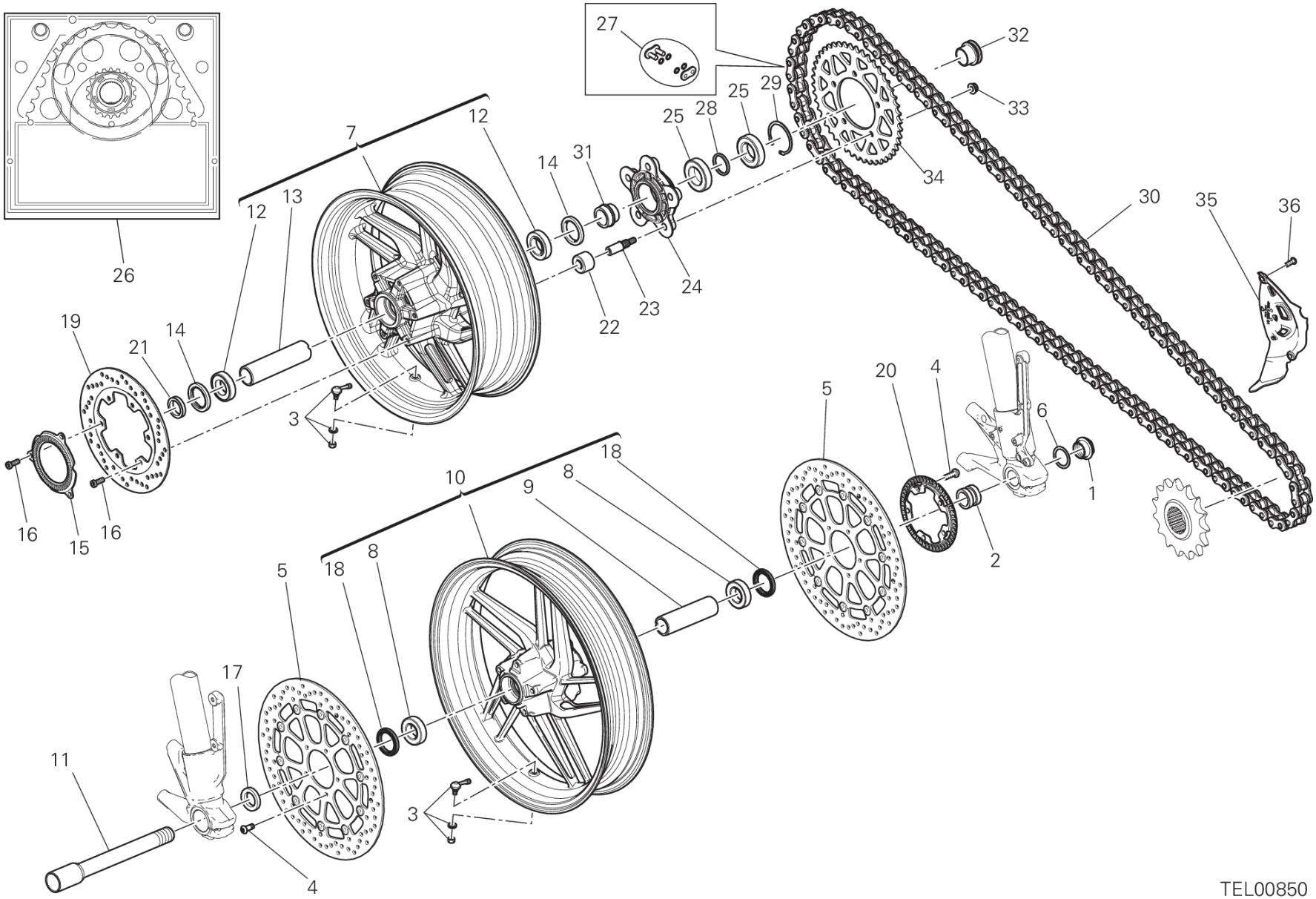
27
32
33
25
29
25
28
12
7
14
31
34
30
35
36
12
13
26
24
23
22
19
21
14
3
20
4
5
6
18
10
8
9
1
16
15
16
2
5
18
8
17
11
3
4
TEL00850

POS.	CODE	DESCRIPTION	QTY	START DATE	END DATE	VALIDITY	NOTES
34	49411651AA	REAR SPROCKET T46	1	28/04/2014			
35	46016391A	CHAIN COVER	1	05/05/2014			
36	77550213C	SCREW TBEI M6X16	2	05/05/2014			

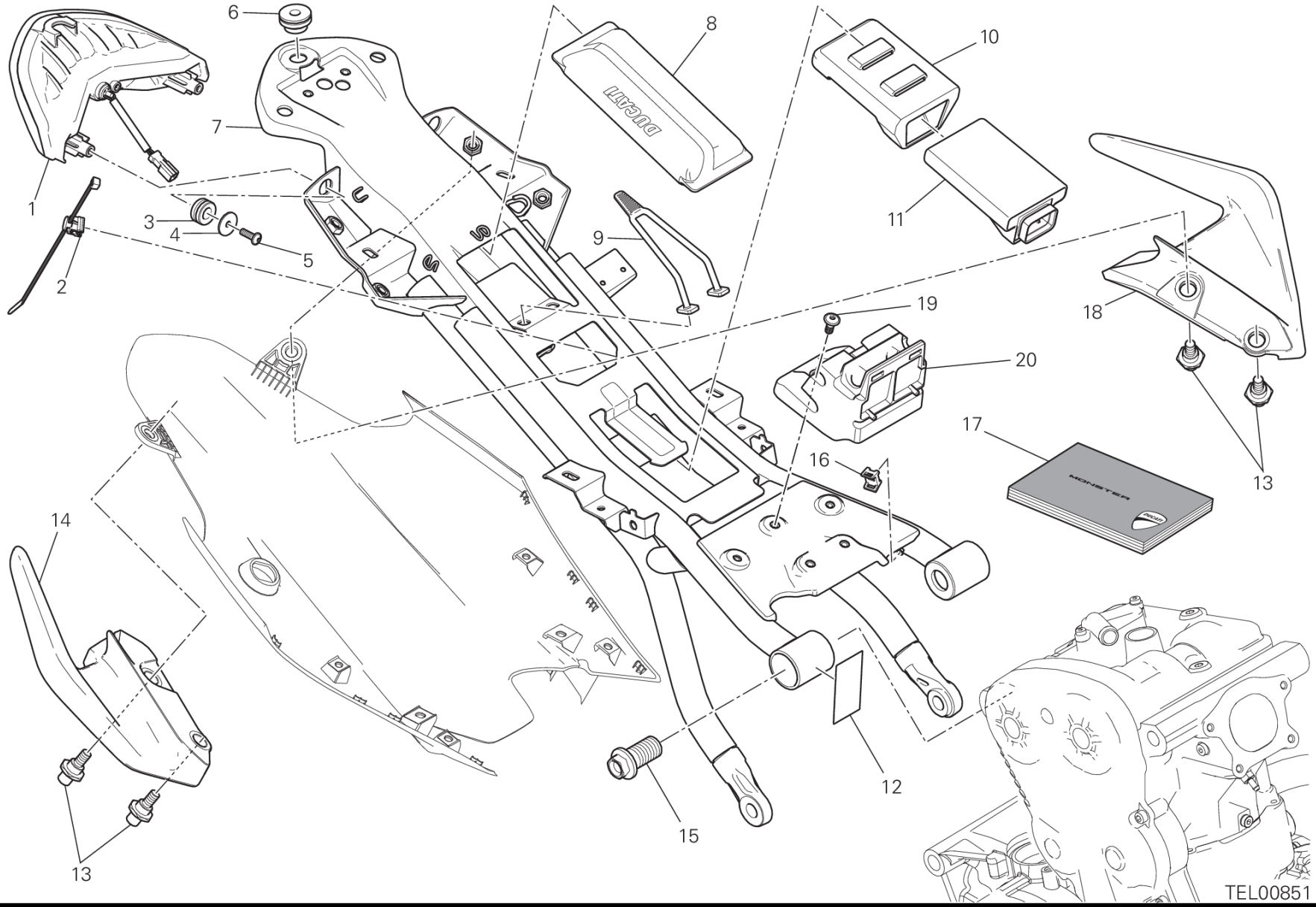
6
8
10
7
1
3
4
5
2
9
11
19
18
20
17
16
13
14
12
15
13
TEL00851

POS.	CODE	DESCRIPTION	QTY	START DATE	END DATE	VALIDITY	NOTES
1	52510482B	TAILLIGHT	1	05/06/2014			
2	75840771A	FAIRLEAD	1	01/08/2013			
3	76412101A	RUBBER PAD	2	05/06/2014			
4	85241711A	WASHER 5.3X20X1.5	2	01/08/2013			
5	77440041A	SCREW, TAPPING M5X16	2	22/10/2013			
6	76412091A	VIBRATION DAMPER PAD	1	05/06/2014			
7	47017251DA	REAR FRAME COMP.	1	01/10/2013			
8	69720291B	TOOLS KIT	1	20/10/2013			
9	75910311A	RUBBER BAND, TOOLS KIT	1	20/10/2013			
10	86611521A	VIBRATION DAMPER HOLDER	1	01/08/2013			
11	38510351C	BLACKBOX UNIT	1	10/06/2014			
12	92610051A	GUARD	1	01/08/2013			
13	77918671AA	SCREW, SPECIAL	4	01/10/2013			
14	80610381B	GRIP,GRAB RAIL,RH	1	25/10/2013			
15	77918301AB	SCREW, SPECIAL	2	05/05/2014			
16	85040671A	CLAMP TUCKER	6	25/11/2013			
17	91372621A	OWNER'S MANUAL	1			XST:AUS,EUR,FRA	DEU-FRA-GBR-ITA
	91372621B	OWNER'S MANUAL	1			XST:AUS,EUR,FRA,JAP	ESP-FRA-GBR-JPN
	91372621C	OWNER'S MANUAL	1			XST:EUR	ESP-GRC-PRT
	91372621D	OWNER'S MANUAL	1			XST:EUR,FRA	FRA-NLD-KOR-GBR
	91372621E	OWNER'S MANUAL	1			XST:EUR	DNK-FIN-NOR-SWE
	91372621F	OWNER'S MANUAL	1			XST:EUR	CZE-POL-SVK-SLO
	91372621G	OWNER'S MANUAL	1			XST:EUR	BGR-HUN-ROU-RUS
	91372621L	OWNER'S MANUAL	1			XST:EUR	BRA
	91372621T	OWNER'S MANUAL	1			XST:EUR	GBR-THA
18	80610371B	GRIP,GRAB RAIL,LH	1	25/10/2013			
19	77240418C	SCREW	3	01/10/2013			
20	8291C091A	SEAT SUPPORT	1	01/08/2013			

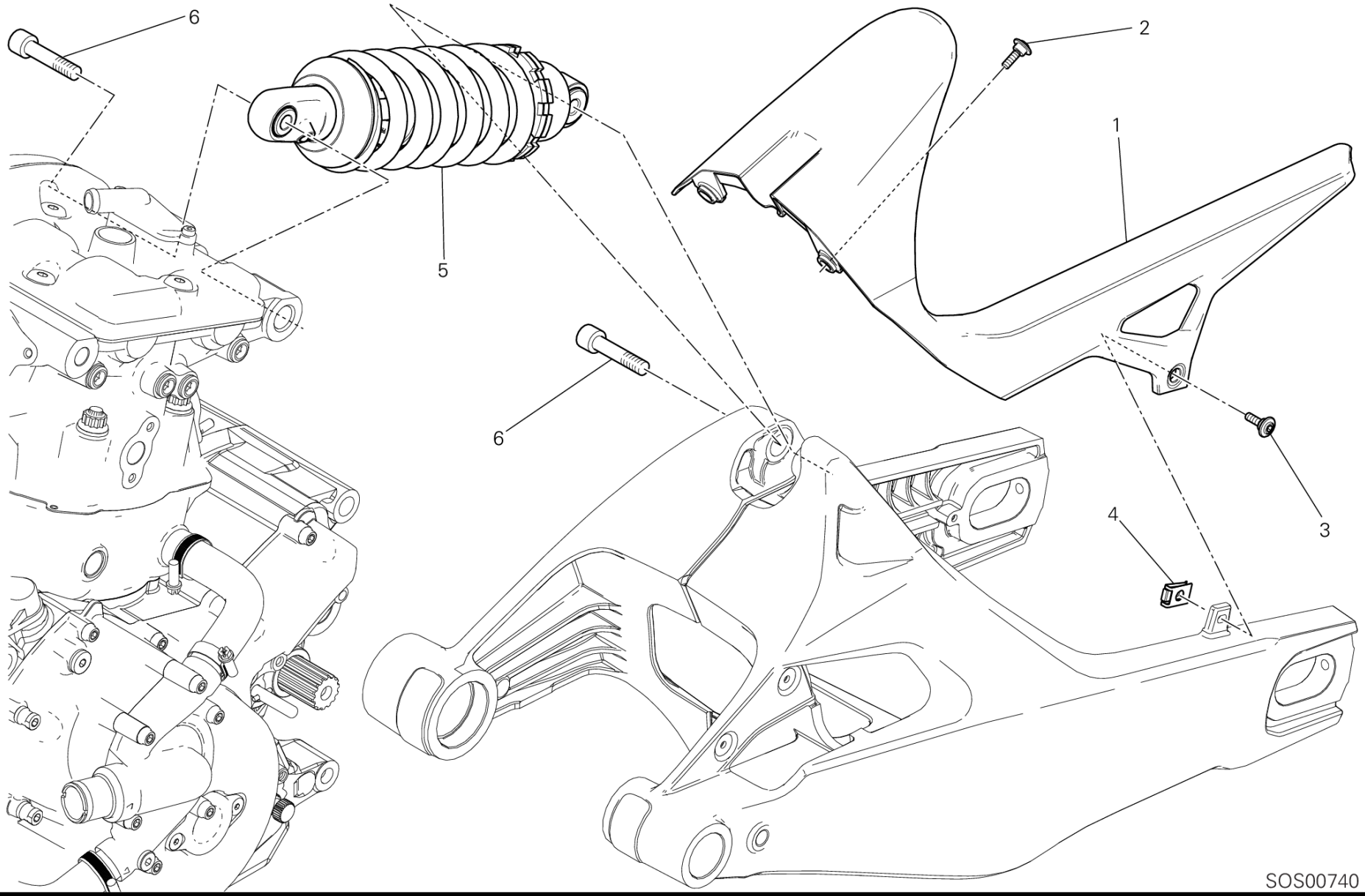
6
2
1
5
6
4
3
SOS00740

POS.	CODE	DESCRIPTION	QTY	START DATE	END DATE	VALIDITY	NOTES
1	56510761A	REAR MUDGUARD	1	05/05/2014			
2	77210941C	SCREW	2	05/05/2014			
3	77210943B	SCREW, SPECIAL	1	05/05/2014			
4	85041421A	QUICK FASTENING	1	05/05/2014			
5	36521332A	REAR SHOCK ABSORBER	1	05/05/2014			
6	77915041A	SCREW, SPECIAL	2	22/10/2013			

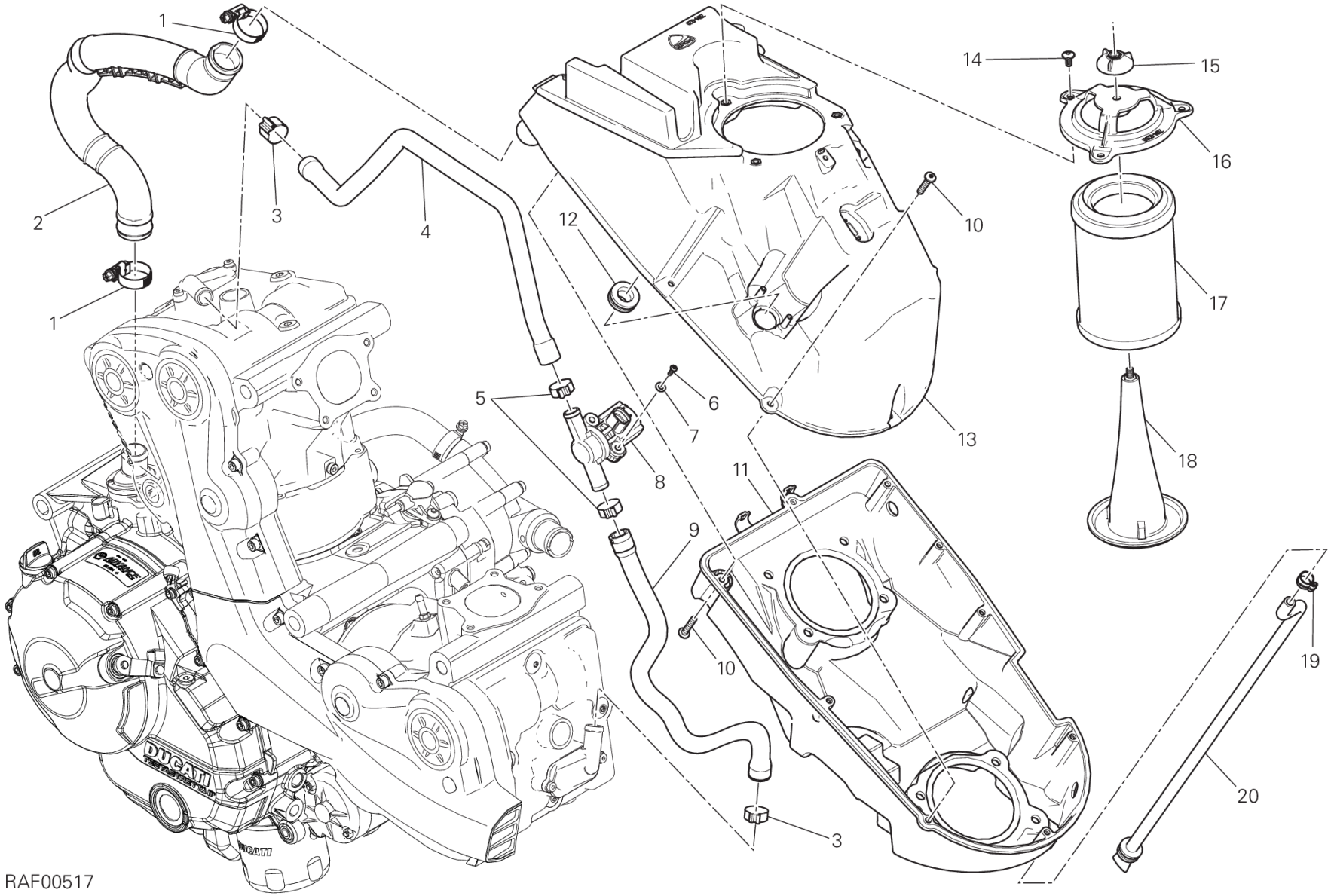
1
2
1
3
4
5
6
7
8
9
10
10
11
12
13
14
15
16
17
18
19
20
3
RAF00517

DRAWING 029 - AIR INTAKE - OIL BREATHER [MOD:M 821]

GROUP FRAME

POS.	CODE	DESCRIPTION	QTY	START DATE	END DATE	VALIDITY	NOTES
1	74141921A	CLAMP 16-27 MM	2	22/10/2013			
2	87611232A	HOSE, BLOW-BY	1	22/10/2013			
3	74142371A	CLAMP	2	05/05/2014			
4	87611211A	DUCT, AIR VERTICAL	1	12/03/2013			
5	74142401A	CLAMP	2	25/10/2013			
6	77440213C	SCREW	1	12/03/2013			
7	85240211A	WASHER 4.7X10X1	1	12/03/2013			
8	65540091A	ACTUATOR	1	12/03/2013			
9	87611221B	DUCT, AIR HORIZONTAL	1	01/09/2013			
10	77440131A	SCREW, TAPPING 5X25 WN1411	9	12/03/2013			
11	44212781B	AIR FILTER BOX LOWER	1	29/03/2014			
12	76411621A	RUBBER PAD	1	12/03/2013			
13	44212791D	AIR FILTER BOX UPPER	1	17/06/2014			
14	77240253C	SCREW	3	12/03/2013			
15	70310481A	RING NUT	1	12/03/2013			
16	24612162A	FILTER COVER UNIT	1	01/09/2013			
17	42610191A	FILTER, AIR	1	12/03/2013			
18	82919611A	CAGE, AIR FILTER	1	12/03/2013			
19	74140651A	CLAMP	1	12/03/2013			
20	59014471A	HOSE, DRAIN AIRBOX	1	12/03/2013			

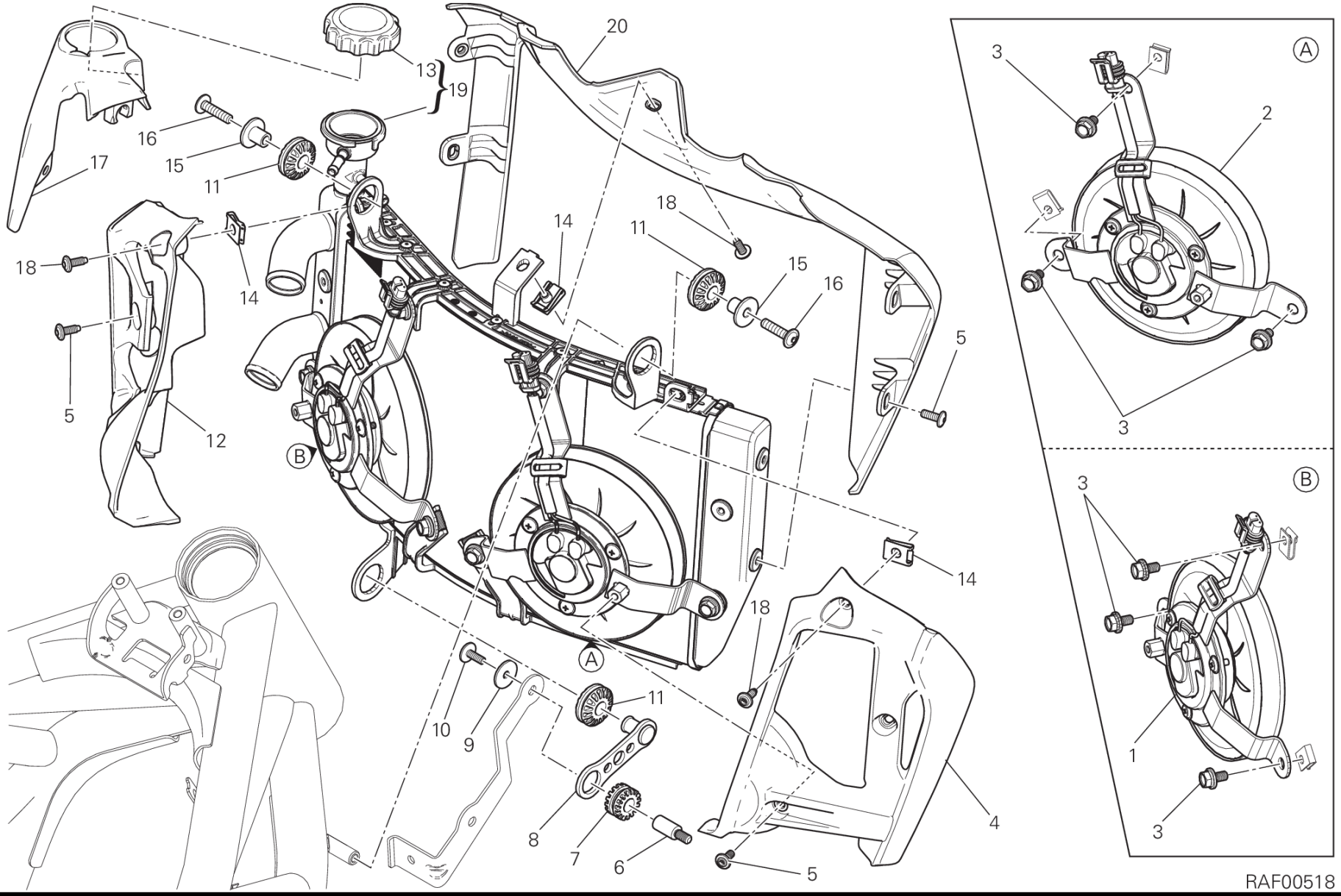
20
13
19
16
15
17
11
18
14
5
12
B
A
10
9
8
7
6
4
3
2
1
RAF00518

DRAWING 030 - WATER COOLER [MOD:M 821]

GROUP FRAME

POS.	CODE	DESCRIPTION	QTY	START DATE	END DATE	VALIDITY	NOTES
1	55040271A	ELECTRIC FAN, LEFT	1				
2	55040281A	ELECTRIC FAN, RIGHT	1				
3	77250988B	SCREW TEF M6X14	6				
4	48016481A	AIR SHROUD CYLINDER RIGHT	1	25/11/2013			
5	77211091A	SCREW TBEI M5X12	8	28/10/2013			
6	77916081A	SCREW, SPECIAL	1	22/10/2013			
7	76410221A	VIBRATION DAMPER PAD	1	28/10/2013			
8	83018971A	BRACKET	1	19/09/2013			
9	85241711A	WASHER 5.3X20X1.5	1	22/10/2013			
10	77510351A	SCREW TBEI M5X14	1	22/10/2013			
11	76411361A	VIBRATION DAMPER PAD	3	28/10/2013			
12	48016471A	AIR SHROUD CYLINDER LEFT	1	25/11/2013			
13	87240921A	RADIATOR CAP	1				
14	85040551A	QUICK FASTENING	3	19/09/2013			
15	71313041A	SPACER	2	28/10/2013			
16	77210971A	SCREW TBEI M6X25	2	22/10/2013			
17	48016242B	COVER	1	22/10/2013			
18	77211091C	SCREW	3	28/10/2013			
19	54841032A	WATER COOLER ASSY	1	25/11/2013			
20	48016171B	COVER Front	1	28/10/2013			

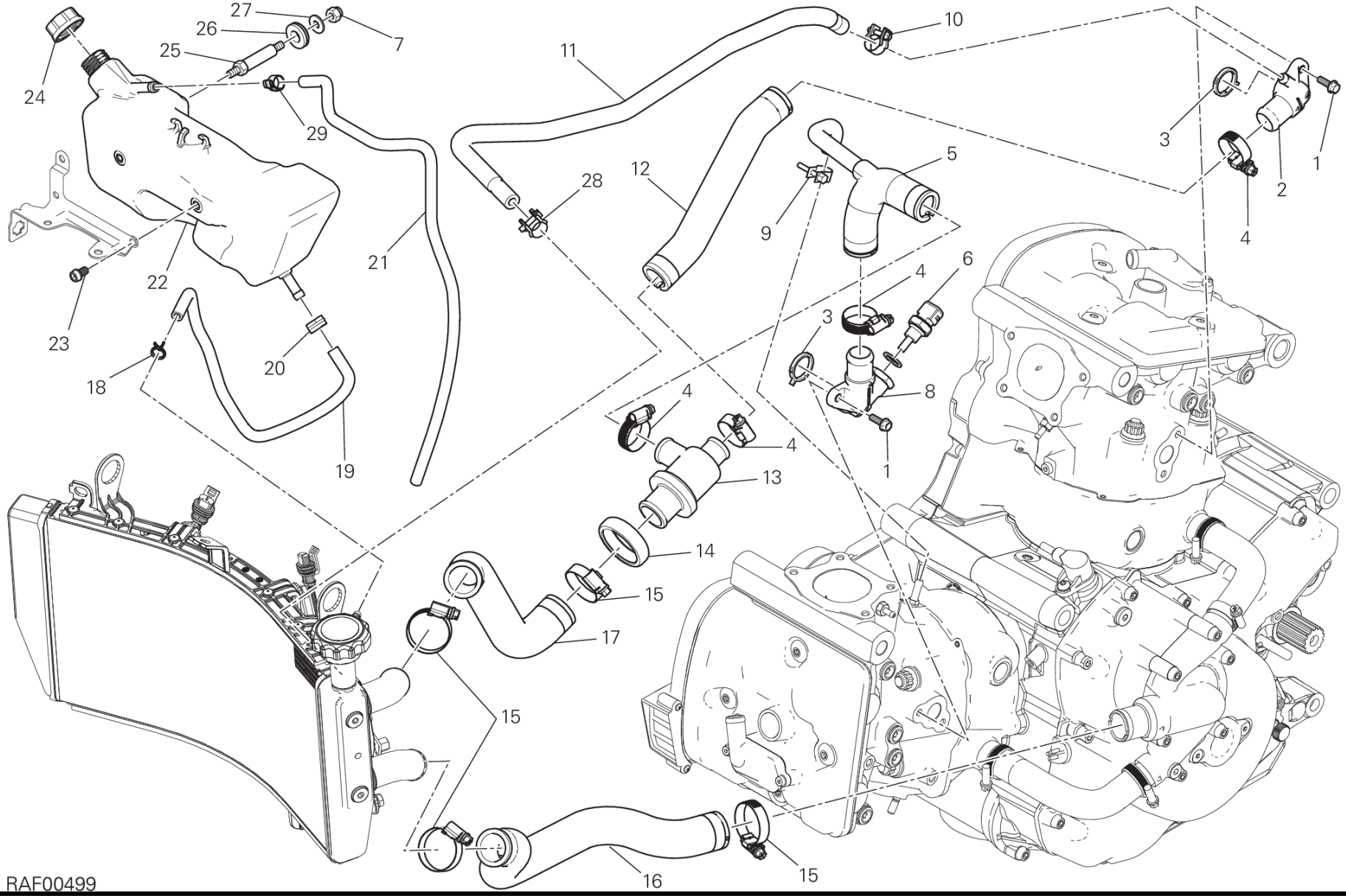
27
26
25
7
24
29
11
10
3
1
2
4
5
12
28
9
21
22
23
20
18
19
4
6
3
8
1
4
4
13
14
15
17
15
16
15
RAF00499

POS.	CODE	DESCRIPTION	QTY	START DATE	END DATE	VALIDITY	NOTES
1	77210623B	SCREW	4	18/02/2013			
2	81413261A	JOINT, WATER HOSE VERTICAL	1	18/02/2013			
3	88641031A	O-RING	2	18/02/2013			
4	74141921A	CLAMP 16-27 MM	4	18/02/2013			
5	80012311A	THERMOSTAT PUMP HOSE HORIZONTAL	1	22/10/2013			
6	55240131A	WATER TEMPERATURE SENSOR	1	18/02/2013			
7	74941113B	NUT	1	22/10/2013			
8	81412361C	JOINT, WATER HOSE HORIZONTAL	1	18/02/2013			
9	74140011A	CLAMP 12MM	1	22/10/2013			
10	74142121A	CLAMP	1	22/10/2013			
11	80012301A	BREATHER PIPE VERTICAL HEAD	1	28/10/2013			
12	80012321A	THERMOSTAT PUMP HOSE VERTICAL	1	22/10/2013			
13	55340041A	THERMO-SWITCH	1	22/10/2013			
14	88110461A	THERMOSTAT PROTECTION RING	1	22/10/2013			
15	74141901A	CLAMP 20-35 MM	4	22/10/2013			
16	80012341A	HOSE PUMP/COOLER	1	22/10/2013			
17	80012332A	HOSE COOLER/THERMOSTAT	1	22/10/2013			
18	74140431A	CLAMP	1	22/10/2013			
19	93410212A	HOSE, DRAIN	1	25/10/2013			
20	74141711A	CLAMP 10-7 MM	1	01/08/2013			
21	87610581A	PIPE	1	12/02/2014			
22	58510822B	TANK, WATER RESERVOIR	1	01/08/2013			
23	77156623B	SCREW TCEIF M6X10 8.8	2	01/08/2013			
24	89310143A	TANK CAP	1	01/08/2013			
25	77116671AA	HOLDER	1	01/08/2013			
26	76410981A	VIBRATION DAMPER PAD	1	22/10/2013			
27	85211911A	WASHER 6.4X16X1.5	1	22/10/2013			
28	74142181A	CLAMP	1	25/11/2013			
29	74140641A	CLAMP	1	12/02/2014			

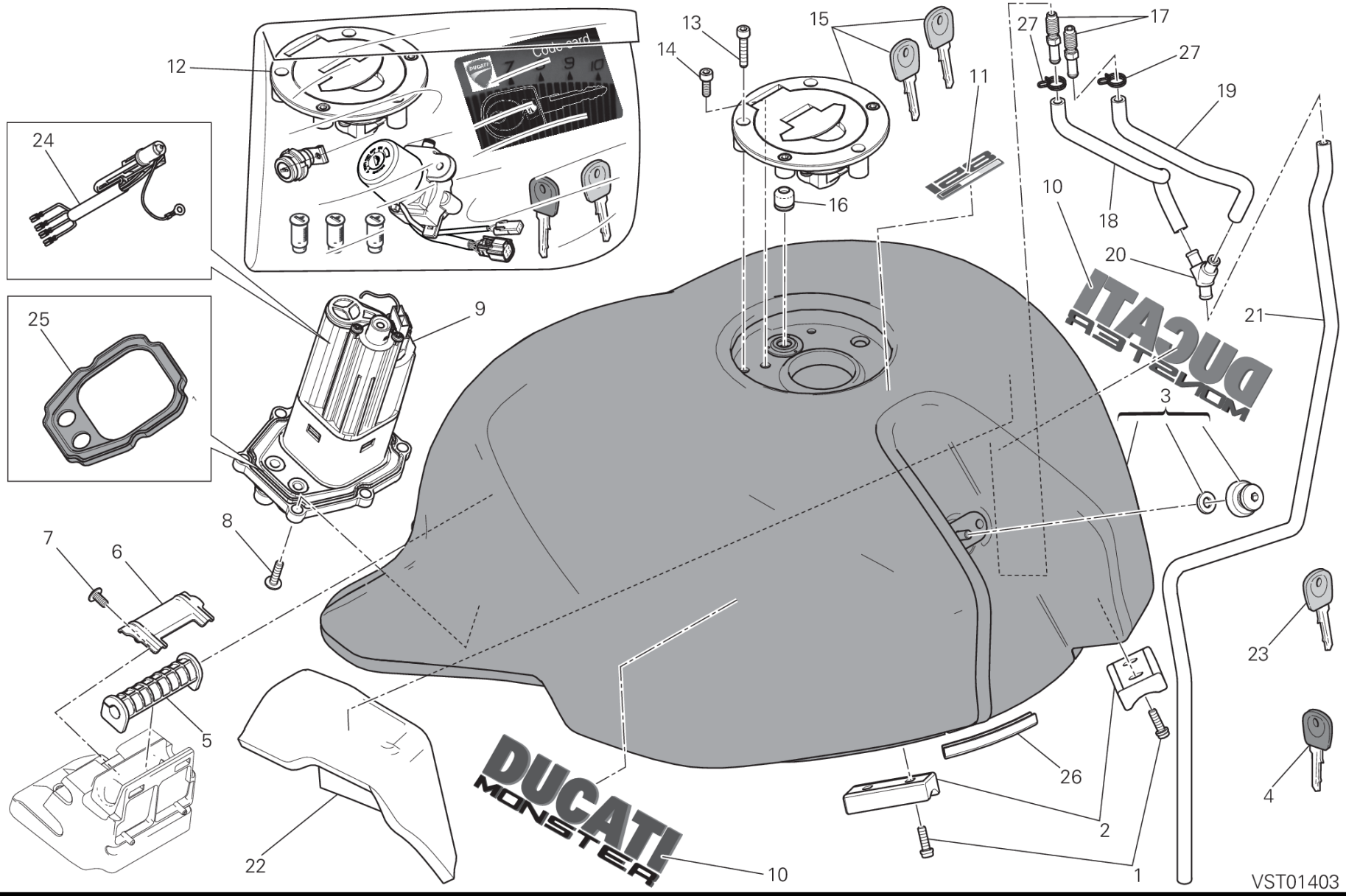
12
24
25
9
13
14
15
16
11
27
17
27
19
10
18
20
21
3
8
7
6
5
22
10
26
2
1
23
4
VST01403

DRAWING 032 - FUEL TANK [MOD:M 821;XST:AUS,EUR,FRA,JAP]

GROUP FRAME

POS.	CODE	DESCRIPTION	QTY	START DATE	END DATE	VALIDITY	NOTES
1	77156413B	SCREW TCEIF M5X16	4	01/03/2013			
2	86611721C	PAD, FUEL TANK	2	01/03/2013			
3	58612001CA	FUEL TANK RED	1	17/04/2014		MOD:M 821	
	58612001CW	FUEL TANK WHITE	1	17/04/2014		MOD:M 821	
4	59840361A	WRENCH WITH TRANSPONDER	1	04/04/2013			
5	70010811A	RUBBER PAD	1	25/06/2013			
6	82610351BA	PLATE	1	22/10/2013			
7	77244168B	SCREW	1	22/10/2013			
8	77244213B	SCREW	6	25/06/2013			
9	16024291A	FLANGE	1	25/06/2013			
10	43819291AA	EMBLEM DUCATI FOR RED	2	17/04/2014		MOD:M 821	
	43819291AW	EMBLEM DUCATI FOR WHITE	2	17/04/2014		MOD:M 821	
11	43819281AA	ITALIAN FLAG DECAL FOR RED	1	17/04/2014		MOD:M 821	
	43819281AW	ITALIAN FLAG DECAL FOR WHITE	1	17/04/2014		MOD:M 821	
12	59821061A	LOCKS KIT	1	01/08/2013			
13	77150457E	SCREW M5X25	3	22/10/2013			
14	77150408B	SCREW TCEI M5X14	1	22/10/2013			
15	89520072A	TANK CAP	1	04/04/2013			
16	79111111A	GASKET	1	25/06/2013			
17	81413251A	UNION	2	25/06/2013			
18	59017992A	BREATHER PIPE	1	05/06/2014			
19	59018002A	HOSE	1	05/06/2014			
20	61610021A	THREE-WAYS UNION	1	01/08/2013			
21	93410161A	HOSE, DRAIN	1	01/08/2013			
22	4601B901B	GUARD CONTROL UNIT	1	16/07/2013			
23	59840183A	WRENCH WITHOUT TRANSPONDER	1	04/04/2013			
24	55243191A	THERMISTOR	1				
25	69926951A	GASKET KIT	1				
26	76412061A	RUBBER SECTION	1	17/04/2014			
27	74140571A	CLAMP	2	05/05/2014			

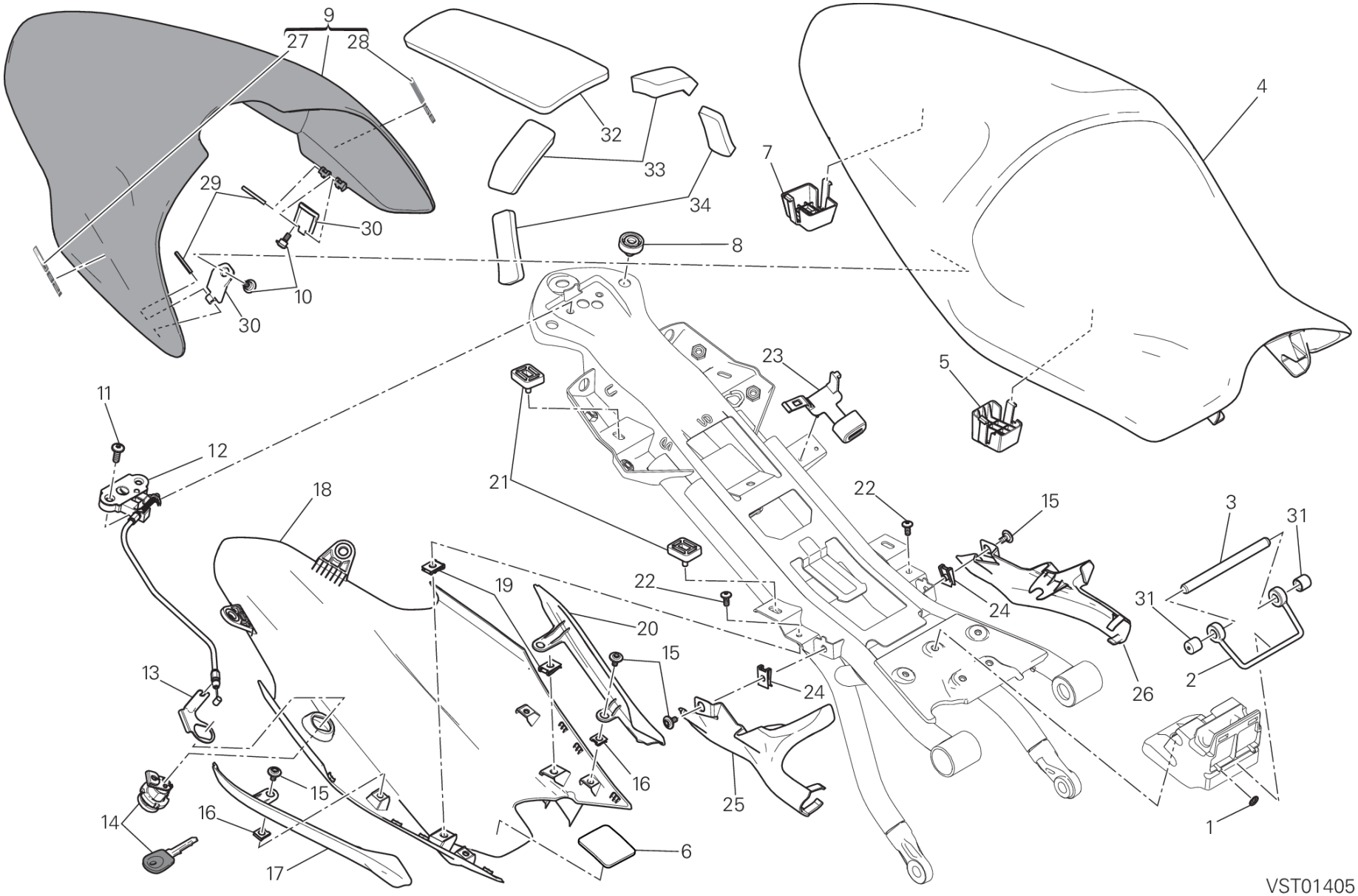
9
27
28
32
33
34
4
7
29
30
8
10
30
23
5
11
12
21
18
22
15
3
31
19
22
24
31
20
15
13
24
26
2
16
15
25
14
16
1
6
17
VST01405

DRAWING 033 - SEAT [MOD:M 821]

GROUP FRAME

POS.	CODE	DESCRIPTION	QTY	START DATE	END DATE	VALIDITY	NOTES
1	85040561A	WASHER, LOCK	2	01/08/2013			
2	86611751C	CUSHION, SEAT	1	01/08/2013			
3	82114711CA	PIN	1	01/08/2013			
4	59512401A	SEAT	1	05/05/2014			
5	8291C362A	SEAT SUPPORT Front	2	05/05/2014			
6	86611811A	PAD BLACKBOX UNIT	1	01/08/2013			
7	8291C372A	SEAT SUPPORT	2	05/05/2014			
8	76410631B	RUBBER PAD	2	25/11/2013			
9	595P2681AA	COVER SEAT RED (Unit)	1	05/05/2014			
	595P2681AB	COVER SEAT WHITE (Unit)	1	05/05/2014			
10	77210852A	SCREW TCEI M5X9	2	22/10/2013			
11	77240438C	SCREW TBEIF M6X18	2	01/08/2013			
12	59920101A	LOCK LATCH	1	01/08/2013			
13	83014401A	BRACKET, SEAT LOCK	1	01/08/2013			
14	59820572A	SEAT LOCK	1	04/04/2013			
15	77211251A	SCREW	8	22/10/2013			
16	85040471A	QUICK FASTENING M5	4	01/08/2013			
17	4601B241A	CAP RH	1	22/10/2013			
18	4601B223A	MUDFLAP BOTTOM	1	01/08/2013			
19	85040551A	QUICK FASTENING	2	01/08/2013			
20	4601B231A	CAP LH	1	22/10/2013			
21	86611701A	RUBBER PAD	4	01/08/2013			
22	77240263C	SCREW	2	01/08/2013			
23	74110401A	CLAMP	1	01/08/2013			
24	85041031A	NUT, SPRING M5	2	01/08/2013			
25	48211881A	COVER , FRAME RH	1	01/08/2013			
26	48211891A	COVER , FRAME LH	1	01/08/2013			
27	43511591A	RIGHT STICKER FOR RED	1	22/05/2014			
	43511611A	RIGHT STICKER FOR WHITE	1	22/05/2014			
28	43511581A	LEFT STICKER FOR RED	1	22/05/2014			
	43511601A	LEFT STICKER FOR WHITE	1	22/05/2014			
29	86150251A	PIN, SPRING	2	22/10/2013			
30	83016241A	BRACKET	2	22/10/2013			
31	87210901A	PLUG	2				
32	86611891A	CUSHION, SEAT UPPER	1	05/05/2014			

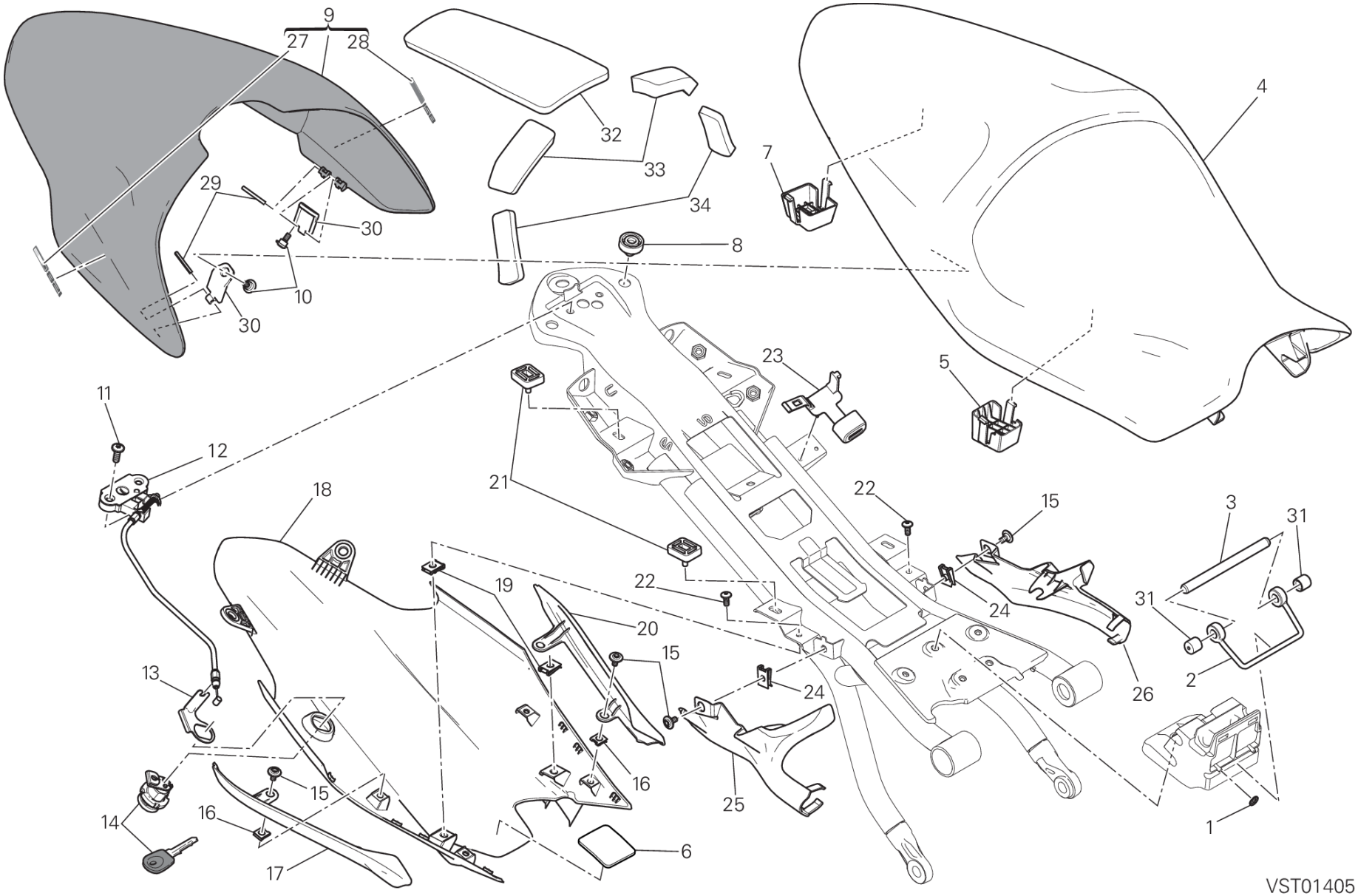
9
27
28
32
33
34
4
7
29
30
8
10
30
23
5
11
12
21
18
22
15
3
31
19
22
24
31
20
15
13
24
26
2
16
15
25
14
16
1
6
17
VST01405

POS.	CODE	DESCRIPTION	QTY	START DATE	END DATE	VALIDITY	NOTES
33	86611881A	CUSHION, SEAT MIDDLE	2	05/05/2014			
34	86611871A	CUSHION, SEAT LOWER	2	05/05/2014			

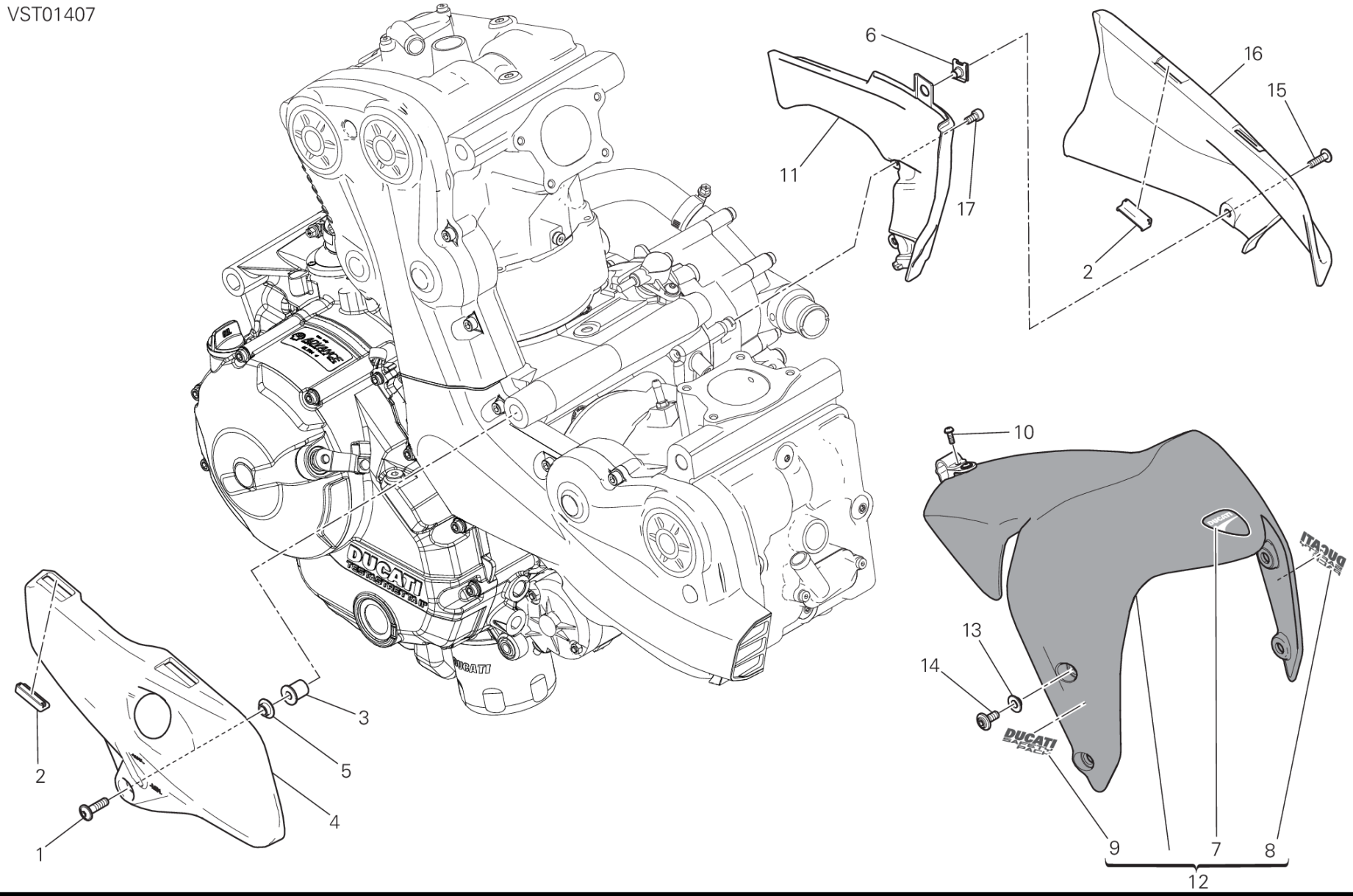
VST01407
6
11
17
16
15
2
10
13
14
9
7
8
12
3
5
4
1
2

DRAWING 034 - HALF FAIRING [MOD:M 821]

GROUP FRAME

POS.	CODE	DESCRIPTION	QTY	START DATE	END DATE	VALIDITY	NOTES
1	77240453C	SCREW TBEIF M6X22 10.9	1	22/10/2013			
2	76411881A	RUBBER PAD	4	22/10/2013			
3	85041121A	BUSH	1	22/10/2013			
4	48211861B	RIGHT COVER	1	22/10/2013			
5	71614811AA	SPACER	1	22/10/2013			
6	85040471A	QUICK FASTENING M5	1	01/10/2013			
7	43814741A	EMBLEM DUCATI	1	23/09/2013			
8	43713501A	DECAL DUCATI SAFETY PACK L.H.	1	23/09/2013			
9	43713511A	DECAL DUCATI SAFETY PACK R.H.	1	23/09/2013			
10	77440101A	SCREW, TAPPING 3.5X10	1	22/10/2013			
11	75810811A	COVER, WIRE HARNESS LEFT	1	22/10/2013			
12	564P1082AW	FRONT MUDGUARD ASSEMBLY WHITE	1	05/05/2014			
	564P1082BA	FRONT MUDGUARD ASSEMBLY RED	1	05/05/2014			
13	71614011B	SPACER 6.2X8.5X14	4	22/10/2013			
14	77210893B	SCREW	4	22/10/2013			
15	77240293C	SCREW	1	19/09/2013			
16	48211871A	LEFT COVER UPPER	1	22/10/2013			
17	77150388B	SCREW TCEI M5X10	2	22/10/2013			

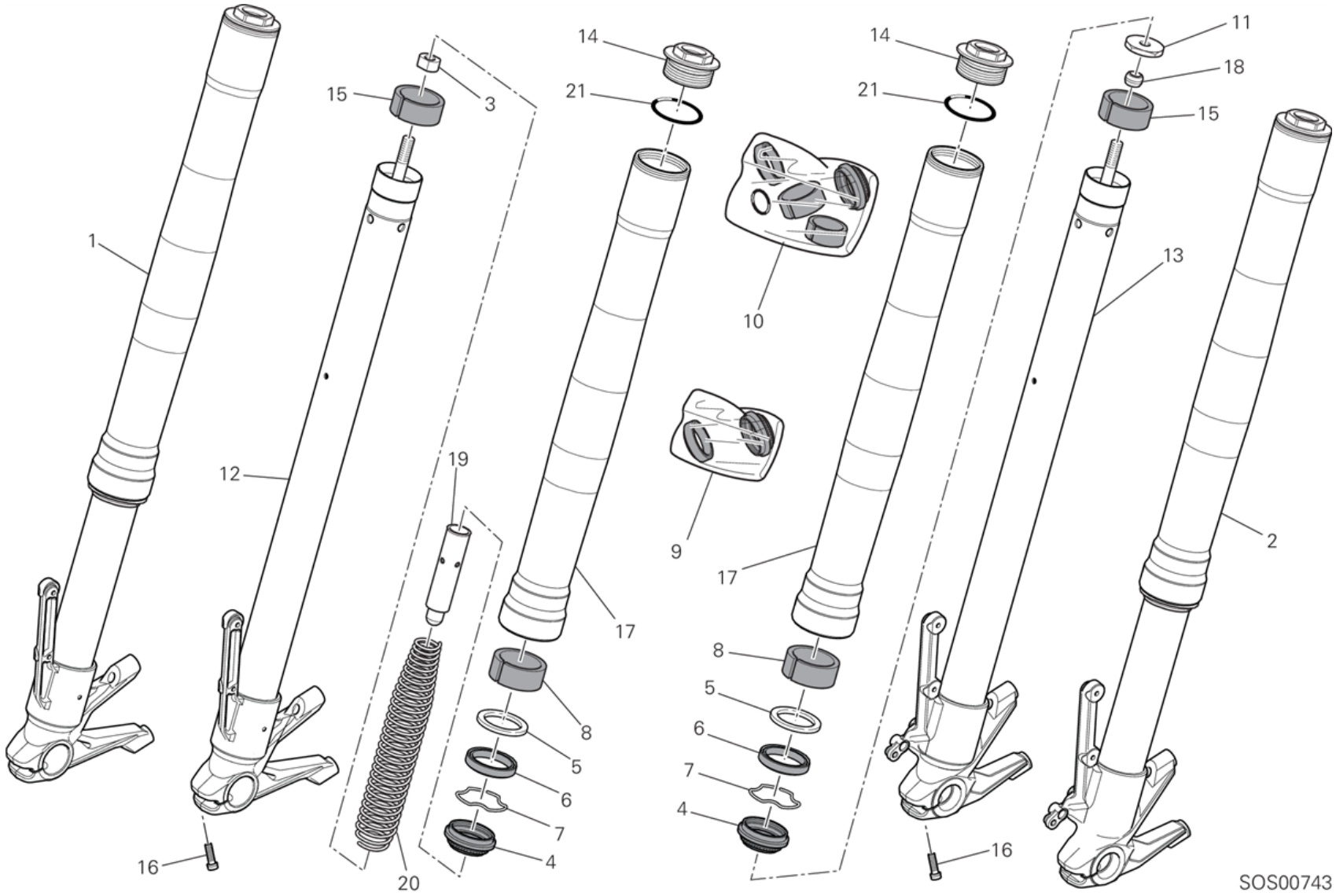
1
2
3
4
5
6
7
8
9
10
11
12
13
14
15
16
17
18
19
20
21
SOS00743

DRAWING 21A - FRONT FORK [MOD:M 821;XST:AUS,EUR,FRA,JAP]

GROUP FRAME

POS.	CODE	DESCRIPTION	QTY	START DATE	END DATE	VALIDITY	NOTES
1	34420571B	RIGHT FORK LEG ASSY	1	11/04/2014			
2	34520571B	LEFT FORK LEG ASSY	1	11/04/2014			
3	34913621A	NUT	1				
4	34913531A	DUST COVER	2				
5	34913561A	WASHER	2				
6	34913551A	SEAL RING	2				
7	34913541A	STOP RING	2				
8	34913571A	LOWER BUSH	2				
9	34921051A	SEAL KIT	2				
10	34921041A	OVERHAUL KIT	2				
11	34913991A	NUT, SPECIAL	1				
12	34921851A	FORK BOTTOM END + SLEEVE UNIT (R.H.)	1				
13	34921811A	FORK BOTTOM END + SLEEVE UNIT (L.H.)	1				
14	34913981A	CAP,FORK TOP	2				
15	34913581A	UPPER BUSHING	2				
16	77156693B	SCREW	4	25/11/2013			
17	34921831A	STANCHION TUBE	2				
18	34914001A	RUBBER PAD	1				
19	34914241A	PRELOAD TUBE	1				
20	34914281A	FORK SPRING	1				
21	34913671A	O-RING	2				

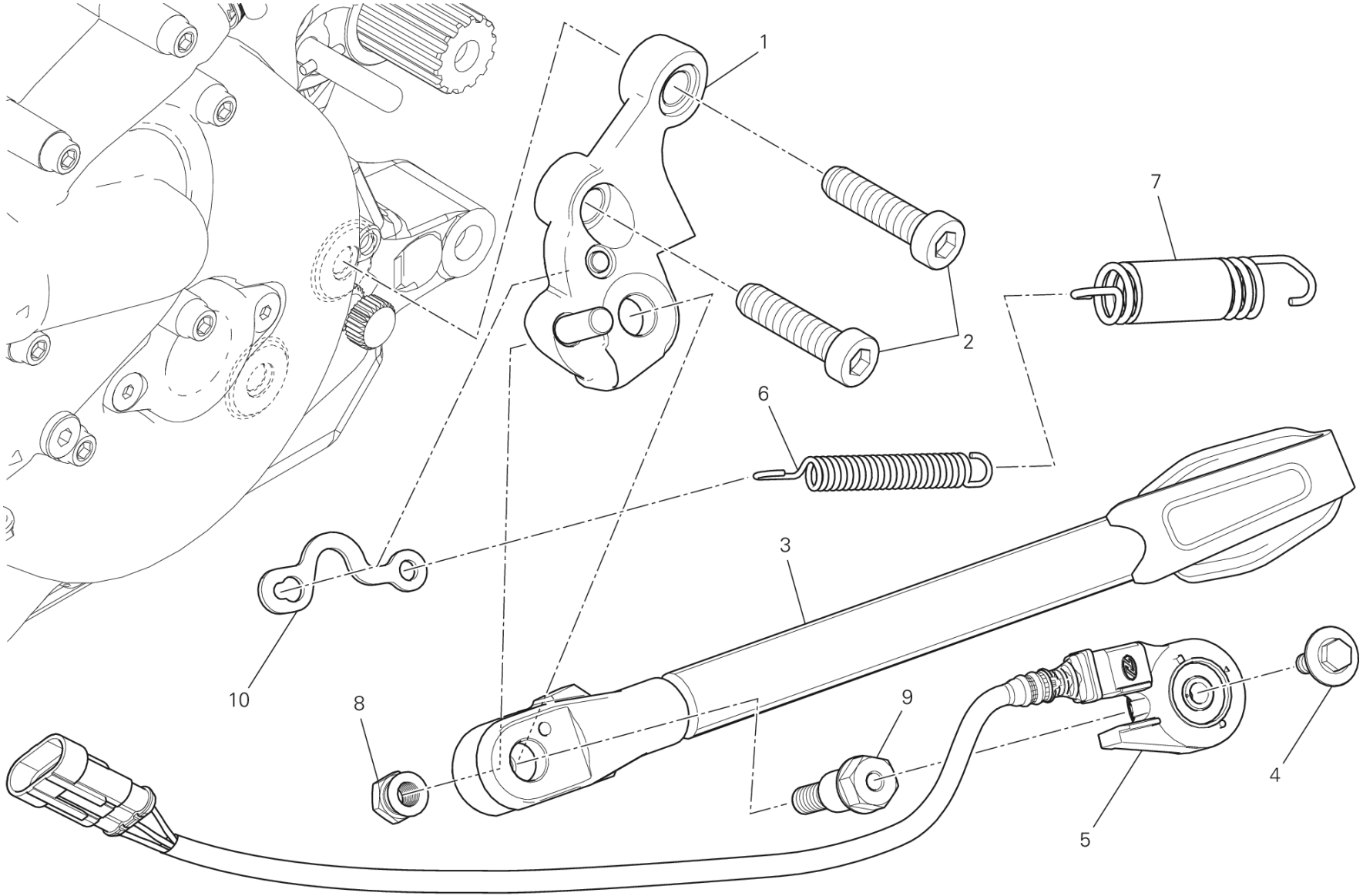

TFL00814

DRAWING 22A - SIDE STAND [MOD:M 821]

GROUP FRAME

POS.	CODE	DESCRIPTION	QTY	START DATE	END DATE	VALIDITY	NOTES
1	55610791C	BRACKET, SIDE STAND	1	02/10/2013			
2	77355213C	SCREW TCEIR M10X40 DIN6912 10.9	2	22/10/2013			
3	55610801C	SIDE STAND	1	02/10/2013			
4	77917241AA	SCREW	1	05/05/2014			
5	53910341A	SWITCH ASSY, SIDE STAND	1	10/01/2014			
6	79910891C	INNER SPRING	1	02/10/2013			
7	79920881C	COMPLETE SPRING	1	02/10/2013			
8	75010481A	NUT	1	02/10/2013			
9	82114611A	AXLE, SIDE STAND	1	02/10/2013			
10	82912602A	PLATE	1	02/10/2013			

BRB00482

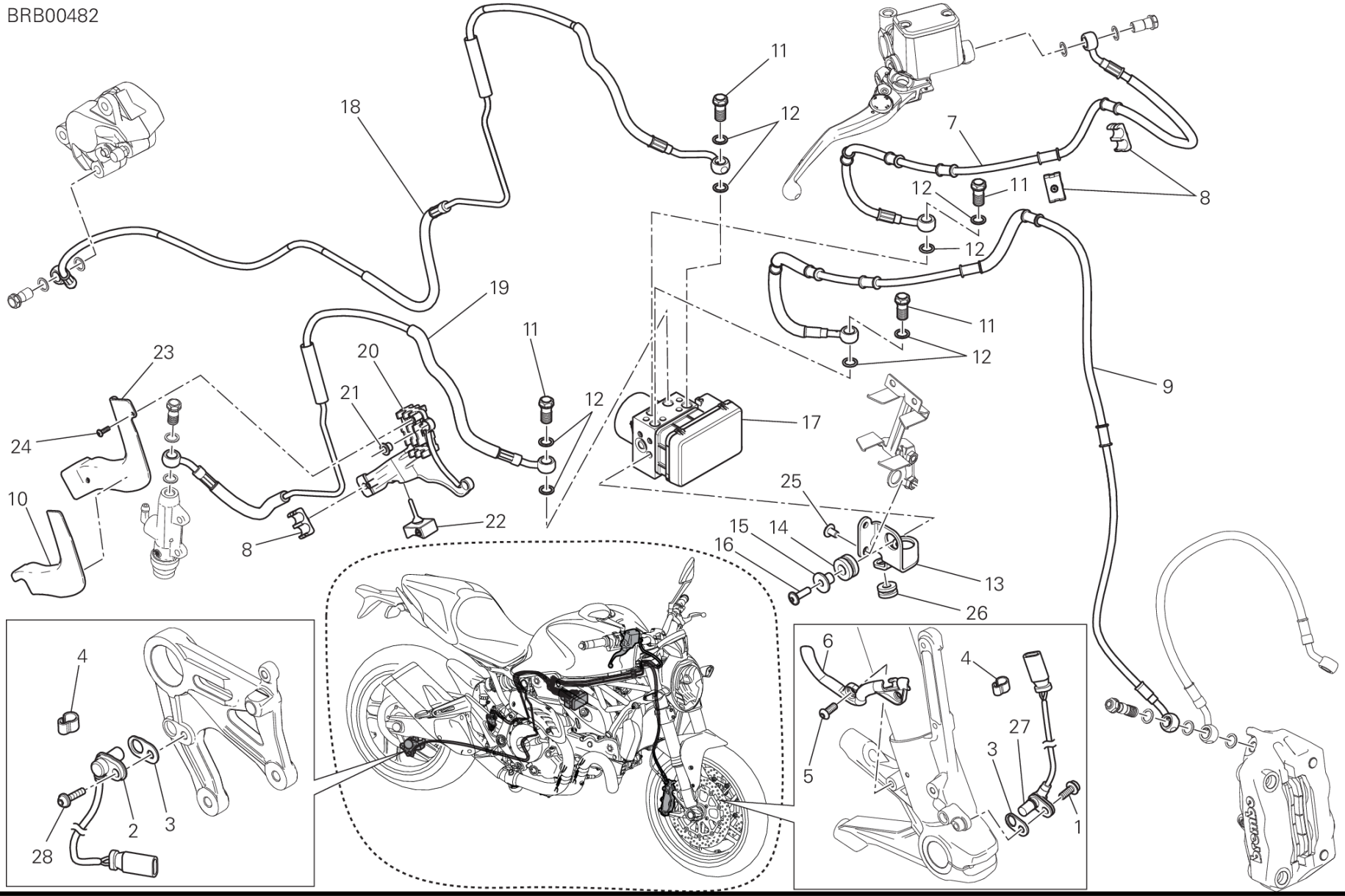
11
12
18
7
8
12
11
12
19
11
12
23
20
21
12
17
9
24
10
22
8
25
15
14
16
13
26
4
6
4
27
3
5
1
28
2
3

POS.	CODE	DESCRIPTION	QTY	START DATE	END DATE	VALIDITY	NOTES
1	77110401B	SCREW	1	22/10/2013			
2	55212121B	SENSOR, SPEED	1	01/08/2013			
3	71314901A	GASKET TH.02	4	22/10/2013			
	71319201A	GASKET 0.5 MM	6	22/10/2013			
4	75840601A	FAIRLEAD	10	22/10/2013			
5	77550213C	SCREW TBEI M6X16	2	01/08/2013			
6	75810642A	FAIRLEAD	1	01/08/2013			
7	61810541B	FRONT MASTER CYLINDER - CPU LINE	1	02/04/2014			
8	86611121A	RUBBER PAD	5	22/10/2013			
9	61810522B	CPU - FRONT CALIPERS LINE	1	20/09/2013			
10	4601A871A	HEAT GUARD	1	22/10/2013			
11	77913662AB	BOLT, BRAKE HOSE	4	20/09/2013			
12	85250241A	WASHER 10X14X1	8	20/09/2013			
13	83018181AA	BRACKET	1	22/10/2013			
14	76410641A	VIBRATION DAMPER PAD	2	22/10/2013			
15	71610031A	SPACER	2	22/10/2013			
16	77240443C	SCREW	2	22/10/2013			
17	54240451B	CONTROL UNIT ABS	1	20/01/2014			
18	61910651C	CPU - REAR CALIPER LINE	1	02/04/2014			
19	61910482B	REAR MASTER CYLINDER - CPU LINE	1	20/09/2013			
20	83018341B	BRACKET, BRAKE HOSE	1	22/10/2013			
21	71614581AA	SPACER	2	22/10/2013			
22	76411711A	RUBBER PAD	1	22/10/2013			
23	8291C141A	COVER	1	22/10/2013			
24	77440111A	SCREW	2	22/10/2013			
25	77211021A	SCREW TBEIF M6X10	2	22/10/2013			
26	76411141A	VIBRATION DAMPER PAD	1	22/10/2013			
27	55212111B	SENSOR, SPEED	1	22/10/2013			
28	77210423C	SCREW TBEIF M6X16	1	05/05/2014			

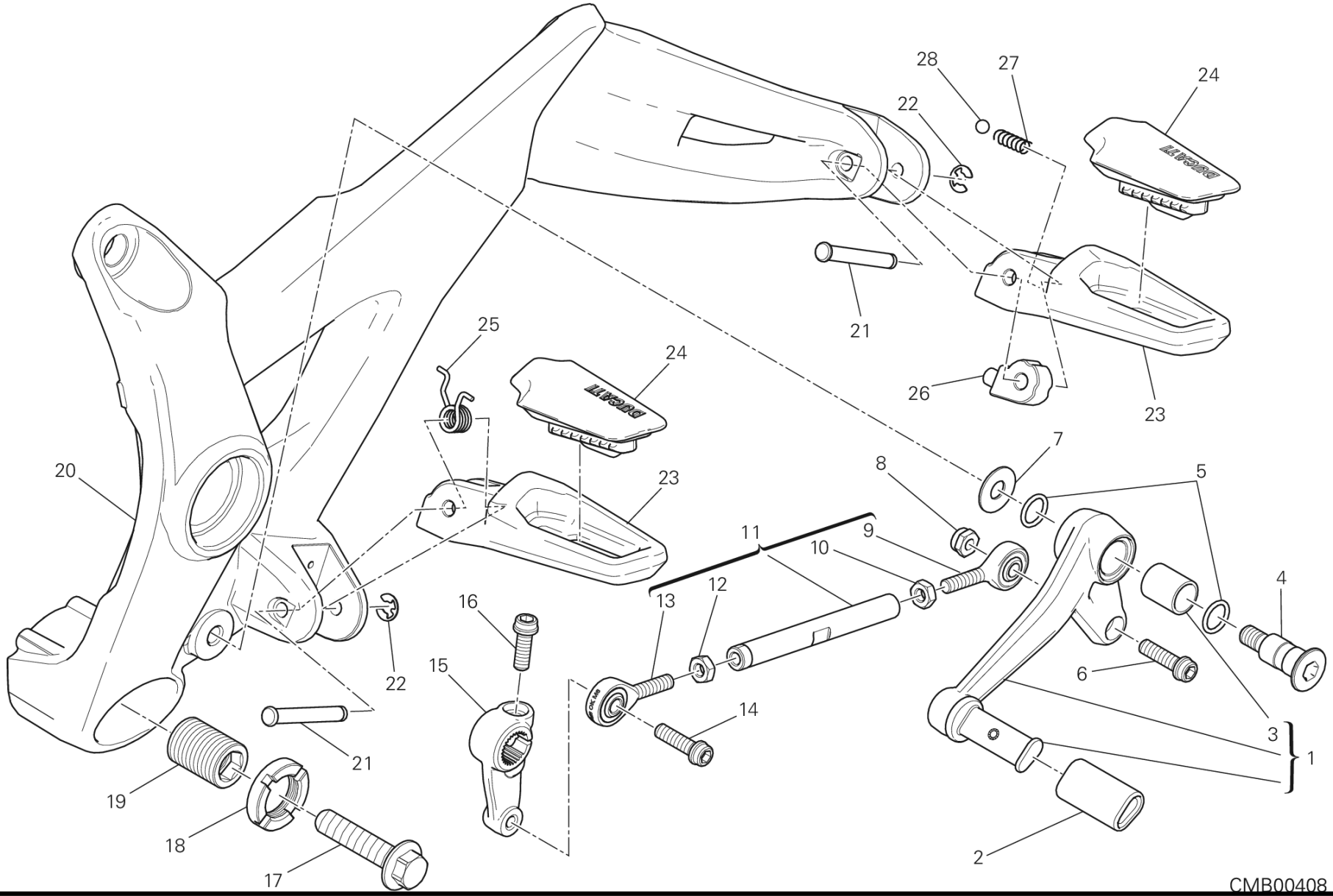
28
27
24
22
21
25
24
26
23
20
23
7
8
5
11
9
10
4
12
13
16
15
22
6
14
3
1
21
19
18
17
2
CMB00408

DRAWING 27A - FOOTRESTS, LEFT [MOD:M 821]

GROUP FRAME

POS.	CODE	DESCRIPTION	QTY	START DATE	END DATE	VALIDITY	NOTES
1	45622071CA	GEARCHANGE LEVER (Unit)	1	13/01/2014			
2	76410112A	COVER PEDAL	1				
3	71210341A	BUSH	1	01/03/2013			
4	82111701CA	PIN PEDAL	1	14/10/2013			
5	88641161A	O-RING	2	14/10/2013			
6	77156688B	SCREW TCEIF M6X22X18	1	14/10/2013			
7	85210532A	WASHER 8.2X20X1	1	14/10/2013			
8	74940041A	NUT, SELF-LOCKING M6	1	14/10/2013			
9	84850021A	BALL JOINT, RIGHT	1	14/10/2013			
10	74750101A	NUT 6MM	1	14/10/2013			
11	11721442AA	GEARBOX DRIVING ROD (Unit)	1	14/10/2013			
12	74750011AB	NUT, LEFT THREAD M6	1	14/10/2013			
13	84850011A	BALL JOINT, LEFT	1	14/10/2013			
14	77113691A	SCREW TCEIF M6X12	1	19/09/2013			
15	45612071AA	GEAR CONTROL LEVER GRAY	1	14/10/2013			
16	77110191A	SCREW TCEIF M6X20	1	30/01/2014			
17	77253988C	SCREW	1	22/10/2013			
18	70310512AA	RING NUT	1	14/10/2013			
19	77916411A	THREADED DOWEL	1	14/10/2013			
20	82412292AB	L.H. FOOT PEG HOLDER PLATE	1	14/10/2013			
21	82114642AA	FOOTREST PIN	2	14/10/2013			
22	88450031A	CIRCLIP E-TYPE	2	14/10/2013			
23	46410921CA	LEFT FOOTREST	2	14/10/2013			
24	76510081D	FOOT PEG RUBBER COVER L.H.	2	14/10/2013			
25	79914991A	SPRING. FOOTREST	1	14/10/2013			
26	69610131A	SPRING RETAINER	1	14/10/2013			
27	79910241A	SPRING	1	14/10/2013			
28	84740021A	BALL	1	14/10/2013			

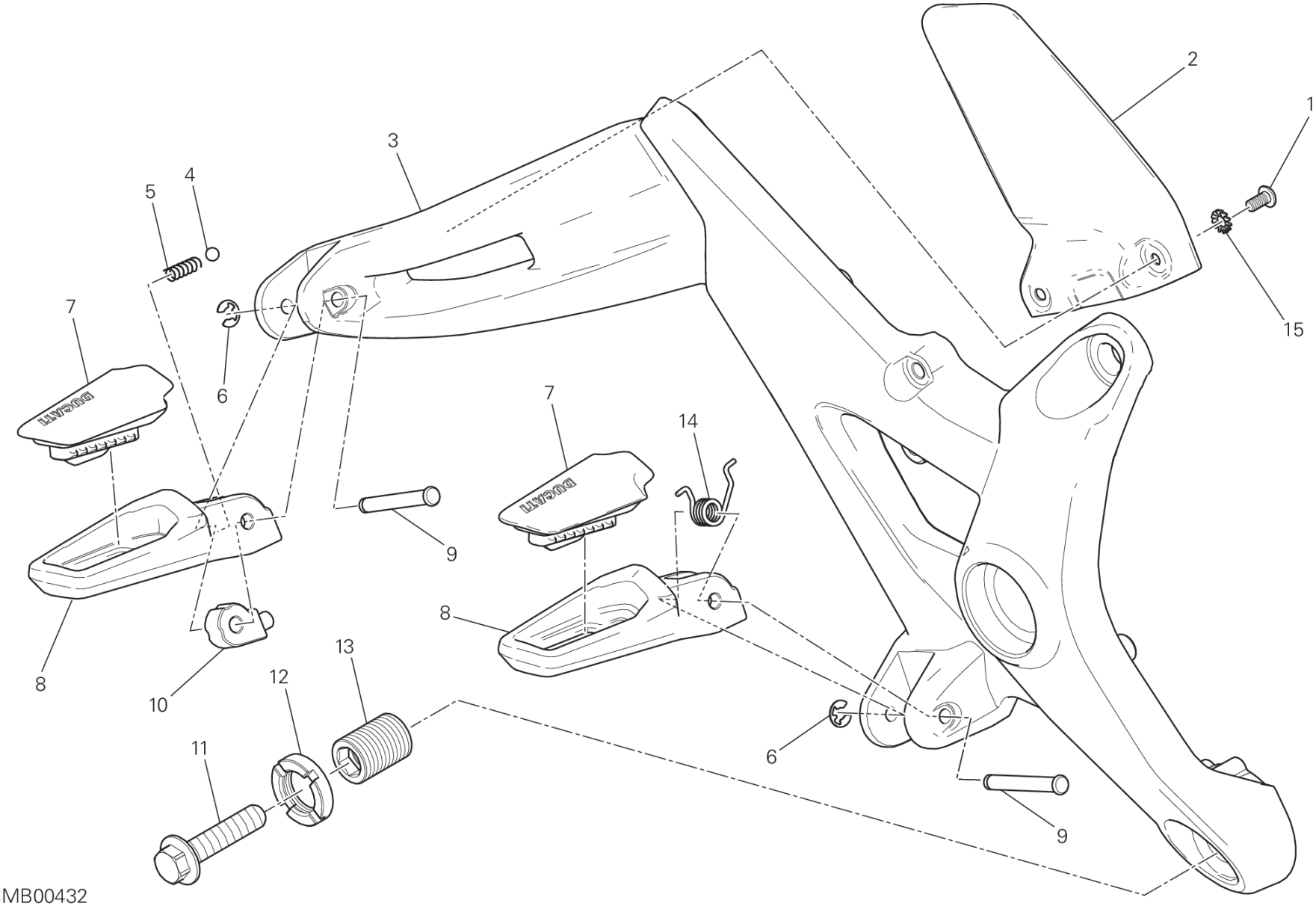
1
2
3
4
5
6
7
8
9
10
11
12
13
14
15
CMB00432

DRAWING 27B - FOOTRESTS, RIGHT [MOD:M 821]

GROUP FRAME

POS.	CODE	DESCRIPTION	QTY	START DATE	END DATE	VALIDITY	NOTES
1	77510511A	SCREW TBEI M5X10	2	05/05/2014			
2	4601C261A	HEEL GUARD R.H.	1	05/05/2014			
3	82412282BB	R.H. FOOT PEG HOLDER PLATE	1	19/09/2013			
4	84740021A	BALL	1	19/09/2013			
5	79910241A	SPRING	1	19/09/2013			
6	88450031A	CIRCLIP E-TYPE	2	19/09/2013			
7	76510071D	FOOT PEG RUBBER COVER R.H.	2	19/09/2013			
8	46410911CA	RIGHT FOOTREST	2	19/09/2013			
9	82114642AA	FOOTREST PIN	2	19/09/2013			
10	69610131A	SPRING RETAINER	1	19/09/2013			
11	77253988C	SCREW	1	22/10/2013			
12	70310512AA	RING NUT	1	19/09/2013			
13	77916411A	THREADED DOWEL	1	19/09/2013			
14	79914991A	SPRING. FOOTREST	1	19/09/2013			
15	46240461A	WASHER, SPRING	2	05/05/2014			

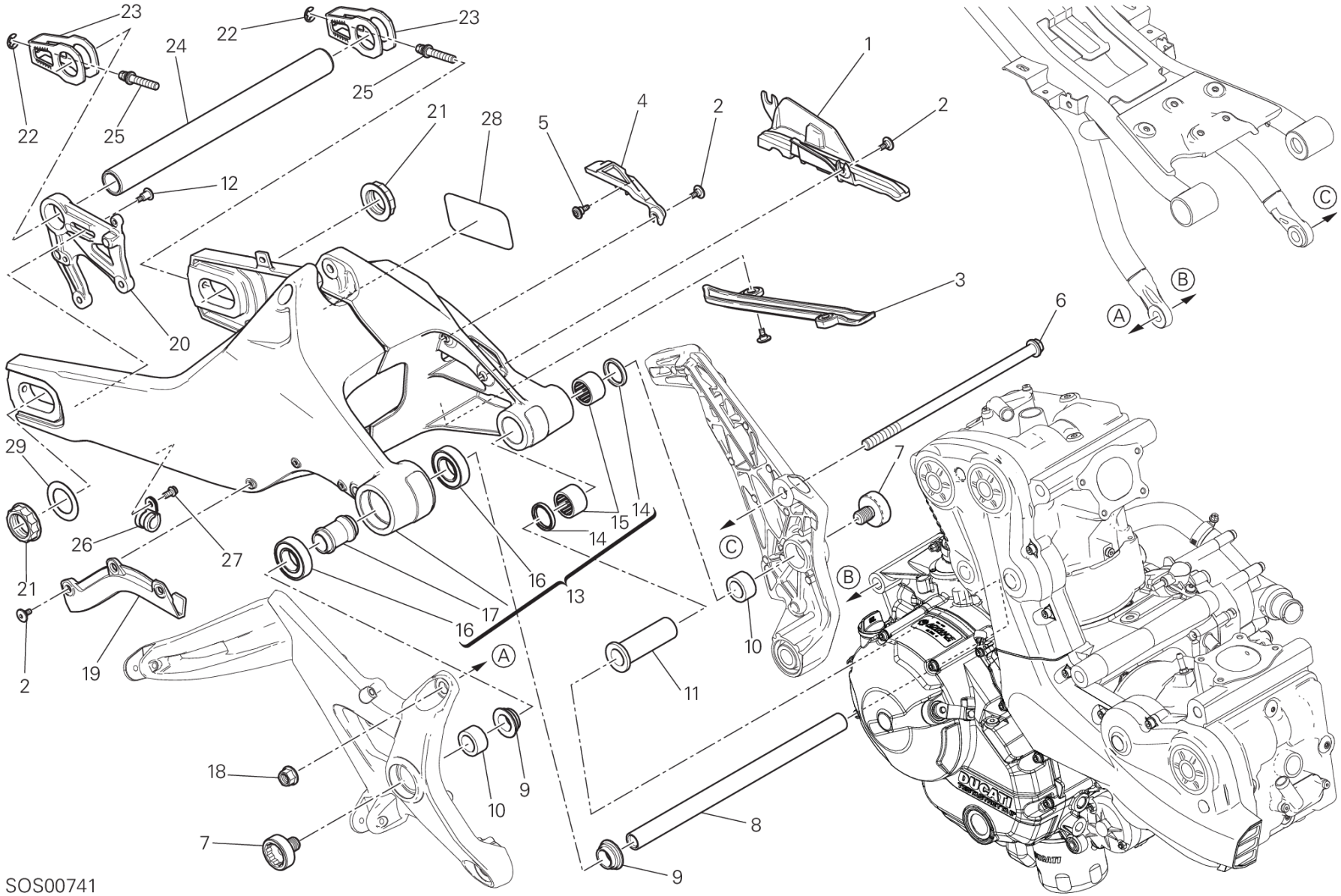
23
22
23
24
25
22
25
21
28
5
4
2
1
2
12
20
3
6
A
B
C
29
7
26
27
15
14
14
16
13
17
16
21
2
19
10
11
18
10
9
7
8
9
SOS00741

POS.	CODE	DESCRIPTION	QTY	START DATE	END DATE	VALIDITY	NOTES
1	44711251A	CHAIN SLIDER	1	21/05/2014			
2	77914871C	SCREW	7	01/08/2013			
3	44711211A	LOWER CHAIN SLIDING SHOE	1	21/05/2014			
4	44711201A	UPPER CHAIN SLIDING SHOE	1	21/05/2014			
5	77210841C	SCREW	1	21/05/2014			
6	77918431AA	SCREW, SPECIAL	1	22/10/2013			
7	77918421AB	SCREW, SPECIAL	2	22/10/2013			
8	36911341AA	AXLE, REAR SWING ARM	1	22/10/2013			
9	71210301A	RIGHT SPACER	2	22/10/2013			
10	71210491AA	SPACER	2	22/10/2013			
11	71011891A	BUSHING	1	01/08/2013			
12	77214221AA	SCREW, SPECIAL	1	21/05/2014			
13	37021581AA	COMPLETE SWINGARM	1	15/07/2014			
14	93050121A	SEAL RING	2	01/08/2013			
15	70140171A	BEARING, NEEDLE	2	01/08/2013			
16	70250451A	BEARING	2	01/08/2013			
17	7131A211AA	INNER SPACER	1	01/08/2013			
18	74841011AA	NUT	1	05/05/2014			
19	4601C401A	COVER, FR BRAKE PIPE	1	05/05/2014			
20	82510501AA	CALIPER HOLDER BRACKET	1	21/05/2014			
21	75011891AA	NUT	2	05/05/2014			
22	88450341B	SPRING RING	2	10/12/2013			
23	37310881AA	PULLER, CHAIN	2	10/12/2013			
24	81910742AA	REAR WHEEL SPINDLE	1	05/05/2014			
25	77919021AA	SCREW	2	10/12/2013			
26	74142241A	CLAMP	1	05/05/2014			
27	77210501C	SCREW TEF M6X12	1	05/05/2014			
28	43314011A	CHAIN ADJUSTMENT STICKER	1	05/05/2014		XST:AUS,EUR,FRA	(EU - USA)
	43314011B	CHAIN ADJUSTMENT STICKER	1	05/05/2014		XST:JAP	(JAP)
29	71313882A	WASHER, THRUST	1	05/05/2014			

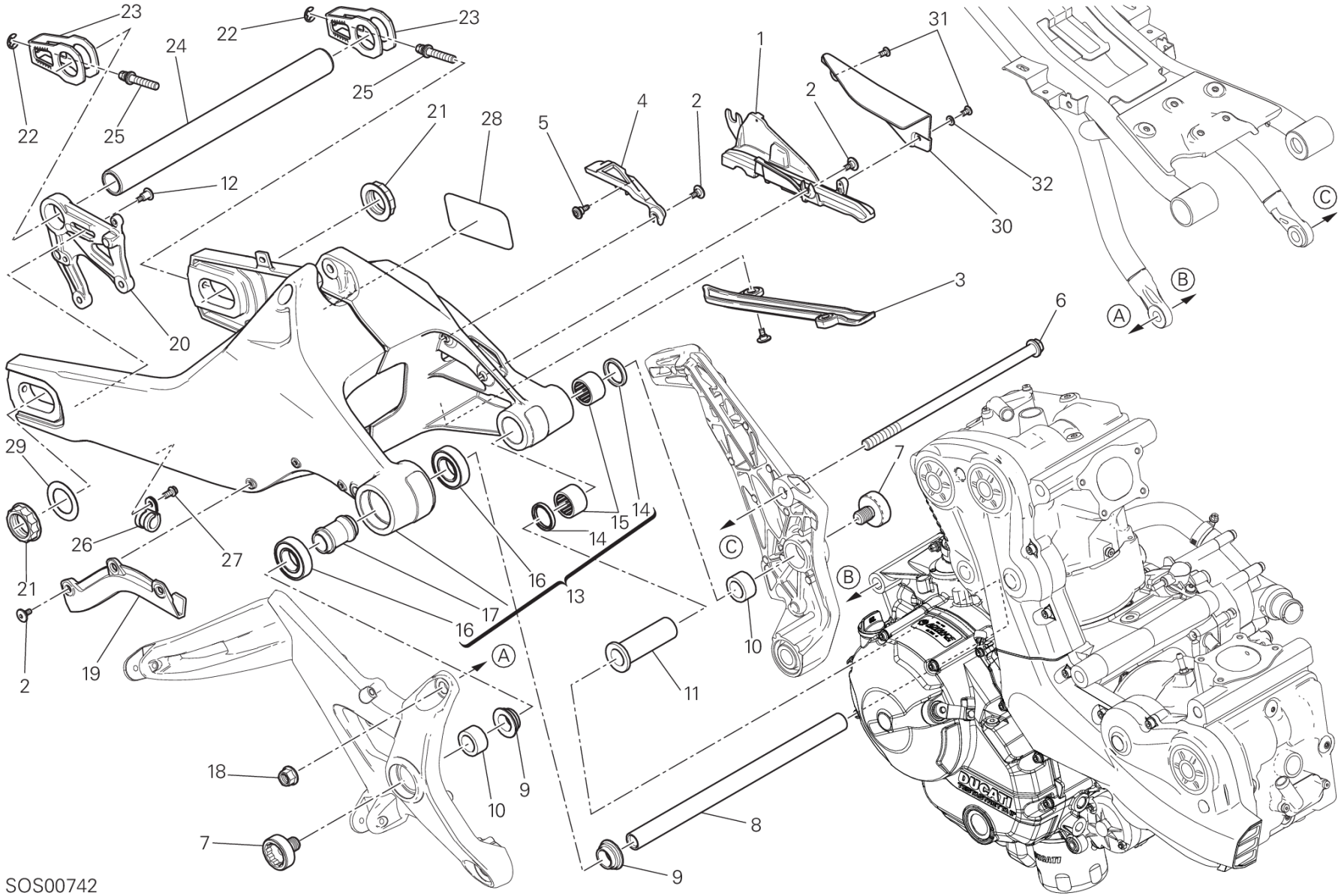
23
22
23
24
25
22
25
21
28
5
4
2
1
2
31
32
30
12
20
3
6
A
B
C
29
26
27
21
2
19
16
17
16
13
14
15
14
7
10
11
18
10
9
7
8
9
SOS00742

POS.	CODE	DESCRIPTION	QTY	START DATE	END DATE	VALIDITY	NOTES
1	44711301A	CHAIN SLIDER	1	21/05/2014			
2	77914871C	SCREW	7	01/08/2013			
3	44711211A	LOWER CHAIN SLIDING SHOE	1	21/05/2014			
4	44711201A	UPPER CHAIN SLIDING SHOE	1	21/05/2014			
5	77210841C	SCREW	1	21/05/2014			
6	77918431AA	SCREW, SPECIAL	1	22/10/2013			
7	77918421AB	SCREW, SPECIAL	2	22/10/2013			
8	36911341AA	AXLE, REAR SWING ARM	1	22/10/2013			
9	71210301A	RIGHT SPACER	2	22/10/2013			
10	71210491AA	SPACER	2	22/10/2013			
11	71011891A	BUSHING	1	01/08/2013			
12	77214221AA	SCREW, SPECIAL	1	21/05/2014			
13	37021581AA	COMPLETE SWINGARM	1	15/07/2014			
14	93050121A	SEAL RING	2	01/08/2013			
15	70140171A	BEARING, NEEDLE	2	01/08/2013			
16	70250451A	BEARING	2	01/08/2013			
17	7131A211AA	INNER SPACER	1	01/08/2013			
18	74841011AA	NUT	1	05/05/2014			
19	4601C401A	COVER, FR BRAKE PIPE	1	05/05/2014			
20	82510501AA	CALIPER HOLDER BRACKET	1	21/05/2014			
21	75011891AA	NUT	2	05/05/2014			
22	88450341B	SPRING RING	2	10/12/2013			
23	37310881AA	PULLER, CHAIN	2	10/12/2013			
24	81910742AA	REAR WHEEL SPINDLE	1	05/05/2014			
25	77919021AA	SCREW	2	10/12/2013			
26	74142241A	CLAMP	1	05/05/2014			
27	77210501C	SCREW TEF M6X12	1	05/05/2014			
28	43314011A	CHAIN ADJUSTMENT STICKER	1	05/05/2014		XST:AUS,EUR,FRA	(EU - USA)
	43314011B	CHAIN ADJUSTMENT STICKER	1	05/05/2014		XST:JAP	(JAP)
29	71313882A	WASHER, THRUST	1	05/05/2014			
30	44711311A	GUARD	1	21/05/2014			
31	77440171A	SCREW	2	25/05/2014			
32	85213741AA	WASHER	1	25/05/2014			

CODE	NO. TABLE	POS.
027291090	002	8
061950065	012	17
066013143	002	9
066549680	005	8
067016145	003	7
067016155	003	19
069191030	18B	12
11210791AA	10A	10
11210791AB	10A	10
11210791AC	10A	10
11210791AD	10A	10
11210791AE	10A	10
11210801AA	006	8
11210801AB	006	8
11721442AA	27A	11
11723531AA	025	15
12021942BA	007	5
12021952AA	007	10
12111741B	007	2
12112921C	007	3
12120531B	007	4
12221876A	007	1
13510401A	017	20
14010762B	017	1
14621982AA	006	1
14621982AB	006	1
14621982AC	006	1
14710811A	008	3
14710951B	010	3
14720921D	005	20
14824222A	013	15
14824232A	013	11
14824242A	013	14
14824252A	013	18
14911101A	003	2
14911111B	003	25
15021821A	003	26
15021831B	003	16
15620821AA	006	5
15620821AB	006	5
15620821AC	006	5
16010571A	012	13
16010922A	026	24
16010941A	013	10

CODE	NO. TABLE	POS.
16024291A	032	9
17010511A	006	6
17122271A	008	13
17210021B	003	10
17210081C	003	22
17210103C	003	20
17210113C	003	23
17212182A	003	18
17212192A	003	24
17214591A	003	8
17214601A	003	5
17214611A	003	9
17214621A	003	21
17310291A	012	14
17410621B	009	1
17420591A	010	4
176Z0021A	012	10
18020261A	002	6
180Z0031A	002	11
180Z0041A	002	12
182Z0042A	002	18
18410051A	025	14
18710021A	024	2
19020312A	004	9
19410581A	004	4
19420573B	004	5
19610601B	004	12
19610611A	004	10
19810331A	004	14
20810321A	014	3
20810321A	015	3
20910491A	014	16
20910491A	015	16
20910501A	014	4
20910501A	015	4
21010991A	014	14
21010991A	015	14
21110991A	014	5
21110991A	015	5
22032083A	010	5
225Z0071B	010	1
24221181AB	011	13
24321391AC	005	1
24511421A	008	1

CODE	NO. TABLE	POS.
24511431A	008	2
24521071A	008	21
24612162A	029	16
24713331A	28B	5
24713331A	28B	5
24713571AH	011	23
24714141AC	013	5
24714151AC	013	6
24714171A	013	24
24714481A	011	31
24714641A	018	11
24714651A	018	41
24714782A	20A	6
24715041A	021	39
24715051A	021	38
24724612A	010	7
25120131A	011	29
25440012A	005	4
25510104B	008	18
25510193A	013	7
26420501A	011	1
27040127A	012	1
276Z0021A	012	16
28040411A	017	24
28240932A	017	26
28620441A	01B	6
28642531A	18A	14
28642531E	18A	14
28642531F	18A	14
28642551A	18A	14
28642561A	18A	14
30123711AC	015	22
30123721AC	014	22
30310631BB	014	7
30310631BB	015	7
30310631BC	014	7
30310631BC	015	7
30310631BD	014	7
30310631BD	015	7
30411001AB	014	13
30411001AB	015	13
30411001AC	014	13
30411001AC	015	13
30411011AB	014	10

CODE	NO. TABLE	POS.
30411011AB	015	10
30411011AC	014	10
30411011AC	015	10
34110992AC	021	25
342P0781BC	021	35
34420571B	21A	1
34520571B	21A	2
34913531A	21A	4
34913541A	21A	7
34913551A	21A	6
34913561A	21A	5
34913571A	21A	8
34913581A	21A	15
34913621A	21A	3
34913671A	21A	21
34913981A	21A	14
34913991A	21A	11
34914001A	21A	18
34914241A	21A	19
34914281A	21A	20
34921041A	21A	10
34921051A	21A	9
34921811A	21A	13
34921831A	21A	17
34921851A	21A	12
36011551D	021	20
36015332AB	021	19
36015352AB	021	22
36110131C	021	36
36521332A	028	5
36911341AA	28A	8
36911341AA	28A	8
37021581AA	28A	13
37021581AA	28A	13
37310881AA	28A	23
37310881AA	28A	23
38010151A	022	15
38510351C	027	11
38940191A	18B	5
38940201A	18B	5
38940211A	18B	5
38940221A	18B	5
38940231A	018	40
38940241A	18B	5

CODE	NO. TABLE	POS.
38940251A	18B	5
38940261A	18B	5
38940301A	18B	5
39040162A	28B	11
39040162A	28B	11
39040211A	020	13
39040211A	28B	13
39040211A	28B	13
39040291A	020	22
39040311A	020	21
39110033A	28B	10
39110033A	28B	10
39520132C	018	14
39740081B	018	39
40611051E	20A	1
42020008A	025	27
42610191A	029	17
43314011A	28A	28
43314011A	28A	28
43314011B	28A	28
43314011B	28A	28
43511581A	033	28
43511591A	033	27
43511601A	033	28
43511611A	033	27
43713501A	034	8
43713511A	034	9
43814741A	034	7
43819281AA	032	11
43819281AW	032	11
43819291AA	032	10
43819291AW	032	10
44212781B	029	11
44212791D	029	13
44440035A	009	7
44711201A	28A	4
44711201A	28A	4
44711211A	28A	3
44711211A	28A	3
44711251A	28A	1
44711301A	28A	1
44711311A	28A	30
44910681A	003	12
45110182A	008	9

CODE	NO. TABLE	POS.
45110461A	008	4
45110491A	008	10
45120241A	008	23
45520181A	010	8
45612071AA	27A	15
45622071CA	27A	1
45720571AA	025	20
46016391A	026	35
4601A612A	018	23
4601A621B	018	3
4601A871A	24A	10
4601A883A	021	9
4601B223A	033	18
4601B231A	033	20
4601B241A	033	17
4601B274A	019	36
4601B284A	019	3
4601B881A	019	37
4601B901B	032	22
4601B921A	019	24
4601C051A	28B	27
4601C251A	019	17
4601C261A	27B	2
4601C401A	28A	19
4601C401A	28A	19
4602B331A	019	38
46210021A	021	2
46240461A	017	32
46240461A	18A	16
46240461A	27B	15
46320222A	010	10
46320537A	003	14
46410911CA	27B	8
46410921CA	27A	23
47017241BA	022	2
47017241BG	022	2
47017251DA	027	7
48016171B	030	20
48016242B	030	17
48016351A	18A	27
48016471A	030	12
48016481A	030	4
48211861B	034	4
48211871A	034	16

CODE	NO. TABLE	POS.
48211881A	033	25
48211891A	033	26
48211951A	022	17
49240032A	026	19
49241011A	026	5
49411651AA	026	34
49720041A	026	3
50121761AA	026	10
50121761AB	026	10
50221611AA	026	7
50221671AA	026	7
50410051A	026	20
50410061A	026	15
51019721A	18B	4
51019741B	18B	1
51019761B	18B	3
51019771C	18B	2
5101A081B	017	25
51310281B	018	43
51410711A	018	44
51410721B	018	36
51640011AB	18A	32
52010271C	020	23
52310441A	021	3
52310451A	021	7
52510482B	027	1
52910061A	28B	21
52910061A	28B	21
53010226A	28B	17
53010226A	28B	17
53010226B	020	18
53010236A	28B	14
53010236A	28B	14
53010236B	020	14
53910211B	10A	17
53910341A	22A	5
53940021B	023	9
53940031C	025	26
53940302A	016	5
53940721A	024	17
53940731A	023	8
54040321A	018	5
54140101A	18B	7
54240451B	24A	17

CODE	NO. TABLE	POS.
54841032A	030	19
55040271A	030	1
55040281A	030	2
55212111B	24A	27
55212121B	24A	2
55214011A	019	27
55240121A	020	4
55240121A	18A	8
55240131A	031	6
55241321B	10A	14
55241441A	017	18
55243191A	032	24
55340041A	031	13
55610791C	22A	1
55610801C	22A	3
56110261A	28B	22
56110261A	28B	22
56113191A	28B	25
56113191A	28B	25
56113201C	28B	3
56113201C	28B	3
564P1082AW	034	12
564P1082BA	034	12
56510761A	028	1
57013382A	019	29
57113251A	019	6
57113261A	019	1
57211632A	019	32
57322031AA	019	12
57322212AA	019	12
58510822B	031	22
58540081A	025	6
58612001CA	032	3
58612001CW	032	3
59014101A	017	31
59014111A	017	17
59014471A	029	20
59017992A	032	18
59018002A	032	19
59024001C	017	22
59310601B	010	11
59320581B	010	9
59340393A	019	20
59512401A	033	4

CODE	NO. TABLE	POS.
595P2681AA	033	9
595P2681AB	033	9
59820572A	033	14
59821061A	032	12
59840183A	032	23
59840361A	032	4
59920101A	033	12
61041291C	024	5
61041301C	024	8
61140421A	025	1
61240052A	024	1
61240081A	025	31
61240161A	025	29
61240511A	024	14
61340951A	025	28
61341021A	024	13
61610021A	032	20
61810511A	024	7
61810522B	24A	9
61810541B	24A	7
61910482B	24A	19
61910651C	24A	18
62440971A	024	11
62540201A	025	10
62640601A	024	19
62640901A	024	12
62640911A	023	11
63140161A	025	30
63140511A	024	18
63620031B	023	1
63640011B	023	3
65010121E	021	5
65110141A	021	16
65240231A	021	14
65540091A	029	8
66020051F	021	4
66810014A	011	16
66810024A	011	20
66810481A	007	14
66910011E	014	6
66910011E	015	6
67040451A	022	6
67110591A	022	9
67110601A	022	5

CODE	NO. TABLE	POS.
67620901A	026	26
67640941A	026	30
67740201A	026	27
68010131A	006	10
68010131A	008	16
68050061A	013	12
68050101A	010	17
69610131A	27A	26
69610131A	27B	10
69720291B	027	8
69926951A	032	25
70010361A	010	18
70010431A	18A	17
70010481B	020	24
70010541A	021	24
70010591A	026	22
70010811A	032	5
70010901A	017	33
70140031A	012	15
70140051A	003	4
70140171A	28A	15
70140171A	28A	15
70140411A	012	11
70140431A	005	18
70240091A	011	11
70240102A	011	9
70240131D	010	19
70240331A	010	20
70240381A	026	25
70240581A	008	27
70241231A	021	31
70250081A	010	21
70250081A	011	4
70250193A	010	22
70250451A	28A	16
70250451A	28A	16
70250621A	026	8
70250681A	026	12
70310481A	029	15
70310512AA	27A	18
70310512AA	27B	12
70310761AA	021	29
70350022A	013	2
70350062A	008	12

CODE	NO. TABLE	POS.
70450091A	009	8
70450091A	010	23
71011891A	28A	11
71011891A	28A	11
71110922A	011	33
71110951A	010	6
71111601A	005	13
71111601A	011	14
71112191A	007	12
71113741A	013	19
71210301A	28A	9
71210301A	28A	9
71210341A	025	21
71210341A	27A	3
71210491AA	28A	10
71210491AA	28A	10
71310141E	003	11
71311281B	011	27
71311841A	026	28
71311961A	026	17
71311973A	026	2
71312051A	026	21
71312661A	003	15
71312921A	014	9
71312921A	015	9
71312921B	014	25
71312921B	015	26
71313041A	030	15
71313751C	004	6
71313882A	28A	29
71313882A	28A	29
71314361AB	019	8
71314703A	28B	15
71314703A	28B	15
71314901A	24A	3
71319151A	002	2
71319191A	012	9
71319201A	24A	3
71319241A	28B	12
71319241A	28B	12
71319951A	003	1
7131A211AA	28A	17
7131A211AA	28A	17
7131A361AA	026	32

CODE	NO. TABLE	POS.
7131A371AA	026	31
7131A481A	020	12
7131A771AA	28B	28
71410941A	026	9
71411041AA	026	13
71610031A	24A	15
71610061A	18A	2
71610111AA	018	47
71610381B	018	10
71610722A	008	20
71611071B	017	13
71611281A	008	17
71611521A	20A	4
71614011B	034	13
71614071A	018	7
71614251A	020	19
71614271A	018	31
71614511AA	022	11
71614581AA	24A	21
71614601AA	019	14
71614691AA	019	5
71614731AA	018	4
71614811AA	034	5
72010513C	026	4
720941616	010	24
73210441F	019	34
73210452B	023	6
735033380	010	26
735033380	011	17
735033804	008	26
73740311A	008	5
74110101A	18B	14
74110131A	18B	17
74110401A	033	23
74110551A	18B	15
74113321A	008	24
74113331AA	005	6
74140011A	031	9
74140381A	18B	13
74140431A	017	11
74140431A	025	9
74140431A	031	18
74140571A	032	27
74140641A	031	29

CODE	NO. TABLE	POS.
74140651A	029	19
74141461A	019	10
74141681A	019	23
74141711A	017	15
74141711A	031	20
74141871A	017	3
74141901A	031	15
74141921A	007	7
74141921A	029	1
74141921A	031	4
74142121A	031	10
74142181A	031	28
74142241A	28A	26
74142241A	28A	26
74142371A	029	3
74142381A	019	2
74142401A	029	5
74710151A	010	25
74750011AB	27A	12
74750051B	025	13
74750071A	021	34
74750101A	27A	10
74810241A	019	28
74810351B	022	14
74810461A	026	33
74810501A	10A	4
74810651A	026	1
74840241AB	021	27
74840261C	017	12
74841011AA	28A	18
74841011AA	28A	18
74841021A	023	7
74850061A	18A	15
74940041A	27A	8
74940081A	008	7
74941113B	031	7
74941333B	018	19
74950011B	28B	18
74950011B	28B	18
75010071A	003	3
75010071E	004	7
75010121D	006	11
75010481A	22A	8
75011491AB	021	8

CODE	NO. TABLE	POS.
75011601A	008	15
75011611A	006	13
75011891AA	28A	21
75011891AA	28A	21
75050011B	020	1
75050051A	012	3
757941542	010	27
75810642A	24A	6
75810782A	18A	19
75810811A	034	11
75840601A	24A	4
75840641A	017	4
75840721A	017	6
75840771A	018	12
75840771A	027	2
75910301B	021	12
75910311A	027	9
764020002	003	17
76410011A	019	9
76410112A	27A	2
76410221A	022	12
76410221A	030	7
76410221A	18A	3
76410621B	018	45
76410631B	033	8
76410641A	020	7
76410641A	24A	14
76410841A	20A	2
76410871A	014	8
76410871A	015	8
76410901A	28B	7
76410901A	28B	7
76410971A	020	3
76410981A	031	26
76411141A	24A	26
76411301A	019	21
76411361A	030	11
76411421A	018	32
76411431A	018	26
76411481A	28B	2
76411481A	28B	2
76411621A	029	12
76411711A	24A	22
76411851A	017	28

CODE	NO. TABLE	POS.
76411881A	034	2
76412061A	032	26
76412091A	027	6
76412101A	027	3
76440581A	016	3
76510071D	27B	7
76510081D	27A	24
76610553B	10A	2
76610841A	014	21
76610841A	015	21
768351134	002	10
77052508B	011	6
77110191A	020	5
77110191A	27A	16
77110391B	017	2
77110401B	24A	1
77110441A	28B	16
77110441A	28B	16
77110501A	021	10
77110518B	012	6
77110521A	012	7
77113691A	27A	14
77113731A	021	6
77113741A	021	1
77113801A	008	6
77113861A	012	5
77113961A	011	35
77116671AA	031	25
77140281A	023	12
77140653CC	016	7
77140713C	005	5
77140713C	011	19
77140723C	011	15
77140813C	005	3
77140833C	005	2
77140901A	023	10
77150078B	010	12
77150388B	034	17
77150408B	011	2
77150408B	017	23
77150408B	032	14
77150408B	18A	23
77150457E	032	13
77150458B	004	3

CODE	NO. TABLE	POS.
77150498B	020	16
77150653B	010	29
77150670ZF	002	3
77150723B	10A	11
77150738B	011	5
77150758B	010	30
77150808B	10A	8
77151250ZF	002	1
77151283B	018	33
77151363B	10A	6
77156413B	022	16
77156413B	032	1
77156413B	20A	5
77156623B	031	23
77156628B	018	38
77156633B	005	16
77156638B	025	7
77156638B	18A	30
77156688B	27A	6
77156693B	21A	16
77156723B	025	25
77157238B	025	2
77157268B	021	28
77157273B	021	18
77159418B	021	21
77210423C	24A	28
77210501C	28A	27
77210501C	28A	27
77210623B	031	1
77210841C	28A	5
77210841C	28A	5
77210852A	033	10
77210852C	017	21
77210853B	018	42
77210882B	019	16
77210893B	034	14
77210941C	028	2
77210943B	028	3
77210971A	030	16
77211021A	24A	25
77211061A	18B	9
77211091A	030	5
77211091C	030	18
77211251A	033	15

CODE	NO. TABLE	POS.
77213203B	020	20
77214061AA	18A	1
77214161AA	20A	3
77214221AA	28A	12
77214221AA	28A	12
77240253C	029	14
77240253C	28B	4
77240253C	28B	4
77240258C	018	22
77240263C	033	22
77240278C	18A	20
77240293C	034	15
77240403C	024	16
77240403C	18A	29
77240418C	027	19
77240418C	28B	23
77240418C	28B	23
77240423C	011	3
77240423C	019	35
77240438C	033	11
77240443C	24A	16
77240453C	034	1
77244168B	032	7
77244168B	18A	10
77244173B	18A	26
77244183B	018	1
77244213B	032	8
77244443B	018	2
77250341B	010	13
77250341C	008	22
77250988B	030	3
77251008B	018	9
77251043B	018	21
77251593B	018	29
77253268C	019	25
77253330ZF	012	18
77253988C	27A	17
77253988C	27B	11
77310071A	026	16
77350403B	013	23
77350618B	014	20
77350618B	017	9
77350618B	022	3
77350658B	010	31

CODE	NO. TABLE	POS.
77354743B	022	10
77355068B	019	7
77355203C	018	18
77355213C	22A	2
77440041A	020	17
77440041A	027	5
77440061A	28B	9
77440061A	28B	9
77440071A	019	18
77440101A	034	10
77440111A	24A	24
77440131A	029	10
77440141A	18A	5
77440171A	28A	31
77440213C	029	6
77440213C	18A	7
77440341A	018	35
77510311B	010	32
77510351A	030	10
77510511A	27B	1
77510541A	024	16
77550211B	10A	7
77550213C	026	36
77550213C	24A	5
77750493C	011	24
77850281A	021	33
77910262A	011	10
77910391A	010	33
77911092A	006	2
77911871A	008	25
77911982A	010	34
77912371A	025	18
77912741A	017	29
77913311D	024	6
77913662AB	025	4
77913662AB	24A	11
77913971A	024	3
77914041A	006	9
77914151A	024	10
77914211A	014	23
77914211A	015	23
77914651A	024	9
77914871C	28A	2
77914871C	28A	2

CODE	NO. TABLE	POS.
77915041A	028	6
77915093A	013	3
77915471A	006	4
77916041C	10A	18
77916081A	030	6
77916311A	011	36
77916411A	27A	19
77916411A	27B	13
77917241AA	22A	4
77917731AA	023	4
77917741AA	023	2
77918132A	002	7
77918141A	013	22
77918291AA	022	1
77918301AB	027	15
77918421AB	28A	7
77918421AB	28A	7
77918431AA	28A	6
77918431AA	28A	6
77918671AA	027	13
77918681AA	28B	1
77918681AA	28B	1
77918711BA	018	46
77919011AA	28B	26
77919021AA	28A	25
77919021AA	28A	25
77927171A	010	35
77950302A	013	16
77950621A	010	37
78010161A	006	3
78010511E	014	12
78010511E	015	12
78010921A	010	38
78020011A	019	26
78050012A	005	14
78050012A	011	32
78611224A	007	11
78611251A	007	13
78710111A	016	1
78810542A	012	4
78810931A	013	9
78811041A	18A	9
78811151A	010	14
78811211A	013	8

CODE	NO. TABLE	POS.
78811301A	017	19
79010211A	019	30
79111111A	032	16
79120521B	007	6
79710621E	004	1
79710641D	004	11
79910241A	27A	27
79910241A	27B	5
79910485A	019	31
79910491A	010	39
79910891C	22A	6
79914821A	002	20
79914851A	014	19
79914851A	015	19
79914861A	014	18
79914861A	015	18
79914991A	27A	25
79914991A	27B	14
79915061A	002	4
79915181B	014	26
79915181B	015	27
79915191B	014	27
79915191B	015	28
79915671A	005	17
79920881C	22A	7
79925771A	025	24
79940161B	023	5
79940171A	010	40
800070139	01A	5
80011841A	007	9
80011851A	007	8
80012301A	031	11
80012311A	031	5
80012321A	031	12
80012332A	031	17
80012341A	031	16
80610371B	027	18
80610381B	027	14
81110021A	010	15
81140012B	013	21
81411881A	015	25
81412361C	031	8
81413251A	032	17
81413261A	031	2

CODE	NO. TABLE	POS.
81413341A	017	10
81415251B	017	16
81510281A	010	41
81910601A	026	11
81910742AA	28A	24
81910742AA	28A	24
82110901B	021	11
82111701CA	025	16
82111701CA	27A	4
82112221B	014	17
82112221B	015	17
82112231B	014	15
82112231B	015	15
82112731A	025	23
82113331A	002	5
82113471A	012	8
82113571A	020	11
82113881A	002	13
82114571AA	018	25
82114581BA	018	17
82114611A	22A	9
82114642AA	27A	21
82114642AA	27B	9
82114711CA	033	3
82114741AA	026	23
82412282BB	27B	3
82412292AB	27A	20
82510501AA	28A	20
82510501AA	28A	20
82610261A	002	16
82610351BA	032	6
82714931A	020	15
82716031A	010	16
82716351A	013	20
82717201BA	025	12
82911901A	017	5
82912602A	22A	10
82916531A	016	6
82919611A	029	18
8291B271AA	023	13
8291B631B	018	30
8291B641C	18A	4
8291B651AA	020	8
8291B661BB	020	10

CODE	NO. TABLE	POS.
8291B771AA	18A	11
8291C091A	027	20
8291C141A	24A	23
8291C362A	033	5
8291C372A	033	7
8291C661D	18A	22
8291C861BA	025	11
83014401A	033	13
83015483A	28B	6
83015483A	28B	6
83015581B	011	30
83016241A	033	30
83018081AA	018	20
83018091AA	018	27
83018172AA	022	4
83018181AA	24A	13
83018221A	017	30
83018341B	24A	20
83018352AA	018	34
83018421BA	017	7
83018431AA	022	13
83018601DA	021	13
83018691A	024	15
83018731AA	020	2
83018872AA	18A	28
83018971A	030	8
83110151B	010	42
84010012A	014	1
84010012A	015	1
84010022A	014	1
84010022A	015	1
84010032A	014	1
84010032A	015	1
84010042A	014	1
84010042A	015	1
84010052A	014	1
84010052A	015	1
84010062A	014	1
84010062A	015	1
84010072A	014	1
84010072A	015	1
84010082A	014	1
84010082A	015	1
84010092A	014	1

CODE	NO. TABLE	POS.
84010092A	015	1
84010102A	014	1
84010102A	015	1
84010112A	014	1
84010112A	015	1
84010122A	014	1
84010122A	015	1
84010132A	014	1
84010132A	015	1
84010142A	014	1
84010142A	015	1
84010152A	014	1
84010152A	015	1
84010162A	014	1
84010162A	015	1
84010172A	014	1
84010172A	015	1
84010182A	014	1
84010182A	015	1
84010192A	014	1
84010192A	015	1
84010202A	014	1
84010202A	015	1
84010212A	014	1
84010212A	015	1
84010222A	014	1
84010222A	015	1
84010232A	014	1
84010232A	015	1
84010242A	014	1
84010242A	015	1
84010252A	014	1
84010252A	015	1
84010262A	014	1
84010262A	015	1
84010272A	014	1
84010272A	015	1
84010282A	014	1
84010282A	015	1
84010292A	014	1
84010292A	015	1
84010302A	014	1
84010302A	015	1
84010312A	014	1

CODE	NO. TABLE	POS.
84010312A	015	1
84010322A	014	1
84010322A	015	1
84010332A	014	1
84010332A	015	1
84010342A	014	1
84010342A	015	1
84010412B	014	2
84010412B	015	2
84010422B	014	2
84010422B	015	2
84010432B	014	2
84010432B	015	2
84010442B	014	2
84010442B	015	2
84010452B	014	2
84010452B	015	2
84010462B	014	2
84010462B	015	2
84010472B	014	2
84010472B	015	2
84010482B	014	2
84010482B	015	2
84010492B	014	2
84010492B	015	2
84010502B	014	2
84010502B	015	2
84010512B	014	2
84010512B	015	2
84010522B	014	2
84010522B	015	2
84010532B	014	2
84010532B	015	2
84010542B	014	2
84010542B	015	2
84010552B	014	2
84010552B	015	2
84010562B	014	2
84010562B	015	2
84010572B	014	2
84010572B	015	2
84010582B	014	2
84010582B	015	2
84010592B	014	2

CODE	NO. TABLE	POS.
84010592B	015	2
84010602B	014	2
84010602B	015	2
84010612B	014	2
84010612B	015	2
84010622B	014	2
84010622B	015	2
84010632B	014	2
84010632B	015	2
84010642B	014	2
84010642B	015	2
84010652B	014	2
84010652B	015	2
84010662B	014	2
84010662B	015	2
84010672B	014	2
84010672B	015	2
84010682B	014	2
84010682B	015	2
84010692B	014	2
84010692B	015	2
84010702B	014	2
84010702B	015	2
84010712B	014	2
84010712B	015	2
84010722A	014	1
84010722A	015	1
84010722B	014	2
84010722B	015	2
84010732A	014	1
84010732A	015	1
84010732B	014	2
84010732B	015	2
84010742B	014	2
84010742B	015	2
84010752B	014	2
84010752B	015	2
84010762B	014	2
84010762B	015	2
84010772B	014	2
84010772B	015	2
84010782B	014	2
84010782B	015	2
84010792B	014	2

CODE	NO. TABLE	POS.
84010792B	015	2
84010802B	014	2
84010802B	015	2
84010812B	014	2
84010812B	015	2
84010822B	014	2
84010822B	015	2
84010832B	014	2
84010832B	015	2
84010842B	014	2
84010842B	015	2
84010852B	014	2
84010852B	015	2
84010862B	014	2
84010862B	015	2
84010872B	014	2
84010872B	015	2
84011082A	014	1
84011082A	015	1
84011092A	014	1
84011092A	015	1
84011102A	014	1
84011102A	015	1
84011112A	014	1
84011112A	015	1
84011122A	014	1
84011122A	015	1
84011132A	014	1
84011132A	015	1
84011142A	014	1
84011142A	015	1
84740021A	27A	28
84740021A	27B	4
84740061A	010	43
84850011A	27A	13
84850021A	27A	9
85010151A	025	19
85040381A	018	6
85040381A	019	4
85040381A	18A	31
85040381A	28B	24
85040381A	28B	24
85040471A	033	16
85040471A	034	6

CODE	NO. TABLE	POS.
85040471A	18A	25
85040471A	28B	20
85040471A	28B	20
85040551A	018	24
85040551A	019	13
85040551A	030	14
85040551A	033	19
85040561A	018	13
85040561A	033	1
85040671A	027	16
85040671A	18B	16
85041031A	033	24
85041041A	022	19
85041051A	022	18
85041121A	034	3
85041421A	028	4
85041711A	18A	6
85041951AA	018	8
85110041A	003	13
85110131A	008	14
85110191A	006	12
85210051A	002	14
85210491B	021	26
85210532A	010	44
85210532A	025	22
85210532A	27A	7
85210541B	019	22
85210721B	019	15
85210941A	002	19
85211031A	021	32
85211201A	010	45
85211351A	005	10
85211721A	011	7
85211761A	020	6
85211911A	031	27
85211951A	016	4
85212221A	026	6
85212541A	002	17
85212561A	002	21
85212691A	006	7
85213011A	010	2
85213021A	009	6
85213021A	010	46
85213282A	004	8

CODE	NO. TABLE	POS.
85213681A	019	11
85213741AA	28A	32
85240211A	029	7
85241711A	027	4
85241711A	030	9
85241711A	28B	8
85241711A	28B	8
85241731A	019	19
85250011C	28B	19
85250011C	28B	19
85250051A	009	5
85250231A	014	28
85250231A	015	20
85250231A	017	8
85250241A	005	7
85250241A	011	21
85250241A	024	4
85250241A	025	3
85250241A	10A	16
85250241A	24A	12
85250261A	011	25
85250261B	014	11
85250261B	015	11
85250401A	021	23
85250421A	010	47
85250481A	011	34
85250601A	018	28
85310021A	008	8
85310031A	012	2
85310031A	10A	13
85350101A	018	37
85350101A	18B	11
85550001B	18B	10
85610011A	003	6
85610141A	004	13
85610623A	008	19
85610642A	10A	3
85610743A	013	4
85611481A	010	48
86010051B	10A	12
86050061A	010	49
86050061A	014	24
86050061A	015	24
86150251A	033	29

CODE	NO. TABLE	POS.
86610361A	18A	24
86610731A	18A	18
86611001A	021	37
86611121A	24A	8
86611521A	027	10
86611611A	18A	12
86611681A	018	15
86611692B	020	9
86611701A	033	21
86611721C	032	2
86611731A	18A	21
86611751C	033	2
86611811A	033	6
86611871A	033	34
86611881A	033	33
86611891A	033	32
86611981A	18A	13
86611991A	017	14
87210281A	021	17
87210532A	18B	6
87210641A	18B	8
87210901A	033	31
87210912A	022	21
87210922A	022	20
87210941A	022	8
87210951A	022	7
87240921A	030	13
87310051A	013	13
87310371A	009	2
87321271A	011	37
87511801A	010	50
87610581A	031	21
87611211A	029	4
87611221B	029	9
87611232A	029	2
87710381A	025	8
87711571A	016	2
88110101C	012	12
88110261A	004	2
88110461A	031	14
88110671A	002	23
88110931A	020	25
88110961A	020	26
88150011A	002	22

CODE	NO. TABLE	POS.
88210031A	008	11
88440061A	026	29
88450031A	019	33
88450031A	021	15
88450031A	27A	22
88450031A	27B	6
88450131A	005	11
88450341B	005	21
88450341B	28A	22
88450341B	28A	22
88450371A	009	4
88450371A	010	52
88450431A	011	8
88450511A	002	15
88450661A	018	16
88610241A	10A	15
88610951A	011	22
88640331A	010	53
88641031A	031	3
88641161A	025	17
88641161A	27A	5
88641181A	10A	5
88641321A	005	12
88641321A	10A	9
88641731A	011	38
88641961A	010	36
88642231A	017	27
88650131A	010	54
88650511A	013	1
887130137	001	1
887130869	001	8
887130870	001	12
887130944	001	7
887130957	01A	9
887130958	01A	10
887131058	01A	7
887131062	01A	3
887131074	01A	4
887131096	01A	8
887131749	001	22
887131805	001	10
887131806	001	16
887131821	001	19
887131920	001	24

CODE	NO. TABLE	POS.
887131994	001	4
887132011	001	17
887132092	001	14
887132409	01A	6
887132442	001	9
887132556	001	28
887132676	001	2
887132834	001	23
887132861	001	29
887132863	001	3
887132870	001	30
887132877	001	31
887132878	001	15
887132906	001	6
887133219	001	32
887133220	01A	1
887133334	001	21
887133367	001	26
887133497	001	33
887134145	001	36
887134189	001	37
887134198	001	13
887134284	001	11
887134285	001	35
887134286	001	20
887134411	001	25
887134513	01A	2
887651000	001	27
887651005	001	27
887651006	001	27
887651298	001	18
887651523	001	5
887651623	001	34
89310143A	031	24
89320062A	010	55
89320121A	005	15
89340051A	025	5
89340091A	024	20
89420121E	009	3
89520072A	032	15
91372621A	027	17
91372621B	027	17
91372621C	027	17
91372621D	027	17

CODE	NO. TABLE	POS.
91372621E	027	17
91372621F	027	17
91372621G	027	17
91372621L	027	17
91372621T	027	17
92610051A	027	12
93010041B	021	30
93040211A	005	9
93040221A	010	56
93040391A	026	14
93040931A	010	51
93041231A	010	28
93041501A	026	18
93041591A	005	19
93050051A	011	26
93050062B	011	28
93050071A	013	17
93050121A	28A	14
93050121A	28A	14
93410161A	032	21
93410212A	031	19
937831524	011	18
942470014	011	12
942470014	10A	1
979000252	01B	1
979000253	01B	2
979000254	01B	3
979000255	01B	4
979000256	01B	5

Ducati Motor Holding S.p.A.
Uffici Commerciali Amministrativi:
Via A. Cavalieri Ducati n. 3
40132 Bologna, Italy
Telefono 051 6413111
Fax 051 406580
Internet www.ducati.com